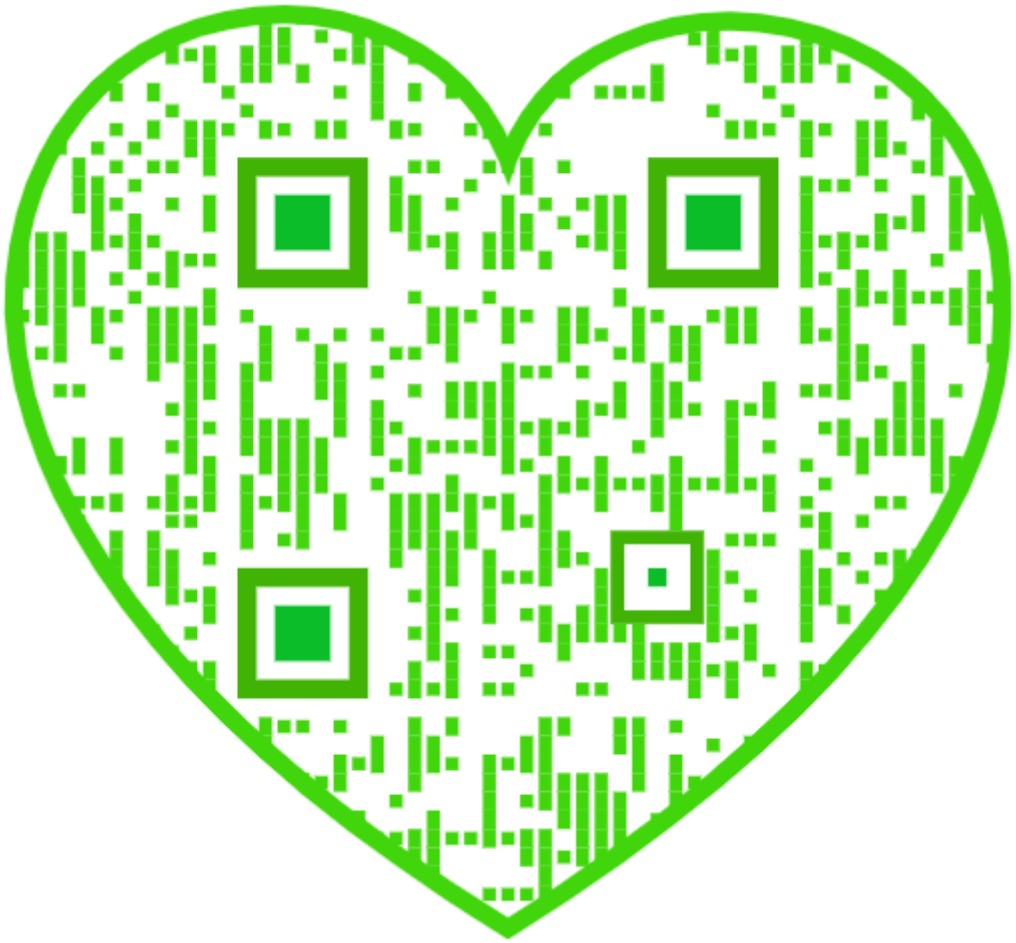

A TEXTBOOK

ON

MINING ENGINEERING

INTERNATIONAL CORRESPONDENCE SCHOOLS
SCRANTON, PA.

PRELIMINARY OPERATIONS AT METAL MINES
METAL MINING
SURFACE ARRANGEMENTS AT METAL MINES
ORE DRESSING AND MILLING

WITH PRACTICAL QUESTIONS AND EXAMPLES

.097

SCRANTON
INTERNATIONAL TEXTBOOK COMPANY
A-3

THE NEW YORK
PUBLIC LIBRARY
721598
ASTOR, LENOX AND
TILDEN FOUNDATIONS
R 1916 L

Copyright, 1899, by THE COLLIERY ENGINEER COMPANY.
Copyright, 1900, by THE COLLIERY ENGINEER COMPANY,
under the title of The Elements of Mining Engineering.

Preliminary Operations at Metal Mines: Copyright, 1899, by THE COLLIERY ENGINEER COMPANY.

Metal Mining: Copyright, 1899, by THE COLLIERY ENGINEER COMPANY.

Surface Arrangements at Metal Mines: Copyright, 1899, by THE COLLIERY ENGINEER COMPANY.

Ore Dressing and Milling: Copyright, 1898, 1899, by THE COLLIERY ENGINEER COMPANY.

All rights reserved.

NEW YORK
PUBLIC
LIBRARY

bVI

BURR PRINTING HOUSE,
FRANKFORT AND JACOB STREETS,
NEW YORK.

CONTENTS.

PRELIMINARY OPERATIONS AT METAL MINES.	*Section.*	*Page.*
Exploration and Development Work . .	40	1
Methods of Exploration	40	2
Methods of Opening Up Deposits . . .	40	5
Relative Advantages of Different Forms of Opening	40	7
Shafts and Shaft Linings	40	13
Shaft Timbering	40	18
Masonry and Metal Shaft Linings . . .	40	36
Tunnels and Tunnel Linings	40	42
Tunnel Linings	40	44
Removal of Excavated Material from Tunnels	40	53
Swelling Ground in Tunnels	40	54
Precautions To Be Taken in Wet Formations	40	59
Inclines or Slopes	40	59
Timbering for Inclines	40	65
Special Methods of Shaft Sinking . . .	40	66
Forepoling	40	66
Metal Linings Forced Down	40	67
Pneumatic Method of Shaft Sinking . .	40	66
The "Poetsch" or Freezing Method . .	40	75
The "Kind-Chaudron" Method . . .	40	84
The Continuous or "Long Hole" Method	40	93
The Comparison of the Different Special Methods of Shaft Sinking	40	93
METAL MINING.		
Methods of Mining	41	1
Open Work	41	2
Closed Work	41	12

METAL MINING—*Continued.*	*Section.*	*Page.*
Methods of Extraction	41	16
Narrow Veins or Lodes	41	16
Narrow Flat Deposits	41	24
Wide Veins, Large Masses, or Irregular Deposits More Than 8 Feet Thick	41	26
Irregular Deposits of a More or Less "Pockety" Character	41	57
Special Methods	41	59
Breaking Ground (Blasting)	41	65
Mine Timbering and Underground Supports	41	101
Timbering	41	101
Narrow Deposits	41	101
Square Sets	41	104
Miscellaneous Timbering	41	115
Metal and Masonry	41	125
Ventilation of Metal Mines	41	129
Natural Ventilation	41	133
Assisted Natural Ventilation	41	137
Artificial Means of Ventilation	41	142
Mine Sanitation	41	147
Underground Precautions	41	147
Surface Precautions	41	148
SURFACE ARRANGEMENTS AT METAL MINES.		
Introductory	42	1
Arrangement of Hoisting Plant, Head-Frames, Pockets, Bins, etc.	42	2
Transportation of Ore and Supplies	42	22
Timber Yard, and Means for Preparing and Handling Timber	42	27
Power and Light Plant, and Transmission of Power	42	32
Plant for Preparing or Treating Ore	42	36
General Arrangement of Buildings for the Prosecution of the Work	42	37
Framing of Timber Structures	42	39

ORE DRESSING AND MILLING.	*Section.*	*Page.*
Crushing	43	1
Crushing Machinery	43	2
Commuting Machinery	43	10
Automatic Feeders	43	56
Sizing and Classifying Machinery	43	61
Sizing Machinery	43	63
Classifying Machinery	43	67
Settling Boxes	43	77
Concentrating Machinery	43	80
Jigs	43	82
Buddles	43	101
Bumping Tables	43	116
Vanning Machines	43	119
Dry Concentrators	43	134
Magnetic Concentrators	43	136
Miscellaneous Concentrators	43	139
Amalgamation	43	143
Amalgamating Apparatus	43	150
Primitive Amalgamation	43	150
Modern Amalgamating Machinery	43	156
Amalgamating Pan	43	156
Barrel Amalgamation	43	180
Amalgamating Stamp Battery	43	183
Huntington Mills	43	197
General Mill Arrangement	43	203
General Arrangement of Buildings and Apparatus	43	205
Amalgamating Mills	43	207
Concentrator Mills	43	209
Miscellaneous Apparatus for Mills	43	214
Special Examples of Concentration	43	218
Concentration and Preparation of Copper Ores	43	218
Concentration of Lead Ores	43	222
Concentration of Zinc Ores	43	222
Concentration of Tin Ores	43	223
Concentration of Mercury	43	223

ORE DRESSING AND MILLING—*Continued.* *Section.* *Page*

Concentration and Preparation of Iron Ores 43 223
Preparation of Salt 43 229
Points To Be Observed in Designing Concentration Works 43 230

QUESTIONS AND EXAMPLES. *Section.*

Preliminary Operations at Metal Mines . . 40
Metal Mining 41
Surface Arrangements at Metal Mines . . 42
Ore Dressing and Milling 43

INDEX.

NOTE.—All items in this index refer first to the section (see the Preface) and then to the page of the section. Thus, "Bent, 42 39" means that bent will be found on page 39 of section 42.

A.	Sec.	Page.
Adapting the explosive to the work	41	99
Adit or tunnel in the vein, Advantages and disadvantages of	40	9
Advance holes from tunnels	40	59
" in a level shaft or heading by one blast	41	77
Advantage of draining the ground in tunnels	40	59
Advantages of having men pass through a downcast	41	136
Advantages of using machine-framed timber	41	113
Advantages of the different forms of openings, Relative	40	7
Advantages of overhead stoping	41	23
Aerial tramway	42	25
Agitators for amalgamating mills	43	172
Air-boxes, Wooden	41	139
Air, Compressed, Transmission of power by	42	32
" doors	41	139
Air-lock, Auxiliary	40	70
" for caisson, Example of	40	71
" " pneumatic caisson	40	69
Air vitiation, Causes of	41	130
Allis classifier	43	71
Alsing pulverizer	43	50
Amalgam, Devices for saving	43	193
" Losses of	43	150
" retorts	43	199
" strainers and safes	43	198
Amalgamating apparatus	43	150
" Cazo for	43	155
" Chemicals for	43	164
" Fondon for	43	155
" machinery, Modern	43	156
Amalgamating mills	43	207
" mortar for stamps	43	184
" pan	43	156
" " Berden	43	180
" " Boss	43	163
" " Varney	43	161
" " Wheeler	43	159
Amalgamating pans, Fountain and Stephenson	43	162
Amalgamating pans, Heating of	43	157
Amalgamating pans, Horn, Greely, Patton, and McCone	43	161
Amalgamating pans, Primitive	43	155
Amalgamating plates, Preparing	43	187
Amalgamating plates, Sweating	43	190
Amalgamating stamp battery	43	183
" Tina for	43	156
Amalgamation	43	143
" Barrel	43	180
" Boss continous process of	43	173
" Patio process for	43	152
" Primitive	43	150
" Roasting of ore for	43	182
Amalgamator, Atwood's	43	196
" Huntington mill as an	43	197
Ammonia gas, Properties of	40	76
Amount of explosive for a blast	41	67
" " material to be removed from a tunnel	40	50
Angle of inclines	40	63
Apparatus, Amalgamating	43	150
Apron plates	43	186

	Sec.	Page.
Arrangement of blast holes for driving and sinking	41	76
Arrangement of hoisting plant, head-frames, pockets, bins, etc.	42	2
Arrangement of shaft compartments	40	14
Arrastra for amalgamating	43	151
Artificial means of ventilation	41	142
Aspirator for removing excavated material from caisson.	40	71
Assisted natural ventilation	41	137
Atwood's amalgamator	43	196
Automatic feeders	43	56

B.	Sec.	Page.
Back-acting steam shovel	41	8
Back of ore, Caving of	41	45
" stopes, Blasting in	41	84
Ball mill, Alsing	43	50
" " Fraser and Chalmer	43	51
" " Globe	43	54
" " Krupp-Grusonwerk.	43	48
" pulverizers	43	48
Bark, Removing, from timber.	42	27
Barrel amalgamation	43	180
Barrels, Clean-up	43	180
Batea	43	139
Battery blocks for stamps	43	31
" for blasting	41	91
" plates	43	185
Bazin centrifugal amalgamator	43	197
Beams, Steel, to support linings	41	127
Bedding planes, Influence of, on blasting	41	75
Beds or veins cropping to the surface, Methods of opening.	40	5
Belt elevators	43	214
" vanners	43	122
Bent	42	39
Bents framed for trestles	42	42
Berden pan for amalgamation	43	180
Bins, Arrangement of	42	12
Black powder	41	95
" " Charging a hole with	41	85
Blake crusher	43	4
Blast, Force of an explosion and its value as a	41	66
Blast holes, Arrangement of, for driving and sinking	41	76
" " Diameter of	41	77
" " Most efficient position in which to drill	41	71
Blast, Resistance to be overcome by	41	67
Blasts, Comparative effects of.	41	69
" Connecting up and firing by electricity	41	93
" Remarks on firing by electricity	41	94
Blasting	41	65
" Battery for	41	91
" Electric	41	90
" Gelatine	41	98
" in big back stopes	41	84
" Influence of fissures or joints and bedding planes on	41	75
" of building stone	41	99
" Operations necessary for	41	65
Blowers as ventilators	41	143
Blowing down caisson	40	78
Boards, Breast, in a tunnel	40	49
" " " shaft	40	34
Bolt, Hanger, for square sets.	40	26
Boss amalgamating pan	43	163
" continuous process of amalgamation	43	173
Boulders, Removal of, from caisson	40	71
Box screens	43	65
Boxes, Settling	43	77
Braces, Special, and sprags	40	50
Brattices	41	137
Breast-boards in a tunnel	40	49
" " shaft	40	34
Breast caps and posts	41	57
" " " "	41	104
" " " " for tunnels	40	44
" Overhead, Stope carried as an	41	20
"Breaking cups," Cast-iron, for crushing rolls	43	11
Breaking ground (Blasting)	41	65
Bridged sets	40	47
Bridging or false sets for tunnels	40	55
Buddle, Collom	43	107
" Evans	43	108
" Linkenbach	43	111
" Paine and Stephens	43	103
Buddles	43	101
" Inward flow	43	106
" Multiple deck	43	109
" Outward flow	43	107
" Revolving	43	105
" Stationary	43	102

	Sec.	Page.
Building stone, Blasting of....	41	99
Buildings and apparatus, General arrangement of, for mill.....	43	205
" Arrangement of, at mine	42	38
" Framing of	42	44
" General arrangement of, at mine...	42	37
Bulk of an explosive.....	41	98
Bullion, Melting of.....	43	203
Bulling holes	41	76
Bumping table, Gilpin County	43	117
" " Side, Rittinger	43	118
" " Perfection concentrator	43	118
Bumping tables.....	43	116
Buntons for square sets.....	40	26

C.	Sec.	Page.
Cage guides.....	40	41
Caisson, Blowing down.....	40	73
" Pneumatic, Example of.....	40	67
" Tapered form of.....	40	73
" Water-tight joint for.	40	72
California stamp battery	43	86
Calumet classifier.....	43	75
Cams for stamps	43	18
Cap, Placing of, for electric blasting	41	92
Cars for use in tunnels.....	40	54
" Mine, Self-dumping	42	21
" Scoop.....	42	22
Cases when men should pass through an upcast.....	41	137
Cast-iron "breaking cups" for rolls	43	11
" posts	41	127
Causes of air vitiation	41	130
Caving a back of ore.....	41	45
" all the ore between two levels.....	41	49
" and filling methods, Safety of men in.....	41	52
" Rooming and	41	52
" Rooming and, Advantages and disadvantages of	41	55
" system of mining.....	41	41
Cavity, Form of, formed by an explosion	41	67
Cazo amalgamating pans.....	43	155
Cement packing behind tubbing in Kind-Chaudron system	40	91
Center-cut in the heading	41	78
Central hoisting plants.....	42	4
" power plant	42	34
Centrifugal dry concentrator.	43	134
" roller mills	43	43
Challenge feeder.....	43	59
Chamber and pillar system carried to great depths.....	41	62
Change house.....	41	148
Character of an explosive.....	41	67
" " filling material..	41	40
" " ore, Effect of, on mining methods	41	56
" " ore, Influence of, on mining openings	40	12
" " walls	41	56
Charging a hole with black powder..	41	85
" " " with high explosive	41	88
" of mercury in battery	43	192
Chemicals, Charging of, in amalgamating...	43	165
" for amalgamating	43	164
Chilian mill for amalgamating	43	150
" " Modern	43	41
Chimneys for ventilation.....	41	140
Circular shafts, Timbering for.....	40	34
Classifier, Allis.....	43	71
" Calumet	43	75
" Cone	43	73
" Trough	43	75
Classifying and sizing machinery	43	61
" machinery.....	43	67
Classes of deposits	40	2
Clausthal, Tunnels at.....	40	43
Clay dam in shaft.....	40	31
Cleaning amalgamating plates	43	189
Clean-up barrels for amalgamating mills.....	43	180
" pans.....	43	179
Closed work in mining.....	41	12
Coarse ore, Pocket stop for....	42	9
Cogs or pillars of timber	41	115
Collar braces for tunnel sets...	40	51
Collom buddle.....	43	107
" jig.....	43	93
Comminuting machinery.....	43	10
Comparative effects of blasts..	41	69
Comparison of the different special methods of shaft sinking	40	93

	Sec.	Page.
Compartments, Size and number of, in shafts	40	18
Compartments, Shaft, Arrangement of	40	14
Compressors as ventilators	41	143
Concentrating apparatus, Divisions of	43	81
" machinery	43	80
" mills	43	209
Concentrating works, Points to be observed in design of	43	230
Concentration and preparation of copper ores	43	218
Concentration and preparation of iron ores	43	223
" of lead ores	43	222
" " mercury	43	223
" " tin ores	43	223
" " zinc ores	43	222
" Points to be observed with copper ores	43	221
" Special examples of	43	218
Concentrator, Duncan	43	141
" Embrey	43	131
" Hendy	43	140
" Triumph	43	133
" Woodbury	43	134
Concentrators, Dry	43	134
" Magnetic	43	136
Cone classifier	43	73
Connecting up and firing blasts by electricity	41	93
Continuous or long hole method of shaft sinking	40	93
Copper minerals, Concentration of	43	220
" Native, Concentration of	43	219
" ores, Concentration of	43	218
" " Points to be observed in concentration of	43	221
Corbels	42	48
Cornish and Hartz water-blowers	41	143
" pumping plant	42	34
Cornwall, Tunnels in	40	43
Corrugated plates	43	194
Cradle, Dumping	42	19
Crawls	43	217
Cribbing	40	19
" for a raise	41	117
" " large shafts	40	22
" " small shafts in good ground	40	23
Cribbing, Joint for, to resist heavy pressure	40	21
" of 3-inch plank	40	23
" " light sawed material	40	21
Cross-cut tunnel through country rock, Advantages and disadvantages of	40	9
Cross-cut tunnel through country rock, Advantages and disadvantages of	40	10
Crusher, Roller jaw	43	6
Crushers, Comparison of gyratory, with jaw	43	10
" Gyratory	43	8
" Jaw	43	3
" Miscellaneous	43	54
" Multiple jaw	43	6
Crushing	43	1
" machinery	43	2
" Wet and dry	43	2
Cummings mill	43	55
Cut-holes or key-holes	41	77

D.	Sec.	Page.
Dam, Clay in shaft	40	31
Dapping	42	39
Debris, Removal of, in Kind-Chaudron system	40	88
Decay of timbers	41	132
Deposit, Inclination of	41	15
" or vein, Influence of width of	41	14
Deposits, Classes of	40	2
" Flat	40	4
" having a low value per ton, Methods of mining	41	59
" more than 8 feet thick, Methods of mining	41	26
" Narrow flat, Methods of mining	41	24
" not cropping to the surface, Methods of opening	40	6
Detonation, Firing by	41	86
Development work, Exploration and	40	1
Development work, General principles of horizontal and connection	41	14
Devices for saving float gold in amalgam	43	193
Diagonal braces for tunnel sets	40	51
Diamagnetic	43	136

	Sec.	Page.
Diameter of blast hole, Relation of, to line of least resistance	41	73
" " hole, Relation of, to length of charge.	41	75
Dies for stamps	43	17
Differential pulleys	43	216
Dingey pulverizer	43	55
Discharge, Height of, in mortars	43	27
" of stamps, Height of	43	27
" " tailings without water	43	216
" pipe for jig	43	97
Distance between sets	40	51
Divisions of freezing process	40	77
" " mine sanitation	41	147
Dodge crusher	43	5
Dolly tub	43	115
Doors, Air	41	139
" Trap, Angle of	40	41
Downcast, Advantages of having men pass through	41	136
Drainage of tunnels	40	52
Drawbridges or trap doors for turning cars from inclines	40	63
Dressing amalgamating plates	43	189
Drift gravel mines	41	59
" Points to be observed in determining cross-section of a	41	117
" sets	41	57
" " Vertical posts in	41	116
Drifts and levels, Placing of, in flat deposits	41	24
" Timbering of	41	115
Drilling in tunnels	40	44
Drip boards in shaft	40	35
Driving a tunnel by wedging	40	49
" and sinking, Arrangement of blast holes for	41	76
Drum screens or trommels	43	63
Dry concentrators	43	134
" crushing	43	2
" or change house	41	148
" placer miner, Woods	43	135
Dumping cradle	42	19
Dumps, Rock or ore	42	19
Duncan concentrator	43	141
Dust, Effect of, on ventilation.	41	131

E.	Sec.	Page.
Eccentric jigs	43	87
Effect of a blast	41	65
" " explosives on air	41	131
Effect of firing several holes simultaneously	41	74
Electric blasting	41	90
" pumping plant	42	35
" transmission of power	42	32
Electricity, Remarks on firing blasts by	41	94
Elevators for mills	43	214
" Sand wheels as	43	215
Embrey concentrator	43	131
End plate for square sets	40	26
Engines, Traction	42	27
Eureka rubber	43	196
Evans buddle	43	108
Example of pneumatic caisson	40	67
Examples of masonry lining	41	126
Excavated material, Removal of, from caisson	40	70
" material, Removal of, from tunnels	40	53
Excavation, Process of, in Kind-Chaudron system	40	84
Exhaust fans	43	218
Exploration and development work	40	1
" Methods of	40	2
" of "pockety" deposits	40	5
" " uniform deposits	40	8
" " vein	40	11
Exploder, Electric	41	90
Explosion, Force of, and its value as a blast	41	66
" Products of	41	99
Explosive, Adapting or, to the work	41	99
" Amount of, for a blast	41	67
" Bulk of	41	98
" Character of	41	67
" Charging a hole with high	41	86
" gases	41	132
" Maximum pressure possible	41	71
" Plasticity of	41	99
" Power of an	41	66
Explosives	41	95
" Comparative values of	41	69
" Effect of, on air	41	131
" High	41	96
" Pressure developed by	41	68

	Sec.	Page.
Explosives, Tamping for high.	41	76
" Useful work performed by	41	69
P.	**Sec.**	***Page.***
False sets or bridging for tunnels	40	55
" walls or horses	40	4
Fans as ventilators	41	145
" Exhaust	43	218
" Ventilating, Classes of	41	145
Feeder, Challenge	43	59
" Roller	43	57
" Tulloch	43	58
Feeders, Automatic	43	56
Filling and caving methods, Safety of men in	41	52
" Longitudinal, back-stoping with	41	33
" material, Character of.	41	40
" methods of mining	41	29
" system, Advantages and disadvantages of	41	40
" Transverse rooming with	41	38
Financial resources, Influence of	40	13
Firing blasts by squibs	41	86
" by detonation	41	86
Fish-plates	42	45
Fissures or joints, Influence of, on blasting	41	75
Flat deposits	40	4
" " Method of attack	41	25
Float gold	43	146
" " Devices for saving.	43	193
Fondon for amalgamating	43	155
Floor, Picking	42	14
" Temporary, Protection by, while sinking	40	18
Floors and pillars, Attempts to remove, in square-work system	41	63
Flouring of mercury	43	146
Fluids, Laws of pressure in	41	69
Flumes and chutes for ore	42	24
Foot or heel braces for tunnel sets	40	51
Force of an explosion and its value as a blast	41	66
Forepoling for shaft sinking	40	66
" for shaft sinking, Objections to	40	66
" in shaft	40	31
Form of cavity formed by an explosion	41	67
" " shaft	40	14
Form of tunnels	40	43
Forms of joints for square-set timbering	41	108
Foundation for head-frame (gallows-frame)	40	15
Foundations for trestles	42	42
Fountain amalgamating pan	43	162
Frames for stamps	43	21
Framing of buildings	42	44
" " trestles	42	39
" timber, Place for	42	20
" " structures	42	39
Fraser and Chalmers ball mill	43	51
Freezing by means of gas	40	76
" Principles of	40	75
" process, Amount of ground frozen in	40	82
" process, Connection of tubes for	40	79
" process, Divisions of	40	77
" process, Example of	40	81
" process, Method of placing tubes for	40	79
" process of shaft sinking	40	75
" process of shaft sinking, Advantages of	40	94
" process of shaft sinking, Uses of	40	78
" process, Position of tubes in	40	84
" process, Possible depths by	40	82
" process, Temperature of tubes in ground in	40	82
Freiberg or barrel amalgamation, Process of	43	180
" Tunnels at	40	43
Frogs for turning cars from tunnels	40	54
Frue vanner	43	122
" " Adjustments of	43	126
" " Corrugated belt	43	129
Furnace ventilation	41	143
Fuse, Lighting of	41	100
Fuses, Safety	41	85
G.	**Sec.**	***Page.***
Gaining	42	89
Gallows-frame, Foundation for	40	15
Gas, Ammonia, Properties of	40	76
" Converting of, to a liquid	40	75
" Freezing by means of	40	76
" Marsh	41	132
Gases, Explosive	41	132

	Sec.	Page.
Gases resulting from the lights.	41	130
Gate as a pocket stop	42	9
Gauge of tracks	42	22
Gelatine, Blasting	41	98
General arrangement of mill	43	203
General principles of underground development	41	12
" principles of ventilation	41	134
Gilpin County bumping table.	43	117
" " stamp battery	43	39
Girts or buntons for square sets	40	26
Globe ball mill	43	54
Gold, Float	43	146
" " Devices for saving	43	193
" Greasy	43	149
" in pyrites	43	147
" Losses of	43	146
" Non-amalgamable	43	147
" Rusty	43	148
Grade of tracks	42	24
" " tunnels	40	42
Greasy gold	43	149
Greely amalgamating pan	43	161
Green's jigger	43	96
Grizzlies	43	66
" Position of, in mills	43	205
Ground, Timbering for watery, loose	40	19
Guides, Cage	40	41
" for stamps	43	23
Gyratory crushers	43	8

H.	Sec.	Page.
Hand-rails	41	125
Hanger bolt for square sets	40	26
Hartz and Cornish water-blowers	41	143
" jig	43	87
Head-frame, Foundation for	40	15
Head-frames	42	5
" Steel	42	6
Heading, Center cut in	41	78
" Side cut in	41	83
" Square cut in	41	80
Heating of amalgamating pans	43	157
Heberle gate for jig	43	98
" mill	43	54
Heel or foot braces for tunnel sets	40	51
Hendy concentrator	43	140
High explosives	41	96
" " Charging a hole with	41	88
" " Tamping for	41	76
Height of discharge of stamps	43	27
" " rooms where roof is caved	41	54
Hobbies or prejudices	40	13
Hoisting plants, Central	42	4
" " Individual	42	2
" " "	42	34
" speed	40	19
Holes, Advance, from tunnels.	40	59
" Bulling	41	76
Hood or trap-doors	40	17
Horn amalgamating pan	43	161
" Silver silver-lead mine, Open cut	41	4
Horses, False walls or	40	4
Hose, Large cloth, for air	41	139
Housed shafts	41	140
House, Powder	42	38
Huntington mill	43	43
" " as an amalgamator	43	197

I.	Sec.	Page
Importance of ventilation	41	129
Inclination of deposit	41	15
Incline planes	42	23
Inclined shaft timbered with stulls, Station for	41	119
Inclines, Advantages and disadvantages of	40	7
" Angle of	40	63
" Location of stations in	40	62
" or slopes	40	59
" or slopes, Advantages and disadvantages of	40	60
" or slopes, Definition of	40	59
" " " Location of	40	60
" Size of opening	40	61
" Switches for turning cars from	40	63
" Timbering for	40	65
" Trap-doors or drawbridges for turning cars from	40	63
Individual hoisting plants	42	2
" " "	42	34
Influences disturbing natural ventilation	41	137
Interior shafts, Tunnels connected with	40	44
Inward-flow buddles	43	106
Iron, Cast, Posts of	41	127
" ores, Concentration and preparation of	43	223

	Sec.	Page.
Iron ores containing clay, Cleaning of	43	225
" " containing sulphur or carbonic acid.	43	229
Irregular deposits of a more or less "pockety" character	41	57

J.	Sec.	Page.
Jaw crushers	43	3
Jig, Collom	43	93
" discharges	43	96
" Green's	43	96
" Hartz	43	87
" Heberle gate discharge for	43	98
" Pipe discharge for	43	97
" Pneumatic	43	93
" products, Treatment of	43	213
" Quick-return Hartz	43	88
" Tailings discharge for	43	99
Jigs	43	82
" Reciprocating	43	96
" Slide	43	90
" Speed of	43	101
" Stationary screen	43	83
Joint, A simple one for sill and post for tunnels	40	52
" Cribbing, to resist heavy pressure	40	21
" Scarfed	42	44
" Water-tight, for caisson	40	73
Joints, Aim in framing	40	30
" Forms of, for square-set timbering	41	108
" or fissures, Influence of, on blasting	41	75
" One style of, for square sets	40	28

K.	Sec.	Page.
Keeves	43	112
Kettle-blasting	41	73
Key-holes or cut-holes	41	77
Kind-Chaudron system, Advantages of	40	92
Kind-Chaudron system, Cement packing behind tubbing in	40	91
Kind-Chaudron system, Mossbox for	40	90
Kind-Chaudron system of shaft sinking	40	84
Kind-Chaudron system of shaft sinking, Advantages of	40	94
Kind-Chaudron system, Process of excavation in	40	84
Kind-Chaudron system, Removal of debris from	40	88
Kind-Chaudron system, Tubbing or lining shaft in	40	89
Kinkead mill	43	45
Krom pneumatic jig	43	93
" rolls, Spring	43	13
Krupp-Grusonwerk ball mill	43	48

L.	Sec.	Page
Ladders and stations in shafts	40	20
" stairs, hand-rails, etc.	41	125
Lagging	42	29
" Support of, for square sets	40	27
Lake Superior trough separator	43	75
Large cloth hose for air	41	139
" shafts, Cribbing for	40	22
Lathes or spiles for square sets	40	32
Laws of pressure in fluids	41	69
Leaching of sulphur	41	65
" salt	41	64
Lead ores, Concentration of	43	222
Length of charge, Relation of diameter of hole to	41	75
Level or heading, Advance in, by blasting	41	77
Levels, Caving all the ore between two	41	49
" Connections between.	41	13
" for mines	41	12
" Placing of, in flat deposits	41	24
" Position and grade of.	41	13
Lighting the fuse	41	100
Lights, Gases resulting from the	41	130
Lined shaft compartments	41	139
Lining, Time for placing	40	18
Linings, Masonry, Examples of	41	126
" Shaft	40	13
" Tunnel	40	42
" "	40	44
Link-belt elevators	43	214
Linkenbach buddle	43	111
Lipman system of shaft sinking	40	92
Location of inclines or slopes	40	60
" " openings	40	11
Log washer	43	142
" washing plant	43	225
Long hole method of shaft sinking, Advantages of	40	95
" " or continuous method of shaft sinking	40	93

	Sec.	Page.
Longitudinal back-stoping with filling	41	33
Loose, watery ground, Timbering for	40	19
Losses of amalgam	43	150
" " gold	43	146
Low-grade ore, Pillars of	41	56
Lührig vanner	43	180

M.	Sec.	Page.
Machine-framed timber, Advantages of using	41	113
Machine shop	42	36
" timber framing	41	113
Machinery, Classifying	43	67
" Commuting	43	10
" Concentrating	43	80
" Crushing	43	2
" Modern amalgamating	43	156
" Sizing and classifying	43	61
Machines, Vanning	43	119
Magistral for use in patio process	43	153
Magnetic concentrators	43	136
Marsh gas	41	132
Masonry and metal linings, Comparison of	40	39
" " metal shaft linings	40	36
" Filling of space back of shaft linings	40	38
" linings, Examples of	41	126
" " General form of	40	36
" " Support of	40	37
" pillars, Example of	41	128
" shaft linings at metal mines	40	40
" " linings built at surface	40	38
" " linings supported from the surface	40	38
" supports	41	125
Masses, Large, Methods of mining	41	26
Material, Amount of, to be removed from a tunnel	40	50
" Disadvantage of having to hoist	40	16
" Excavated, Removal of, from caisson	40	70
Material, Removal of, during sinking	40	16
" Removal of excavated, from tunnels	40	53
" Soluble, Mining of	40	4
Maximum pressure an explosive can produce	41	71
McCone amalgamating pan	43	161
Melting of bullion	43	203
Men, Respiration of	41	130
" Safety of, in caving and filling methods	41	52
Mercury, Charging of, in amalgamating	43	166
Mercury, Charging of, in battery	43	192
" Concentration of	43	223
" Feed and loss for amalgamating batteries	43	191
" Flouring of	43	146
" Impurities in and losses of	43	144
" Properties of	43	143
" Sickening of	43	145
" system in Boss continuous process	43	178
" wells	43	195
Metal and masonry linings, Comparison of	40	39
" and masonry supports	41	125
" linings for small shaft	40	40
" " forced down for shaft sinking	40	67
" shaft linings	40	39
" " " at metal mines	40	40
" " " and masonry	40	36
" mines, Metal and masonry linings at	40	40
" mines, Surface arrangements at	42	1
" mines, Ventilation of	41	129
" pipes for air	41	139
Metallic shield for driving tunnels	40	59
Method of attack for flat deposits	41	25
Methods of extraction of ore	41	16
" " mining	41	1
" " " deposits having a low value per ton	41	59
" " " narrow flat deposits	41	24

	Sec.	Page.
Methods of opening up mineral deposits	40	5
" " exploration	40	2
Mill, Ball, Fraser and Chalmers	43	51
" Cummings	43	55
" Fall of ground for	43	205
" Heberle	43	54
" Huntington	43	48
" Kinkead	43	45
" site	43	208
" Sturtevant	43	55
Milling system, Advantages of	41	11
" " Output from	41	10
" " Open-cut mines worked by	41	9
Mills, Amalgamating	43	207
" Concentrating	43	209
" Roller	43	40
" " Centrifugal	43	43
Mine-cars, Self-dumping	42	21
Mine opening, Influence of character of ore on	40	12
" sanitation, Divisions of	41	147
" timbering and underground supports	41	101
" timber, Precautions to be taken in placing	41	114
Mines, Drift gravel	41	59
Mining, Caving system of	41	41
" " " "	41	52
" Closed work in	41	12
" Deciding upon system of	41	14
" Influence of character of ore on method of	41	15
" Influence of natural surroundings on method of	41	15
" methods, Effect of character of ore on	41	56
" methods, Effect of surface on	41	56
" methods, Filling	41	29
" methods, General remarks as to	41	56
" Rooming and caving system of	41	52
" Salt, Square-work system applied to	41	59
" Square-work system of	41	59
" systems in use	41	16
" tunnels, Some examples of	40	43
Mineral deposits, Methods of opening up	40	5
Miscellaneous forms of concentrators	43	139
" timbering	41	115
Modern Chilian mill	43	41
Molloy hydrogen amalgamator	43	197
Mortar amalgamating	43	184
Mortars, Double discharge	43	25
" for stamps	43	24
" Sectional	43	28
" Screens for	43	29
Mortise	42	39
Moss-box for Kind-Chaudron system	40	90
Most efficient position in which to drill blast holes	41	71
Mount Morgan gold mines, Open cut	41	4
Mud-sill	42	39
Multiple deck buddles	43	109
" jaw crushers	43	6

N.	Sec.	Page.
Narrow flat deposits, Methods of mining	41	24
" veins or lode, Mining methods for	41	16
Native copper	43	219
Natural ventilation	41	133
Natural ventilation, Advantages and disadvantages of	41	141
Natural ventilation, Assisted	41	137
Neighbors, Influence of workings of	40	12
Non-amalgamable gold	43	147
North of England caving system	41	41
Number of shafts necessary	40	14

O.	Sec.	Page.
Ontario mine tunnel, No. 2, Description of	40	55
Open-cut and stripping mines	41	2
" mines, Advantages and disadvantages of	41	7
" mines, Precautions to be taken in	41	8
" mines worked by the milling system	41	9
Opening, Location of	40	11
" Size of	40	12
Openings, Advantage of two	40	11
Open work, Methods of mining	41	2
Order of drop of stamps	43	31
Ore, Amount to be taken out	41	15
" bins, Location of, at mill	43	206

	Sec.	Page.
Ore, Character of, Effect of, on mining methods	41	56
" dressing and milling	43	1
" " plant, Power for	42	36
" dumps	42	19
" Excessive handling of	41	16
" Flumes and chutes for	42	24
" Picking of	42	13
" Plant for preparing and treating	42	36
" Quality of, obtained by rooming and caving	41	55
" Relation between character of, and transportation	42	24
" Requirements as to storage of	42	18
" stalls, Arrangement of	42	12
" Transportation of	42	22
Origin of square-set timbering	41	104
Outside work, Advantages of.	41	11
Outward-flow buddles	43	107
Overhead stope carried as a breast	41	20
" stoping	41	19
Overhead stoping, Advantages and disadvantages of	41	23
Overhead stoping, Advantages and disadvantages of	41	24
Overhead stoping from bottom of winze	41	21
Overhead stoping, Special timbering for	41	23
Overhead stoping without a winze	41	22

P.	Sec.	Page.
Paine and Stephens buddle	43	103
Pan, Amalgamating	43	156
Pans, Clean-up	43	179
Paramagnetic	43	136
Passing points for tunnels	40	54
Patent round-tenoned square-set timbering	41	112
Patio process	43	153
Patton amalgamating pan	43	161
Pentice	40	17
Percussion table, Side, Rittinger	43	118
Perfection concentrator bumping table	43	118
Picking floor	42	14
" of ore	42	13
Piles	42	39
" Stock	42	15
Pillars and floors, Attempts to remove, in square work	41	63
Pillars of low-grade ore	41	56
" Masonry, Example of	41	128
" Method of recovering, where roof is caved	41	54
Pillars or cogs of timber	41	115
Pipe discharge for jig	43	97
Placing a set in a tunnel	40	47
" of drifts and levels in flat deposits	41	24
" the cap for electric blasting	41	92
Planes, Incline	42	23
Plank cribbing	40	23
" lining for small shaft	40	24
Plant for preparing and treating the ore	42	36
Plasticity of an explosive	41	99
Plates, Amalgamating, Cleaning up and dressing	43	189
" Apron	43	186
" Battery	43	185
" Corrugated	43	194
" or sills	41	103
" Preparing amalgamating	43	187
" Shaking	43	193
" Step	43	193
" Swinging	43	196
Pneumatic caisson, Air-lock for	40	69
" " Example of	40	67
" jig	43	93
" method for tunneling	40	75
" method of driving tunnels	40	59
" " of shaft sinking	40	67
" " of shaft sinking, Advantages of	40	93
" " Possible depth by	40	75
" stamps	43	33
Pocket stop, Gate as	42	9
Pockets at shaft stations, Timbering for	41	120
" Ore, Arrangement of.	42	12
" " " "	42	13
"Pockety" deposits, Exploration of	40	5
Poetsch, or freezing, method of shaft sinking	40	75
Points to be observed in designing a concentrator	43	230

	Sec.	Page.
Points to be observed in determining the cross-section of a drift or tunnel	41	117
Polygonal shafts, Timbering for	40	34
" Timbering for shafts	40	34
Portion of the deposit recovered by square-work system	41	61
Posts and breast caps	41	104
" " " " for tunnels	40	44
" " " " or drift sets	41	57
" " rough square sets	41	103
" Cast-iron	41	127
" for square sets	40	26
" in center of tunnel	40	58
Powder, Black	41	93
" house and the handling of powder	42	38
" Storing of	41	96
" Thawing of	41	97
Powders, Safety	41	96
Power and light plant	42	32
" for ore-dressing plant	42	36
" of an explosive	41	66
" plant, Central	42	34
" Transmission of	42	32
" by rope, Transmission of	43	33
Precautions to be taken in driving tunnels through wet formations	40	59
Precautions to be taken in open-cut mines	41	3
Precautions to be taken in placing mine timber	41	114
Prejudices or hobbies	40	13
Preparation of salt	43	229
Preparing amalgamating plates	43	187
Pressure developed by explosives	41	68
Primitive amalgamation	43	150
Principles of freezing	40	75
Products of an explosion	41	99
Properties of mercury	43	143
Pulleys, Differential	43	216
Pulverizer, Dingey	43	55
Pulverizers, Ball	43	48
Pumping plant, Cornish	42	34
" " Steam, compressed air, or electric	42	35
Pumps, Sand	43	216
Pyrites, Gold in	43	147

Q.	Sec.	Page.
Quarrying, Open-pit mines worked by	41	4
Quick-return Hartz jig	43	88
Quicksilver, Properties of	43	143

R.	Sec.	Page.
Radial roller mills	43	40
Railroad connections at mine	42	37
Raise, Cribbing for	41	117
" Square-set timbering for	41	117
Raises	41	13
Reciprocating screen jigs	43	96
Regular deposits, Methods of mining	41	25
" deposits more than 8 feet thick, Methods of mining	41	26
Relation of diameter of blast hole to line of least resistance	41	73
" " diameter of blast hole to length of charge	41	75
Remarks on firing blasts by electricity	41	94
Removal of excavated material from tunnels	40	53
Resistance, Relation of diameter of blast hole to line of least	41	73
" to be overcome by a blast	41	67
Resources, Financial, Influence of	40	13
Respiration of men	41	130
Retorts, Amalgam	43	199
Revolving buddles	43	105
Rittinger side-percussion table	43	118
Roadbed for tracks	42	24
Roasting of ore for amalgamation	43	182
Rock breakers	43	2
" " Location of, in mill	43	206
" or ore dumps	42	19
Rogers rolls	43	13
Roller feeder	43	57
" jaw crusher	43	6
" mill, Schranz	43	41
" mills	43	40
" " Centrifugal	43	43

	Sec.	Page.
Rolls	43	11
" Cast-iron "breaking cups" for	43	11
" Rogers	43	13
" Safety devices against strains in	43	11
Rooming and caving	41	52
" " caving, Advantages and disadvantages of.	41	55
" Transverse, with filling	41	38
Rooms, Height of, where roof is caved	41	54
Rope transmission of power	42	33
Round logs, Cribbing of	40	19
" timbers for square sets	41	110
Rubber for cleaning amalgamating plates	43	188
Rusty gold	43	148

S.	Sec.	Page.
Saddlebacks	41	102
" or stull rooms	41	54
Safes, Amalgam	43	198
Safety fuses	41	85
" of men in caving and filling methods	41	52
" powders	41	96
" of workmen in tunnels	40	42
Salt, Leaching of	41	64
" mining by undercutters	41	63
" Preparation of	43	229
" Square-work system applied to mining	41	59
Sampling and assaying, System of	40	13
Sand pumps	43	216
" wheels	43	215
Sawed material, Light cribbing of	40	21
Scarfed joint	42	44
Schranz roller mill	43	41
" rock breaker	43	6
Scoop cars	42	22
Screen cloth	43	66
Screens	43	63
" for mortars	43	29
" Shaking or box	43	65
" Variable mesh	43	64
Screening, Wet and dry	43	66
Seasoning and treating of timber	41	124
" timber	42	27
Sectional mortars	43	28
" guides for stamps	43	23
Separator, Lake Superior trough	43	75
Sets, Bridged	40	47
" Distance between	40	51
Settling boxes	43	77
Settlers	43	169
Shaft, Advance in, by blasting	41	77
" and tunnel, Comparison of	40	10
" compartments, Lined	41	139
" Definition of	40	59
" Form of	40	14
" linings, Masonry and metal	40	36
" linings, Masonry, built at surface	40	38
" linings, Masonry, supported from surface	40	38
" linings, Metal	40	39
" L-shaped	40	34
" sinking, Continuous or long hole method of	40	93
" " Comparison or special methods of	40	93
" " Forepoling for	40	66
" " Kind Chaudron system of	40	84
" " Lipman system of	40	92
" " Metal linings forced down for	40	67
" " Pneumatic method of	40	67
" " Poetsch, or freezing, method of	40	75
" " Special methods of	40	66
" " Uses of freezing process for	40	78
" station, Timbering for	41	117
" stations, Timbering pockets at	41	120
" Templet for	40	15
" timbering	40	18
" " Special forms of	40	34
" timbers, Stability rather than strength required in	40	18
Shafts, Advantages and disadvantages of	40	8
" and shaft linings	40	13

	Sec.	Page.
Shafts, Circular, Timbering for	40	34
" Classes of	40	13
" Housed	41	140
" Number of necessary	40	14
" Polygonal, Timbering for	40	34
" Size and number of compartments in	40	13
Shaking plates	43	138
" screens or box screens	43	65
Sickening of mercury	43	145
Side-cut in the heading	41	88
Sills for square-set timbering	41	109
Simple tests of ventilation	41	135
Simultaneous firing of holes, Effect of	41	74
Sinking and driving, Arrangement of blast holes for	41	76
" " by hand	40	16
" Removal of material during	40	16
Size of opening	40	12
" " " for inclines	40	61
" " timbers for stopes	41	115
Sizes of timber in common use for tunnels	40	52
Sizing and classifying machinery	43	61
" machinery	43	63
Skip, Timber-balanced	42	31
Skips, Use of	40	11
Slide jigs	43	90
Slime table, Evans	43	108
Slopes or inclines	40	59
" " " Advantages and disadvantages of	40	60
" " " Definition of	40	59
Small shaft, Metal linings for	40	40
" " Plank linings for	40	24
" " Cribbing for, in good ground	40	23
Sollars	41	137
Soluble material, Mining of	40	4
Space back of masonry shaft linings, Filling of	40	38
Spanish shaly gold mine, Open-cut	41	4
Special form of timbering for swelling ground in tunnels	40	58
" methods of driving tunnels	40	59
" " " mining	41	59
Special methods of shaft sinking	40	63
" " " shaft sinking, Comparison of	40	93
" pocket stop for coarse ore	42	11
Special timbering for overhead stoping	41	23
Speed, Hoisting	40	19
Spiles or lathes for square sets	40	32
Spiling for tunnels	40	47
Spitzlutten	43	71
Splash-boards for stamps	43	26
Spitzkasten	43	68
Sprags and special braces	40	50
Square cut in the heading	41	80
Square-set timbering for a raise	41	117
" timbering for mines producing rich ore	41	109
" timbering, Forms of joints for	41	108
" timbering, Origin of	41	104
" timbering, Patent round-tenoned	41	112
" timbering, Sills for	41	109
Square sets	41	26
" "	41	104
" " Advantages of	40	25
" " End plate for	40	26
" " for tunnels	40	45
" " General description of	40	25
" " Girts or buntons for	40	26
" " One style of joints for	40	28
" " Placing of	40	47
" " Posts and rough	41	103
" " Round timbers for	41	110
" " Tail strip for	40	32
" " Wall-plate for	40	26
Square work, applied to comparatively thin seams	41	64
" " Attempt to remove pillars and floors in	41	63
" " carried to great depths	41	62
" " system applied to salt mining	41	59

	Sec.	Page.
Square-work system, Portion of deposit recovered by	41	61
Squibbing blast holes	41	73
Squibs, Firing blasts by	41	86
Stairs	41	125
Stalls, Arrangement of ore	42	12
Stamp batteries, Quick and slow drop	43	38
" battery, Amalgamating	43	183
" " California	43	38
" " Gilpin County	43	39
Stamps	43	15
" Battery blocks for	43	31
" Cams for	43	18
" Dies for	43	17
" Frames for	43	21
" Guides for	43	23
" Height of discharge of	43	27
" Mortars for	43	24
" Order of drop	43	31
" Pneumatic	43	38
" Steam	43	33
" Splash-boards for	43	26
" Tappets for	43	20
Starting a tunnel	40	46
Stationary buddles	43	102
Station in inclined shaft timbered with stulls	41	119
" Shaft timbering for	41	117
Stations and ladders in shafts	40	20
" for inclines, Location of	40	62
" Location of, at inclines	40	62
" Timbering pockets at shaft	41	120
Stationary screen jigs	43	88
Stay box	43	100
Steam shovel, Back-acting	41	8
" " mines, Advantages of	41	7
" " mines, Disadvantages of	41	8
" stamp, Tremain	43	36
" stamps	43	33
Steel beams or rails to support linings	41	127
" head frames	42	6
Stemming or tamping shot holes	41	75
Stephenson amalgamating pan	43	162
Step plates	43	193
Stock pile, Loading ore into cars from	42	18
" " Special trestle for building	42	17
Stock piles	42	15
Stope, Overhead, carried as a breast	41	20
" Taking up timbering of	41	122
Stopes, Size of timbers for	41	115
Stoping, Longitudinal back, with filling	41	33
Stoping, Overhead	41	19
" " from bottom of winze	41	21
" " without a winze	41	22
" Transverse, with filling	41	29
" Underhand (Cornish)	41	18
" " (Regular)	41	16
Storing powder	41	96
Strength of walls	41	15
Stripping mines	41	2
Stull rooms or saddleback rooms	41	54
Stulls	41	101
" Use of, in shafts	40	20
Sturtevant mill	43	55
" roll jaw crusher	43	6
Sulphur, Leaching of	41	65
Sump	40	17
Supplies, Transportation of	42	22
Support of masonry shaft linings	40	37
" " timber	40	18
Surface arrangements at metal mines	42	1
" Effect of, on mining methods	41	56
" Tunnel as artificial	40	11
Sutro tunnel	40	43
Sway braces	42	39
Sweating amalgamating plates	43	190
Swelling ground, Definition of	40	54
" " shaft, Timbering in	40	35
" " Special form of timbering for, in tunnels	40	58
" " Special tunnel sets for	40	50
" " Timbering of, in tunnels	40	54
Swinging plates	43	196
Switches for turning cars from inclines	40	63
System of mining, Deciding upon	41	14

	Sec.	Page.
System of sampling and assaying	40	13

T.

	Sec.	Page.
Table, Wilfley	43	120
Tables, Bumping	43	116
" Vanning	43	120
Taking up the timbering of an upper stope	41	122
Tail strip for square sets	40	32
Tailings discharge for jig	43	99
" Discharge of, without water	43	216
Tamping or stemming shot holes	41	75
" for high explosives.	41	76
Tanks at mill, Placing of water	43	207
Tappets for stamps	43	20
Temperature of tubes in ground in freezing process	40	82
" Underground..	41	133
Templet for shaft	40	15
Temporary floor, Protection by, while sinking	40	18
Test openings, Location of	40	2
" " Necessity of	40	1
Thawing of powder	41	97
Ties for tracks in tunnels	40	54
Tilly Foster iron mine	41	4
Timber, Advantages of sawed, in tunnels	40	51
" " of using machine-framed.	41	113
" Available, Influence of, on mining method	41	15
" Character of	40	18
" Effect of, on methods of mining	41	57
" Factors which determine the size of, for tunnels	40	51
" framing machine	41	113
" General arrangement for handling	42	31
" Influence of manner of bringing, to mine	42	27
" Keeping of sawed	42	28
" Keeping, in water	42	27
" Machine-framing	42	29
" pillars or cogs	41	115
" Placing, for framing..	42	29
Timber, Precautions to be taken in placing mine	41	114
" Removing of bark from	42	27
" Seasoning of	42	27
" " and treating of	41	124
" Sizes of, in common use for tunnels	40	52
" Size of, for shafts	40	30
" skip, Balanced	42	31
" Special, for Ontario mine tunnel	40	55
" Stability rather than strength required in shaft	40	18
" structures, Framing of	42	39
" Support of	40	18
" Transporting, down vertical shafts	42	30
" Transporting, down inclined shafts	42	29
" yard and means for handling timber	42	27
Timbers, Decay of	41	132
" Size of, for stopes	41	115
Timbering for a shaft station..	41	117
" " inclines	40	65
" " loose, watery ground	40	19
" " narrow deposits	41	101
" " tunnels	40	44
" Mine	41	101
" of drifts	41	115
" " swelling ground in tunnels	40	54
" Origin of square-set	41	104
" pockets at shaft stations	41	120
" Shaft	40	18
" " in swelling ground	40	35
" Special forms of shaft	40	34
" " form of, for swelling ground in tunnels	40	58
" Square-set, for a raise	41	117
" Taking up that of an upper stope	41	122
Tin ores, Concentration of	43	223
Tina for amalgamating	43	156
Torta	43	153
Tossing tubs	43	112
Tracks for tunnels	40	53
" Roadbed for	42	24

	Sec.	Page.
Tracks, Gauge of	42	23
" Grade of	42	24
Traction engines	42	27
Trains, Wagon	42	25
Tramway, Aerial	42	25
Transmission of power	42	32
Transportation of ore and supplies	42	22
" Relation between character of ore and	42	24
Transverse rooming with filling	41	38
" stoping with filling	41	29
Trap-doors, Angle of	40	41
" or drawbridges for turning cars from inclines	40	63
" or hood	40	17
Trapiche for amalgamating	43	151
Traps, Mercury	43	195
Treadwell gold-quartz mine, Open-cut	41	4
Treatment of jig products at mills	43	213
Tremain steam stamp	43	36
Trepan, Large, for Kind-Chaudron system	40	88
" Small, for Kind-Chaudron system	40	86
Trestle, Special, for building stock pile	42	17
Trestles, Bents framed for	42	42
" Foundations for	42	42
" Framing of	42	39
Triumph concentrator	43	133
Trommels	43	63
Trompe	41	142
Trough classifier	43	75
Tub, Dolly	43	115
Tubes for freezing process, Connections of	40	79
" " freezing process, Methods of placing	40	79
Tubbing or lining shafts in Kind-Chaudron system	40	89
Tubs, Tossing	43	112
Tulloch feeder	43	58
Tunnel and shaft, Comparison of	40	10
" as artificial surface	40	11
" connected with the shaft, Ventilation of	41	135
Tunnel, Cross-cut through country rock, Advantages and disadvantages of	40	9
" Cross-cut through country rock, Advantages and disadvantages of	40	10
" Driving a, by wedging	40	49
" in vein, or adit, Advantages and disadvantages of	40	9
" linings	40	44
" or adit, Definition of	40	59
" Ontario Mine, No. 2, Description of	40	55
" Posts in center of	40	58
" Points to be observed in determining cross-section of	41	117
" sets, Collar braces for	40	51
" " Diagonal braces for	40	51
" " Heel or foot braces for	40	51
" " Special, for swelling ground	40	50
" Starting a	40	46
Tunneling, Pneumatic process for	40	75
Tunnels, Advantage of draining the ground in	40	59
" Advance holes from	40	59
" and tunnel linings	40	42
" connected with interior shafts	40	44
" Divisions of	40	42
" Drainage of	40	52
" Drilling in	40	44
" Form of	40	43
" Frogs for turning cars from	40	54
" Grade of	40	42
" Metallic shield for driving	40	59
" Pneumatic, for driving	40	59
" Posts and breast caps for	40	44
" Precautions to be taken in driving through wet formations	40	59
" Safety of workmen in	40	42
" Size of	40	42
" Special form of timbering for, in swelling ground	40	58

	Sec.	Page.
Tunnels, Special methods of driving	40	59
" Square sets for	40	45
" Some examples of mining	40	43
" Timbering for	40	44
Turn-outs or passing points for tunnels	40	54

U.	Sec.	Page.
Unconnected workings, Effect of, on ventilation	41	135
Undercutters, Salt mining by	41	68
Underground development, General principles of	41	12
Underground temperature	41	133
Underhand stoping (Cornish)	41	18
" " (Regular)	41	16
Uniform deposits, Exploration of	40	3
Upcast, Cases when men should pass through	41	137
Useful work performed by explosives	41	69

V.	Sec.	Page.
Values of explosives	41	69
Vanner, Frue	43	122
" Lührig	43	130
Vanners, Belt	43	122
Vanning machines	43	119
" tables	43	120
Variable-mesh screens	43	64
Varney amalgamating pan	43	161
Vein, Exploration of	40	11
" Influence of width of	41	14
Veins more than 8 feet thick, Methods of mining	41	26
" or beds cropping to the surface, Methods of opening	40	5
Ventilating fans, Classes of	41	145
" furnace	41	143
Ventilation, Artificial means of	41	142
" Effects of water upon	41	140
" General principles of	41	134
" of metal mines	41	129
" Natural	41	133
" Natural, Advantages and disadvantages of	41	141
" Simple tests of	41	135
Ventilator, Waterfall	41	143
Ventilators, Blowers as	41	143
" Compressors as	41	143
" Fans as	41	145
Vertical posts in drift sets	41	116
Volley-firer	41	89

W.	Sec.	Page.
Wagon-trains	42	25
Walling braces	42	39
Wall-plate for square sets	40	26
Walls, Character of	41	56
" False, or horses	40	4
" Strength of	41	15
Washer, Log	43	142
Water-blast	40	39
Water-blowers, Hartz and Cornish	41	143
Water, Effects of, upon ventilation	41	140
Waterfall ventilator or trompe	41	142
Water, Influence of, on mining method	41	15
" in tunnels	40	52
" Keeping timber in	42	27
" power	42	32
" tanks, Placing of, at mill	43	207
Water-tight joint for caisson	40	73
Wedging, Driving a tunnel by	40	49
Wells, Mercury	43	195
Wet crushing	43	2
" formations, Precautions to be taken in driving tunnels through	40	59
Wheeler amalgamating pan	43	159
Wide veins, large masses, or regular deposits more than 8 feet thick	41	26
Width of deposit or vein, Influence of	41	14
Wilfley table	43	120
Wind-sails	41	140
Winze, Overhead stoping from bottom of	41	21
" " stoping without a	41	22
Winzes	41	13
Woodbury concentrator	43	134
Wooden air-boxes	41	139
" track for tunnels	40	53
Wood's dry placer miner	43	135
Workings of neighbors, Influence of	40	12
Work, Useful, performed by explosives	41	69

Z.	Sec.	Page.
Zinc ores, Concentration of	43	222

PRELIMINARY OPERATIONS AT METAL MINES.

EXPLORATION AND DEVELOPMENT WORK.

INTRODUCTORY REMARKS.

1. After the prospector has discovered indications of the existence of a deposit of valuable mineral, the question is: How shall the deposit be recovered? The mining engineer is called upon to answer this question. A certain amount of exploration work is necessary before the best method of working can be decided upon.

2. Even after a mine is partially opened, a system of exploration or searching for ore should be continually carried on in virgin (undeveloped) ground while the ore already found is being extracted. Otherwise the superintendent may find himself without ore to work upon, and the owners are then liable to become discouraged and cease operations.

3. It is apparent, therefore, that not only when commencing development work, but at all times subsequently, the mining engineer must carefully observe and familiarize himself with every geological and physical feature of his property which may be disclosed from time to time, in order to act intelligently regarding the system of working underground and to decide upon the dimensions and character of any surface improvements which may be required.

4. Necessity of Test Openings.—If no previous work has been done beyond the location of the vein, and

For notice of the copyright, see page immediately following the title page.

the positive or probable position and value of ore-bodies are not known, test openings should be made before deciding upon permanent improvements. Many costly errors have been experienced in erecting large hoisting works and mills or in making other extensive improvements without sufficient knowledge of what the vein contained.

5. Location of Test Openings.—It is usually well to carry on the exploration with an idea of determining the character of the vein below the most promising outcroppings, if any exist. At times the entire surface of the vein is so weathered and low grade that the best point can not be determined. In such a case, the openings will be made near the center of the claim, or where they are accessible to wagon roads and have a good dumping-ground.

METHODS OF EXPLORATION.

6. General Classes.—There are two general methods of carrying on exploration work:

1. By drilling, which is usually done with a diamond drill.

2. By means of ordinary mine openings, such as shafts, tunnels, inclines, etc.

CLASSES OF DEPOSITS.

GENERAL DIVISIONS.

7. For convenience of treatment, ore-bodies can be divided into two general classes:

(*a*) Those of a comparatively uniform nature, such as iron ore, salt, gypsum, etc., the profitable mining of which depends upon the ability to produce large amounts of a uniform product at a small cost per ton. With this class of formations the size and character of the deposit is of great importance.

(*b*) Formations in which ore occurs in pockets, either scattered through the country rock, as some of the deposits

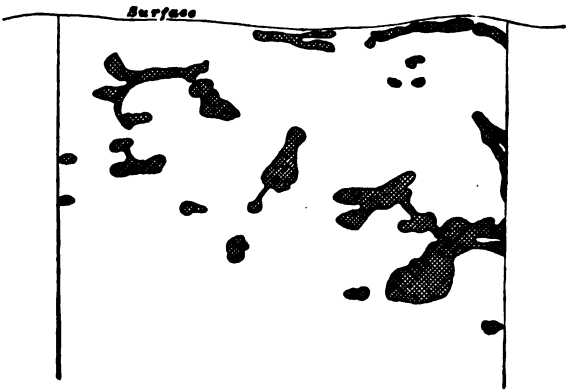

FIG. 1.

of lead, zinc, etc., or in broken vein material, as illustrated by the Eureka Consolidated Mine, near Eureka, Nevada. (See Fig. 1.)

EXPLORATION OF UNIFORM DEPOSITS.

8. When bodies of ore of a uniform nature are being explored, there are two methods which may be followed: either small drifts may be driven through the ore, without being timbered, and subsequently either enlarged to the size of the ordinary working drifts and timbered or abandoned altogether and allowed to cave; or the regular working drifts may be driven at once and timbered. In either case the exploration drifts should be so driven as to divide the ground into approximate rectangles and so to determine the form and value of the ore deposits. This method has been followed in the exploration of many iron deposits, and if the mine is to be worked by the caving process, the exploration drifts are abandoned and allowed to fill up. The advantages of having them driven are:

(*a*) The character of the ore has been determined at each point.

(*b*) By continuing the drifts into the walls of the deposit, any parallel ore-bodies or portions of the deposit hidden behind horses of rock have been discovered. These deposits might have been lost in subsequent working had this precaution not been taken.

(*c*) The extent and form of the deposit has been determined, which enables the engineer to select the most efficient method of mining.

9. In cases where the general form of a deposit has been determined by means of the diamond drill, it may be best to lay down a regular system of mining, and to carry the main drifts of this system well ahead of the stoping, timbering as the work progresses; in this way the exploration work and the advance portions of the regular mining are carried on simultaneously, avoiding the expense of enlarging the exploration drifts before timbering them.

10. False Walls or Horses.—It is always best to continue some of the exploration drifts into the walls of the deposit, for it frequently happens that a deposit has false walls, or is divided by horses of rock; then again, ore-bodies frequently occur as parallel shoots or chimneys of ore. In cases where the ore deposit is of considerable extent, it is frequently sufficient to simply run out the successive levels and carry cross-cuts through the ore deposits upon these levels; but if the deposit is a somewhat narrower vein, it may be necessary to drive raises or winzes connecting these levels at intervals, thus dividing the ore into rectangles in both the horizontal and vertical planes.

11. Flat Deposits.—In many of the Mesaba mines the ore deposit lies nearly parallel to the surface, being of great extent, but not very deep. In such cases the exploration work may be carried on by sinking test pits or small shafts through the overlying material and the ore deposit.

12. Soluble Material.—Owing to the fact that some minerals are soluble in water, the exploration work and

subsequent mining have to be carried on in a special manner. This will be treated under the subject of *Metal Mining.*

EXPLORATION OF "POCKETY" DEPOSITS.

13. In exploring deposits which occur as pockets, it is necessary to drive drifts through the material, following any indications which may be discovered and which would lead one to believe that the ore might lie in a certain direction. In such cases, the exploration drifts are frequently very crooked, and are usually accompanied by a great many raises and winzes. It will be seen that no regular rule can be laid down for the examination of such formations; but the engineer must use his judgment, guided by the general practice of underground prospecting, as treated in *Prospecting.* Even when prospecting irregular deposits, it is best to lay out the work according to certain principles, and to divide the ground as nearly as possible into rectangular blocks. This is to facilitate drainage and to furnish a means for the handling of material to or from the stopes.

METHODS OF OPENING UP MINERAL DEPOSITS.

VEINS OR BEDS CROPPING TO THE SURFACE.

14. Veins of this character may be worked:

By sinking a shaft or slope on the vein and following its dip.

By shaft in foot or hanging wall and cross-cuts driven to the vein. (See Figs. 2 and 3.)

By adit or tunnel from the lowest point at which the vein crops.

By tunnel through the country rock from the lowest point available in an adjacent valley.

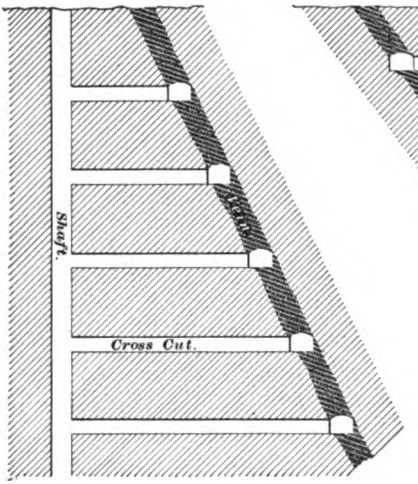

FIG. 2.

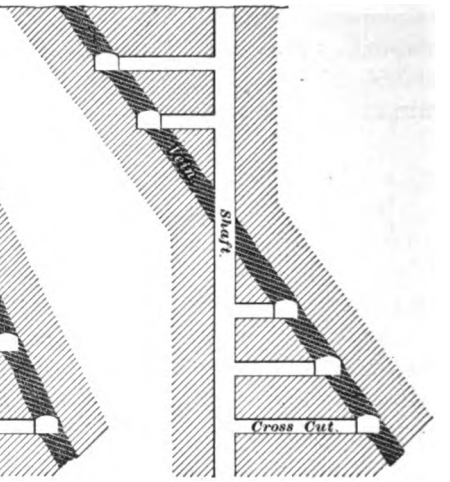

FIG. 3.

DEPOSITS NOT CROPPING TO THE SURFACE.

15. Among this class of deposits may be mentioned most of the beds in the limestone at Leadville, Colorado, and in many other sections of the West; the lead and zinc ores

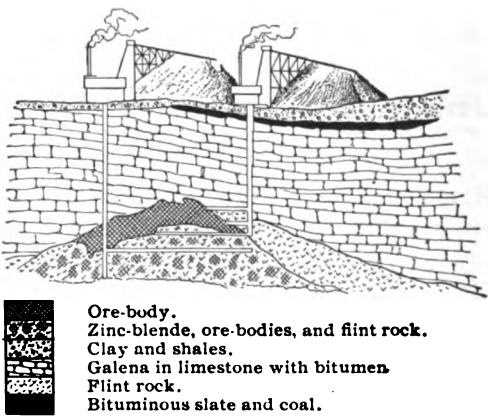

FIG. 4.

of the Mississippi Valley; also the blanket and saddle reefs, together with most deposits of iron, salt, gypsum, etc.

These deposits are usually prospected for by drilling or sinking shafts, and at times sufficient information is obtained by the drill to lay down the permanent system of mining.

(Deposits not cropping to the surface usually have to be worked by means of shafts or inclines. Of course there are rare instances in which a tunnel or adit may be driven from some adjacent valley.)

Fig. 4 is a vertical geological section representing one of the many forms in which zinc (or zinc and lead) ores are deposited. The surface being comparatively level, openings must necessarily be made through vertical shafts.

RELATIVE ADVANTAGES OF THE DIFFERENT FORMS OF OPENING.

INCLINES.

16. Advantages.—Some of the advantages of sinking on the vein are:

That the value of the deposit is determined as the work progresses.

The course of the vein is known at each point.

The ore-body may be explored by drifts in both directions from the incline.

It is frequently the case that the ore taken out in this development work pays all or part of the expenses.

17. Disadvantages.—Some of the disadvantages of sinking on the vein are:

The water has to be removed by mechanical means (as with a shaft).

The opening is usually at such an angle that a skip has to be employed.

SHAFT.

18. Advantages.—Some advantages of developing by shaft are:

Timbering in a shaft is easier to place and keep in repair than in an incline.

The shaft may be considered a permanent opening and treated accordingly.

An incline in the vein requires pillars of ore its entire length to support the roof, while a vertical shaft in the foot-wall requires no pillars, and a vertical shaft in the hanging wall requires only small pillars where it passes through the vein, hence a greater proportion of the deposit can be removed with a vertical shaft than with an incline in a vein.

A cage can be used and the cars brought to the surface.

Shafts can be carried to great depths (some of the Michigan copper mines are now operating to 5,000 feet and are proposing to sink to 6,000 feet or over).

Examples occur where, owing to irregular or "pockety" deposition of ore within a vein, vertical shafts are desirable, since levels may be driven from them at any point where necessary for convenient and economical working.

An example of the above irregularity is shown in Fig. 1, which is a vertical longitudinal section of a portion of the Eureka Consolidated Mine near Eureka, Nevada. The ore in this mine is not deposited between two well-defined walls of a vein, but is found in a zone of crushed and shattered limestone along a great fault. The phenomena of "pockets," of greater or less magnitude, are quite common among mines, especially when the ore is in limestone.

19. Disadvantages.—Some of the disadvantages are:

The shaft and cross-cuts are all dead work.

The value of the vein is determined only at points where it is cut by cross-cuts, and has to be exposed afterwards by drifting and by winzes or raises.

The vein may change its dip and leave the shaft so fast that the length of the cross-cuts would render them more

expensive than sinking a new shaft. At the same time, driving can be done so quickly and cheaply now that this does not carry the weight it once did.

When the shaft is situated in the hanging wall, it is necessary to leave pillars of ore surrounding it at the point at which it intersects the vein.

The water has to be removed by mechanical means (as in the case of inclines).

By locating the shaft as in Fig. 2, the length of the cross-cuts may be reduced. Such a shaft should cut the vein at one-half of its ultimate depth, so as to average the lengths of the cross-cuts. But at times the nature of the hanging wall is such that it can not safely carry the shaft.

ADIT OR TUNNEL IN THE VEIN.

20. Advantages.—Some of the advantages of an "adit" in the vein are:

The vein is prospected as the work progresses.

Being in the deposit, it often pays its own way.

It unwaters the mine.

No machinery is required to hoist the ore, as the cars can be trammed out through the "adit."

All the ore above can be stoped out and run down into the cars by gravity.

21. Disadvantages.—Some of the disadvantages are:

The adit will only serve to remove the ore above its own level.

The adit does not explore the ground at either side of the vein.

CROSS-CUT TUNNEL THROUGH THE COUNTRY ROCK.

22. Advantages.—Some of the advantages of a tunnel are:

No machinery is required to hoist the ore.

All the ore above the tunnel can be stoped out and run down to the cars by gravity.

It unwaters the mine.

It explores the ground to one side of the deposit, and if other veins or deposits exist, will pass through them.

23. Disadvantages.—Some of the disadvantages of a tunnel are:

It may pierce the vein in a worthless portion, or miss it entirely, on account of a fault or change in the pitch of the vein.

A tunnel is all dead work.

It will only serve to remove the ore above its own level.

GENERAL REMARKS.

24. Comparison of Shaft and Tunnel.—In the case of a tunnel, power haulage is used only when very heavy tonnages have to be handled, and it is much cheaper than hoisting (about one-third). If the region is remote and the freight rates very high or fuel expensive, it may be better to drive a very long tunnel than to try to get machinery for a shaft. When capital is scarce, a tunnel has the advantage that there are no pumping expenses. The transporting capacity of a tunnel is very much above that of a shaft or incline of the same size.

25. The cost of driving a tunnel is usually about one-third that of a shaft of the same dimensions. That is, a tunnel can be driven 3 feet for the money it would cost to sink a shaft of the same size 1 foot, and if the formation is very wet, more than 3 feet of tunnel can be driven in the same time and for the same money required to complete 1 foot of shaft.

26. In very bad ground a shaft may be easier to keep in line, and will not require retimbering as often as a tunnel.

27. Exploration of Vein.—Sinking in the vein and an adit in the ore both explore the vein as the work progresses.

If an adit on the vein is not possible, and the value of the vein has been determined, by sinking along it, a shaft or tunnel through the country rock may be used to operate the mine. The information gained from the preliminary work will enable the engineer to select the best location for the new opening.

28. Two Openings.—The first or exploration opening in the ore may be used as a means of ventilation or escape, in case of an accident to the shaft or tunnel. In some localities the law requires two openings.

29. Tunnel as Artificial Surface.—Since a tunnel will only serve to remove the material above its own level, and as a shaft can be continued down to a great depth, if the mine is likely to be deep, it may be best to sink a shaft at once, though the tunnel can be used as an artificial surface to which the water may be pumped from below; cars may also be hoisted to its level and then run out.

30. Location of Opening.—The shaft should be so located as to give ample room for dumping and for the handling of timber and supplies.

The entrance of a mine (tunnel, shaft, or incline) must be placed so as to be above all freshets, have ample dump room for waste material, and be able to deliver the ore so as to dump it into cars, wagons, bins, or upon the upper floor of the mill.

31. Use of Skips.—If skips are used to hoist the ore, the shaft can follow the vein anywhere from vertical to as flat as the skip will draw the rope after it, sheaves or guide-wheels being placed in the top or bottom of the shaft to guide the rope at points where the skip-road changes its angle.

32. When skips are employed for hoisting ore in shallow mines, the men have to travel in and out on man engines

or by means of ladders or stairs. In deep mines, special slope carriages are sometimes provided, which run on the skip-roads, and in which the men are hoisted.

33. If an incline is used, it is best to place it in the foot-wall, so that the ore can always be handled down to the skip or carriage.

34. Size of Opening.—Before sinking a shaft, some estimate should be made as to the size required, for the expense of enlarging a single-compartment shaft and making a two-compartment shaft of it (including the timbering) is more than one-half of the cost of a new shaft of the required dimensions.

35. Influence of Character of Ore on Mine Opening.—The character of the ore to some extent determines the manner in which it must be brought to the surface and handled. Thus, most iron and copper ores can be brought out in skips as well as in cars, for the extra dumping will not injure the ore. On the other hand, if the ore contains valuable and brittle minerals, as silver sulphides, etc., the extra handling would result in the loss of much fine and very valuable material. In such a case the ore must come from the stope to the mill or smelter with as little handling as possible.

This may rule out an incline between 35 degrees and 90 degrees from the horizontal, as being too steep for cars and too flat for cages. Slope carriages may be used to bring cars out of inclines, but they require a large amount of head room, which means the driving of a very high incline.

36. Workings of Neighbors.—At times a deposit is exposed by the workings of neighbors, and such information will have an influence on the best method of opening up a mine.

The matter of drainage; of pumping or hoisting through openings, if any, existing in an adjoining property; of joint operation through a common opening by two or more companies, are questions which may arise, and can be equitably

adjusted upon the basis of benefit accruing to each party interested.

37. Financial Resources.—Another important factor, financial resources, is ever present, and enters into all calculations. A meager treasury may influence the adoption of plans not otherwise satisfactory.

In this connection, let it be remembered that mining should be treated as a commercial enterprise, and not altogether as an opportunity for indulging some pet theory of engineering. Superintendents have been known who have insisted upon a certain scale of operations regardless of profit.

38. Prejudices or Hobbies.—Foremen employed for a time in some very large or prominent mine occasionally form an idea that the methods of working followed there are "the only infallible ways," and perhaps may be disposed to cater to their prejudices forever after, without due consideration of the real requirements.

39. System of Sampling and Assaying.—Development work should be accompanied by a careful system of sampling and assaying, in order that the engineer may know the character and value of his reserves.

In any case, the prudent engineer will keep his preliminary openings well ahead of his work, so as to always have a reserve of ore in sight.

SHAFTS AND SHAFT LININGS.

GENERAL ARRANGEMENT.

40. Classes.—Shafts may be divided into permanent and temporary, or shafts of a definite predetermined capacity and those sunk for exploration purposes.

41. Number and Size of Compartments.—When practicable, all shafts should have two compartments, one for hoisting and one for ladderway and pumpway. Some small prospecting shafts, sunk to prove the existence of a

body of ore, have but a single compartment, and if a large body of ore is discovered, the prospect shaft will probably be given a secondary place, the ore being removed through a larger and better located opening, either a shaft or a tunnel.

42. It is always cheaper to hoist in balance, that is, with two cages, one of which is ascending while the other descends, and so lessening the work of raising the loaded cage. With a single shaft, this requires three compartments, one for pumpway and ladderway and two for hoisting. If there is a reasonable probability of a large output, it is best to sink the three-compartment shaft at once. The size of the hoisting compartment is determined by the size of the cage or skip to be used.

43. Number of Shafts.—If it is desired to remove the deposit quickly, several shafts will be required, each shaft having its own hoisting equipment.

44. It is common practice, where several shafts are sunk, to remove the ore quickly, to have no ladderway in the hoisting shafts, thus reducing the danger of fire (the ladder compartments always being the hardest in which to fight fire), special ladderway and pumpway shafts being provided for the mine.

45. Arrangement of Compartments.—If several rectangular compartments are used, it is best to place them

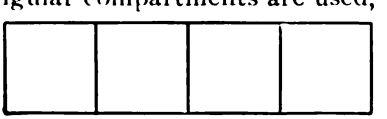

FIG. 5.

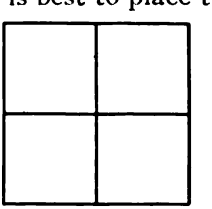

FIG. 6.

side by side rather than in a compact block, as the former arrangement gives the greatest resistance to crushing. (See Figs. 5 and 6.)

46. Form of Shaft.—When shafts are to be timbered, they are usually rectangular.

When the lining is composed of brick, stone, or iron, the form is usually round or elliptical, as this gives greater strength with these materials than would be afforded by the square or rectangular form.

The objection to the curved outline is that all the area is not available for hoisting.

47. Shaft Templet.—Before commencing to sink, the shaft site should be graded off level by cutting away all

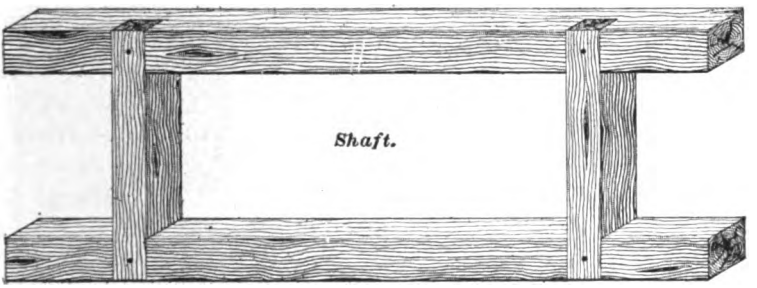

FIG. 7.

inequalities of surface, and long sills should be laid on each side of the proposed opening. Cross-pieces are framed into these sills, making a rectangular frame (Fig. 7), which constitutes a templet of the shaft, and serves as a foundation for whatever timbering is required at the collar. Its inner surface is flush with the inner face of the shaft curbing. If square sets are to be used, a very substantial support for commencing may be obtained by laying the first wall and end plates on top of the templet and allowing the hanger bolts to go through. This should be attended to as early as convenience will permit, so that further details of the work can be arranged at the collar of the shaft.

48. Foundation for Head-Frame (Gallows-Frame).—A very common custom in starting a shaft is to grade around the mouth (collar) with excavated rock, and when a head-frame (gallows-frame) is needed, to lay the sills on "made" ground. Especially is this the case when the collar of the shaft must be raised to provide dumping facilities.

This plan works fairly well, when only light hoisting machinery is used, until the dirt has had time to settle and become firm. But if there is immediate need of a permanent, substantial head-frame, the sills should have a solid foundation prepared for them. This can be accomplished without serious expense by commencing ordinary stone walls, with wide bases in firm ground, and carrying them up as the grading (filling) progresses, being careful to fill in around the walls with fine dirt and to throw the coarse rock somewhere else.

The head-frame should always have a foundation independent of that carrying the shaft timbers.

49. Removal of Material During Sinking.—Whatever the size of the shaft, the first few feet are excavated in the same manner; that is, the earth or other material is thrown out by hand.

If the shaft is small, it may be carried down 90 to 100 feet with a windlass, and then, if it is a small prospecting shaft, a horse-whim may be used for the next 100 or 200 feet.

But if it is intended to use an engine, the sooner it is in place and ready to assist in the work the better.

50. Sinking by Hand.—Small one or two compartment shafts can be sunk by hand cheaper and almost as expeditiously as by the use of power drills, there not being room to properly operate the power drills. Only two miners can drill to advantage on an area of 20 square feet. A larger area gives each man more room, and in an ordinary two-compartment shaft a machine can be used to advantage, or two gangs of men can work at the same time.

51. Disadvantage of Having to Hoist Material.—One reason that shaft sinking is so much slower than drifting is that the material blasted has to be cleared away after each shot before drilling can be resumed. Then all the tools and men have to be hoisted out before each shot, while in the drift the tools are simply taken back a safe distance and covered with something to protect them.

52. Sump.—In sinking, a sump should be carried in advance, so as to have some place in which the water can collect and from which it can be pumped.

53. Hood or Trap-Doors.—A hood is often provided over the miners' heads to protect them from falling stones. For the same reason, and to keep out rain or snow, shafts are often provided with trap-doors at the surface.

54. Pentice.—If a shaft is to be prolonged while the upper part is still in use, protection for the miners may be

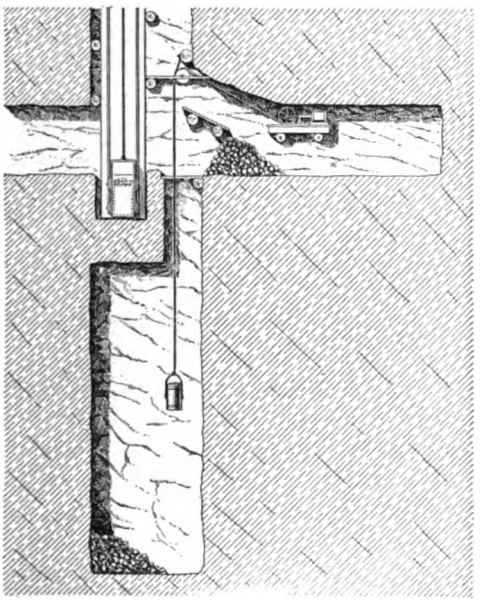

FIG. 8.

obtained by opening only that portion of the shaft area not under the hoistway for a distance of 12 to 15 feet, and then widening it out the entire size of the main shaft. This leaves a roof of rock ("pentice"), Fig. 8, that shields the men. When another lift has been sunk, the pentice is cut away, and another started for the next drop. The hoisting is by underground engine or by bucket and windlass. This

method may be employed in cases where the entire lift can be left untimbered during sinking.

55. Protection by Temporary Floor.—Where the nature of the ground requires timbering, either immediately or very soon after the opening is made, the shaft is continued its full size and timbered, the miners being protected by a temporary floor placed below the cage or skip landing. When this method is followed, the water coming down the shaft must be trapped and carried to the sump, either at one side of the shaft or at some point on the working level. One advantage of this method is that in case it is desired to use the shaft immediately after its completion, the timbering will be ready to receive the cage-guides and everything in shape for immediate use.

SHAFT TIMBERING.

REMARKS.

56. Time for Lining and Support of Timber.—All shafts should be lined during sinking, or as soon thereafter as possible. In case timbering is used, each set may be supported in hitches cut in the walls; several sets or a section of the timbering may be supported on reachers placed across the shaft every 25 to 30 feet, or the sets may be hung from above by means of bolts or pieces spiked to the inside of the shaft timbers.

57. Character of Timber.—Dressed timber is always best for underground work, but in the case of small prospecting shafts, hewed or even rough logs may be used.

58. Stability Rather Than Strength —Ordinarily, shaft timbers are not expected to bear any great strain from the pressure of the ground, this weight being carried by the shaft pillars when the shaft penetrates the deposit, the timbers only being called upon to keep the ground in place; hence, stability rather than strength is what is demanded.

59. Hoisting Speed.—Shafts for skips or cages require heavier timbering than those for buckets, and the greater the hoisting speed the heavier must be the timbering.

60. Loose, Watery Ground.—When a shaft passes through loose, watery, or shifting ground the lining is sometimes subjected to a great crushing strain, especially when an attempt is made to dam back the water and confine it to the strata passed through. In such cases very heavy timbering will be required, 24″ × 24″ or even 24″ × 30″ timbers being sometimes employed.

CRIBBING.

61. Cribbing of Round Logs.—In the case of cribbing, the lining is built up of logs or pieces of timber laid

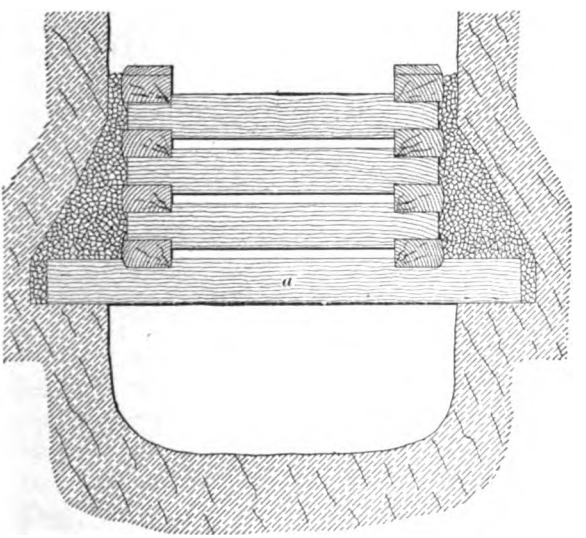

FIG. 9.

one upon another, log-cabin style. The cribbing may be made from round timber 5 or 6 inches in diameter, framed by cutting shoulders on each stick, as indicated in Fig. 9. The depths of these shoulders vary according to the size

of the timber, but should not be less than 1 inch. Timbers from 6 to 8 inches in diameter, split once, will answer, if they are more easily procured than the smaller round sticks. In using the split timber, the round face is usually placed next to the ground. All splinters must be carefully trimmed from the inside (next the shaft) to prevent catching on the clothing as the men are passing up and down.

62. Use of Stulls.—When the sinking has advanced as far as safety will permit, a stout stull *a*, Fig. 9, is placed across each end of the shaft. These stulls are level with each other. Their ends rest in hitches cut in the sides of the shaft, and they are adjusted by plumb-lines coming from the surface. When in line with the upper timbering or the collar of the shaft, the stulls are blocked or wedged firmly into place. Cribbing is then built upon them, log-cabin style, up to the stulls supporting the next upper section of cribbing or to the collar of the shaft. Any vacant space behind the cribbing is filled with excavated material or blocks of timber as the work progresses. Wedging or blocking is sometimes necessary behind the cribbing at the corners of the shaft, to adjust them to plumb-lines hung from the surface and to retain them firmly in position. After the section of cribbing is complete, sinking is resumed, and when ready to timber again other stulls are set as before and another section of cribbing built up.

63. Stations and Ladders.—Upon reaching a point from which it is intended to drift, the last stulls should be put in just above the station or drift entrance; possibly no timbers will be needed in the short distance from there to the bottom of the station, but if necessary it is best to place other stulls just below the station and set posts in each corner reaching from the lower to the upper stulls. Lagging is placed behind these posts on all sides, except the one open towards the drift. If water is present or expected, the shaft must be continued deep enough to afford a suitable sump. A landing station for the drift is then obtained by means of a trap-door or platform level with the floor. Every

shaft should have ladders, firmly spiked to the timbers, as a means of exit in case of accident to the hoisting apparatus. During sinking, chain ladders, about 15 feet long, should always be used to hang from the last rungs of the stationary ladder to the bottom of the shaft. They are not injured by blasting.

64. Light Cribbing of Sawed Material.—In certain districts (especially in lead and zinc mining), owing to scarcity of round timbering suitable for cribbing, miners find it cheaper to use sawed material, 2″ × 4″, 4″ × 4″, or 4″ × 6″, depending upon the nature of the ground and the depth of the shaft. Framing is not necessary for the 2″ × 4″. Their ends can be lapped and spiked together as illustrated in Fig. 10. Cribbing of this character will be materially strengthened by nailing a 1″ × 4″ strip *A* down each corner of the shaft. The larger sawed timbers require framing similar to the round ones.

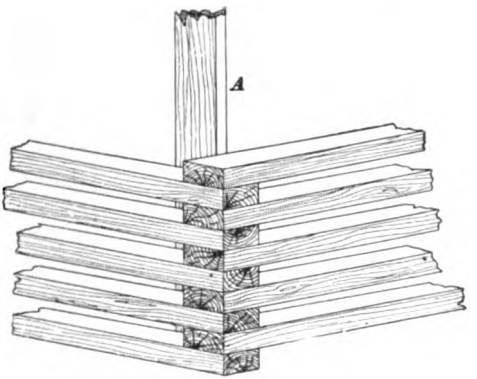

FIG. 10.

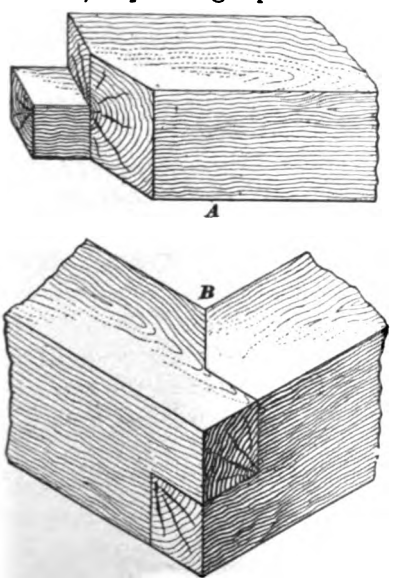

FIG. 11.

65. Joint to Resist Heavy Pressure.—When cribbing is used in large shafts, or where very heavy pressure is expected upon

the timbers, the form of joint shown in Fig. 11 is used at the corners of the sets, *A* being one of the timbers and *B* the complete joint. The rows of cribbing may be laid one upon another, enclosing the shaft in a solid box of timber, or they may be so placed as to have a bearing upon each other at the ends, leaving a space of only 2 or 3 inches between the adjacent timbers. The thickness of the cribbing in large shafts usually varies from 10 inches to 14 inches.

66. Cribbing for Large Shafts.—A good form of cribbing for shafts that have to carry a great strain is shown

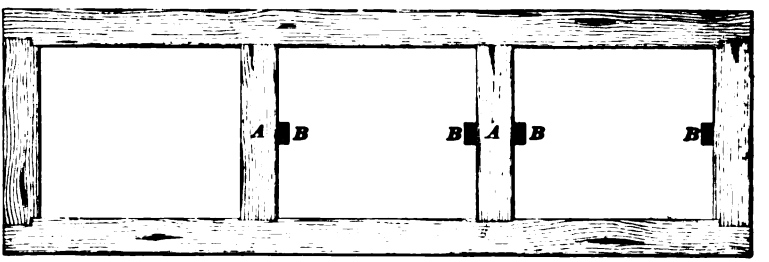

FIG. 12.

in Figs. 12 and 13. The partition pieces or buntons *A*, *A*, Fig. 12, should be 8 or 10 inches thick horizontally, and their vertical thickness the same as the cribbing. The ends of the buntons rest in gains cut ½ inch deep in the sides, as shown in Fig. 13. The buntons should break joints with the wall-plates; that is, the center of any bunton should be opposite the division between the two adjoining wall-plates. This prevents any single row of cribbing from bulging out. The special advantage of cribbing is its superior strength. It may be used in shafts of almost any size. If the side-pieces or wall-plates are so long and heavy as to be unwieldy in

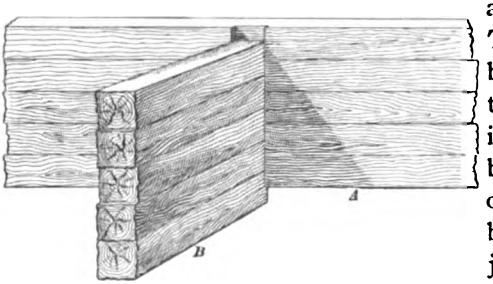

FIG. 13.

one length, they may be made in sections, the joint being behind one of the partitions or buntons and the location of the joint being altered between two different partitions with each row of cribbing.

67. Cribbing for Small Shafts in Good Ground.— When sinking comparatively small shafts through fairly good ground, cribbing framed as shown in Fig. 9 may be used. The depth of the shoulder on each stick may be so gauged as to leave a space of from 1 inch to 3 inches between the rows or cribbing. The framing is simple and the timbers are easily put in. This system is especially suited to shafts of two compartments, where hoisting is done with buckets. The partition is frequently made by spiking 2″ or 3″ planking to 2″ × 4″ vertical strips, which are carried down the inside of the shaft, as shown in Fig. 14, *A*, *A* being the 2″ × 4″ strips. Where a cage is to be used there may be trouble in lining up the successive rows of cribbing sufficiently true to allow the cage-guides to set evenly.

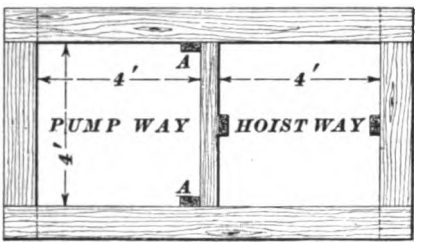

FIG. 14.

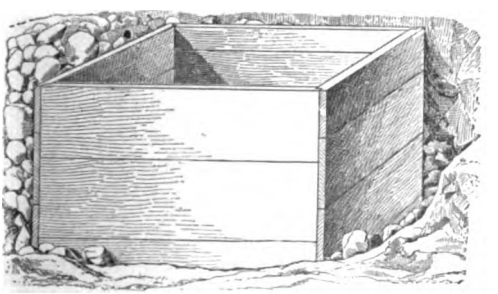

FIG. 15.

68. Three-Inch Plank Employed as Cribbing.— In small shafts using buckets, a lining of 3-inch plank, framed

as shown in Fig. 15, is sometimes employed; the planks are placed edge to edge and secured by blocking behind them with waste material, no spikes being necessary. This is really a form of cribbing and may be used in a three-compartment shaft in good ground, but it is not stable enough for use in a cage shaft. It is best, in placing plank, to arrange the pieces so that those on the ends break joints with those on the sides.

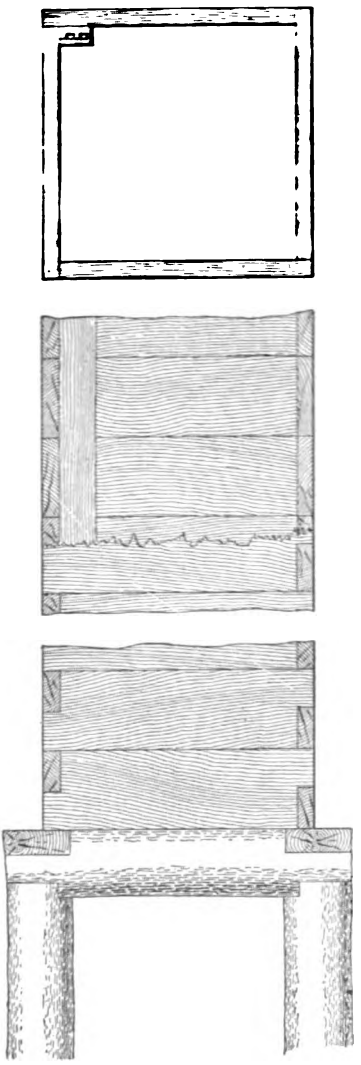

FIG. 16.

69. Plank Lining for Small Shaft.—Fig. 16 illustrates a lining for a small shaft through which ore is to be hoisted with a bucket, and which is intended only for prospecting or for temporary use. The lining is made of a 2-inch oak plank and is joined as shown in the illustration. In the plan of the shaft a box can be seen in one corner, which is intended for carrying the electric-light wires. The illustration shows the shaft partially in section and partially in elevation. If the ground has a slight tendency to displace the lining, it may be necessary to carry wooden strips down each corner of the shaft similar to those used for the electric-light wires. The shaft in the illustration is 3 feet 6 inches

outside of the timbers, and is used for mining zinc where the material passed through is clay. When the shafts are abandoned, most of the timbering is recovered, owing to the fact that the clay will stand without lining for a few days.

SQUARE SETS.

70. Advantages.—The method of timbering known as "square sets" has certain advantages, among which may be mentioned:

There is less difficulty in plumbing the shaft and in fitting the cage-guides.

The timbers are more readily repaired than when the shaft has been lined with cribbing.

If, during sinking, it becomes necessary to use forepoling, there is little trouble as compared with the sinking of a shaft by means of cribbing.

71. General Description.—Fig. 17 is a perspective view showing three sets and their posts. Some of the

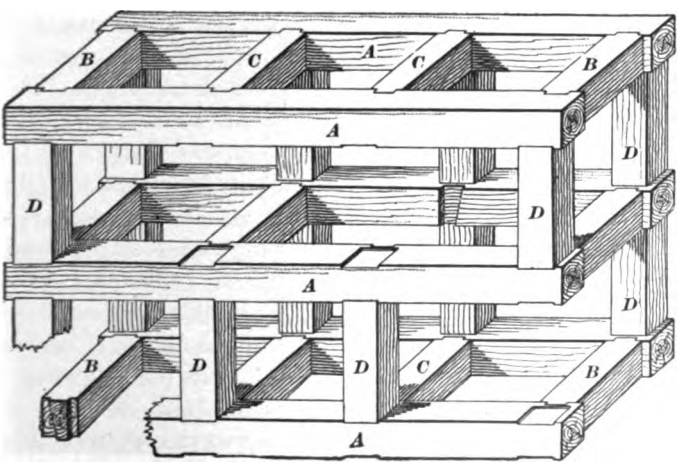

FIG. 17.

timbers have been removed to illustrate the styles of joints. A set proper for a 3-compartment shaft is composed of two

wall-plates *A*, *A*, two end-plates *B*, *B*, and two center girts or buntons *C*, *C*. Where the shaft is expected to have to resist considerable end pressure, the sets are sometimes framed as shown in Fig. 18, the end-plates being halved into

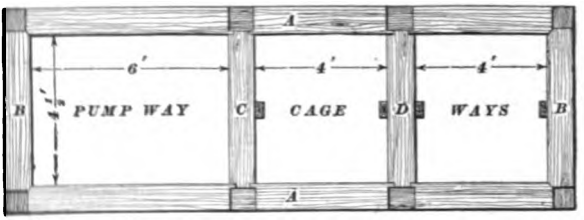

FIG. 18.

the wall-plates, and sometimes a small miter being employed at the corner. The sets are placed at suitable distances apart, usually about 5 feet, center to center. Vertical posts, reaching from one set to another, are placed in mortises at the corners of the frame and at the ends of each center girt, making 8 posts in all for a 3-compartment shaft. Where the pressure of the ground is not expected to be very heavy, 10″ × 10″ timbers may be used for the wall-plates *A* and the end-plates *B*, but in the case of heavy ground or great pressure, larger timbers will be required. The center girts *C* are usually of the same dimensions as the wall-plates, and the posts are a trifle smaller, being 8″ × 8″ or 8″ × 10″, where the other timbers are 10″ × 10″. Ordinarily, 2-inch plank, set vertically, answers for lagging, but in the case of heavy pressure it may be necessary to employ 3-inch plank. The sets are suspended by means of hanger bolts made of round iron rods, bent to a hook shape on one end and having a thread and nut on the other end, Fig. 19. There is one hanger for each compartment in the wall-plate, and in shafts of ordinary width (4½ feet in the clear) there may be two hangers to each end-plate, making 10 hangers in all for a 3-compartment shaft. For " work, the hangers may be made from ⅞-inch iron.

FIG. 19.

Square-set timbering is commenced by laying the first set on sills at the shaft mouth. Hanger bolts are inserted from below, with the thread end upwards, and on coming through are secured above by heavy cast-iron washers and nuts. The wall and end plates for the next set are then lowered, hangers being inserted through auger-holes, with the hook ends upwards and their lower ends being secured by nut and washer. The hangers on the second set can then be hooked on to those of the first set, the side and end plates brought into position and temporarily blocked, posts set up, and the hanger bolts tightened sufficiently to hold them. One or both of the center girts are laid in their places, and the set is finally lined in position by means of heavy plumb-bobs suspended in each corner. The hangers are screwed up tight and the whole frame securely blocked. Along the center line of the back of each wall and end plate 2″ × 2″ strips are nailed, and the lagging planks are allowed to stand upon these strips, being so prevented from dropping down behind the timbering. All vacant spaces back of the lagging should be filled in with excavated material or blocks of timber. The arrangement of hangers can be seen by referring to Fig. 20, which shows one side of a shaft with the timbers and hangers in place. Each set of timbers should be blocked firmly enough to hold afterwards without the aid of hangers, but as a matter of safety, they should be left in

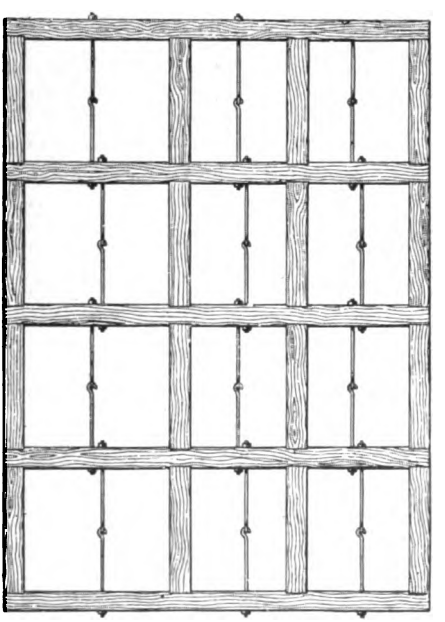

FIG. 20.

for from 75 to 100 feet from the bottom of the shaft while sinking. Upon reaching a point from which it is intended to drift, an opening of suitable height may be obtained by putting in one set with long posts extending from roof to floor of the proposed station or level. These posts should be of the same thickness and width as the wall and end plates.

72. One Style of Joints for Square Sets.—Although there are several slightly different styles of framing joints for square sets, the method shown in Figs. 21 and 22 has been selected for illustration. The ends of the wall and end plates are shown at *B* and *A*, respectively, Fig. 21. They are made to overlap by cutting down one-half of each, as shown. *E* shows the end of one of the pieces framed ready for the joint, the framing of the ends of both plates being alike. The view at *C* shows the outside of the back of the set, *A* being the end-plate and *B* the wall-plate; *F* is one of the posts which separates the sets. It will be seen that the posts are mortised into the sets, and in the form of joint illustrated the timbers have a miter-joint *D*. This necessitates cutting tenons on the ends of the posts, but makes a neater joint, for the posts appear to simply rest upon the sets. *S* is a $2'' \times 2''$ strip nailed along the back of the center of the outside of each timber in the set. The lagging is set upon this strip.

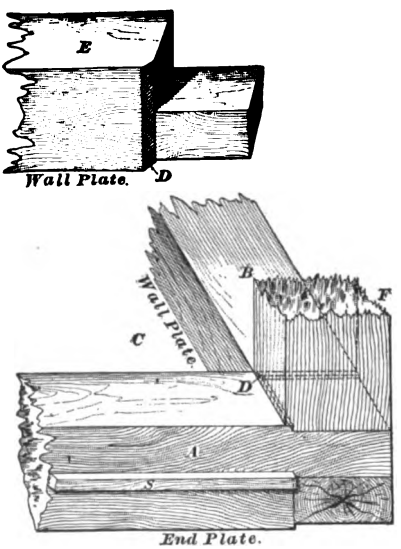

FIG. 21.

All framing on the posts *F* can be avoided by making their mortises the full size of the timber, instead of as shown in Fig. 21. The same may be said of the mortises

for the center posts at the ends of the center girts *C* and *D*, Fig. 18. In Fig. 22 the framing of the center girts is shown. It will be seen that the mortises do not extend into the ends of girts, consequently shoulders are necessary on the posts, as shown at *A*. Under ordinary circumstances, there is no objection to making tenons on the ends of the posts. In Fig. 22 it will be noticed that one center girt goes in from below and the other from above. The advantage of this feature is, that if the timbering has to be kept close to the bottom while sinking, the girt going in from below can be left out temporarily, so as to allow more room for the workmen. When it is desired that there shall be no tenons on the ends of the posts, it is necessary to continue the mortises into

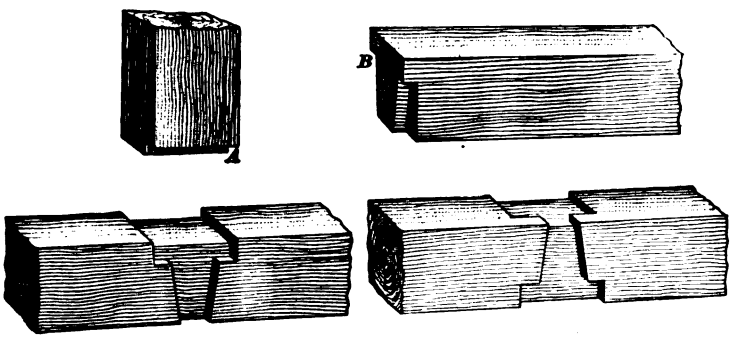

FIG. 22.

the ends of the girts. It will be seen that in the form of joint shown in Fig. 22 considerable chisel work will be necessary, especially in forming the corner at *B*. The work of the joint can be very much simplified by sawing straight through and removing the corners *B*. This has been done in the framing of the timbering, as illustrated in Fig. 17. The timbering shown in Fig. 21 can also be simplified by leaving out the miter at *D*, thus doing away with the tenons on the posts. After the posts of a set (framed as shown in Figs. 21 and 22) are in place, they keep the girts from coming out. When the joints are framed as shown in Fig. 17, any of the girts can be taken out without disturbing the posts.

73. Aim in Framing Joints.—It is the aim in framing all mine timbers to cut the joints in such a manner that the pressure of the ground will always keep the sets in place without the use of spikes or bolts, for the water of the mine always tends to rust iron fastenings, and in some localities the water is of such a nature as to rapidly dissolve them.

74. It is also aimed to so construct the timbering that any piece can be removed and replaced with a new one by simply taking the packing from behind the lagging, and so allowing the set to be spread apart. The other sets above and below are blocked in place while the operation is progressing. The longer the wall-plates (*A*, Fig. 17) used in the shaft, the heavier must be the girts or buntons and end-plates (*B* and *C*, Fig. 17).

75. Size of Timber Sometimes Employed. — Large shafts for prolonged, rapid, heavy hoisting require

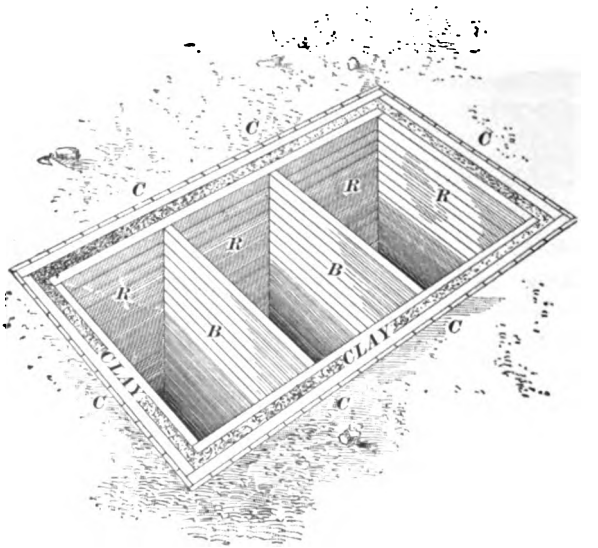

FIG. 23.

very heavy timber. In such cases it is common to use 14″ × 14″ timbers with 3-inch plank lagging even in very firm

ground, but in some cases timbers as large as 24″ × 30″ have been employed. Sometimes diagonal braces are framed between the posts of the set.

76. Clay Dam.—When the upper part of a shaft is very wet, it is possible to construct a double lining with a dam of clay between the two parts; such an arrangement is shown in Fig. 23. This has proved very effective for the purpose of keeping the surface water out of the shaft.

77. Forepoling.—When the ground is very wet and the bottom has some tendency to rise, it may be necessary to

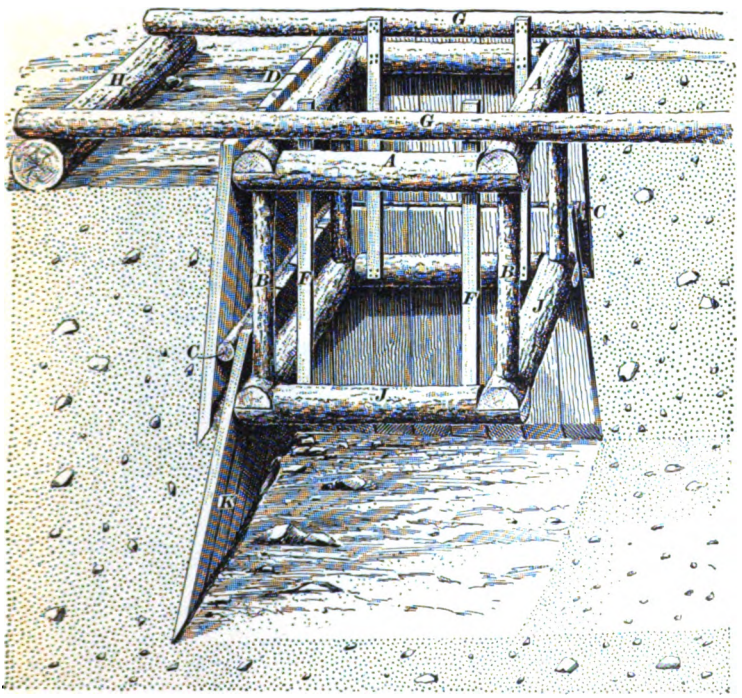

FIG. 24.

resort to forepoling, as illustrated in Fig. 24. In case this is started from the surface, the first set *A A* will be put in position and the lagging *D* fastened to it. The second set *J J*

is placed in position and suspended from the set above, either by bolts or by strips of wood spiked on the inside, as shown at *F F*. Pieces of wood are then secured to the lagging a little above the second set, as at *C*. These pieces are called "tail strips." Lathes or spiles *K* are then driven in front of the tail-pieces and behind the set timbers, the points being forced out into the earth, as shown in the illustration. This enlarges the bottom of the opening and gives plenty of room for the placing of the next set. In Fig. 24 the method is illustrated as applied to a small prospecting shaft. *H* is one of the sills laid on the earth to support the timbers *G*, *G*, from which the sets are suspended. The hanger pieces *F* may be composed of 2″ × 4″ timbers, and those of the upper set are allowed to extend to the timbers *G*, to which they are securely spiked. The supports

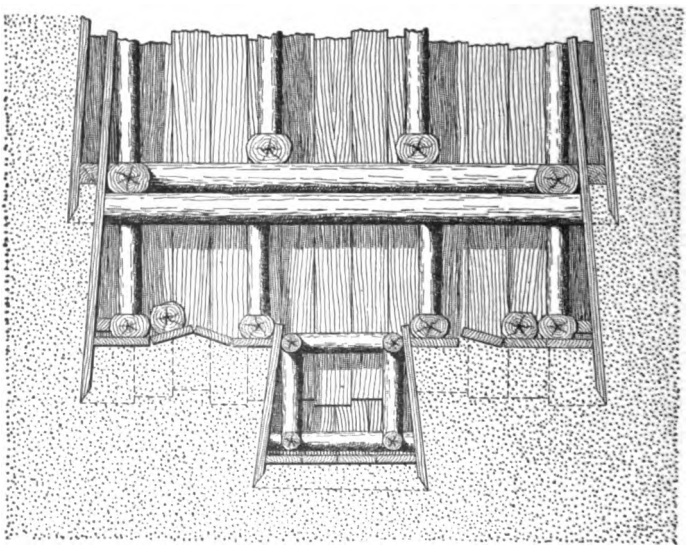

FIG. 25.

for the next set below would be spiked to the other two timbers of the set *J J*. In large shafts hanger bolts are used, as illustrated in Fig. 20. *B*, *B* are the posts which are placed between the sets.

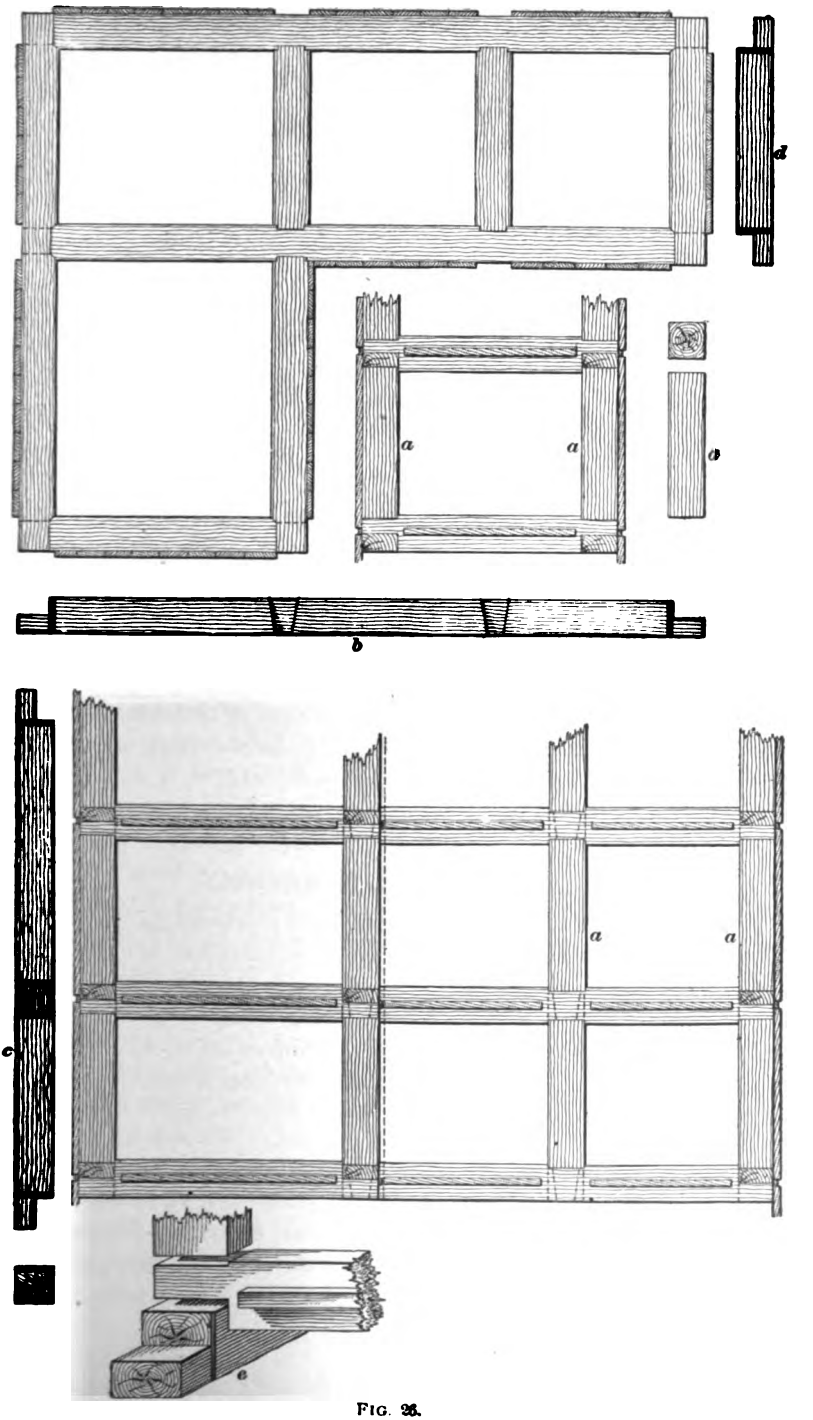

FIG. 26.

78. Breast-Boards.—At times it is necessary to plank the bottom in order to keep it down. (See Fig. 25.) In such a case the material is removed a little at a time, always carrying a sump in advance of the work, from which the pump can draw the water. The boards used to keep down the bottom of a shaft are called breast-boards, and the operation of using them is called carrying breast-boards. In some cases where forepoling is used, the sets may be bridged in a manner similar to that illustrated for tunnel sets. (See Art. **111.**)

79. L-Shaped Shaft.—At the Forman shaft on the Comstock Lode, an "L"-shaped shaft was used, as illustrated by Fig. 26. This is not an easy form to excavate or keep in repair. The only seeming advantage it can have is in regard to the position the pipes, water column, etc., have relative to the hoisting compartment. This form of shaft has not become a favorite among mining men. The style of joints and methods of fastening planking are clearly shown in the figure, *a* being the posts; *b*, the long wall-plate as seen from inside of shaft; *c*, inside edge of long end-plate; *d*, inside edge of short end-plate; *e*, a detail of framing at corner.

SPECIAL FORMS OF TIMBERING.

80. Polygonal Shafts.—In some localities, polygonal timbering with as high as from 12 to 16 sides has been used in shafts. (See Fig. 27.)

In cases where the pressure of the ground is great and this style of timbering is placed layer upon layer like cribbing, it forms an extremely strong structure, but is very hard to repair or replace.

81. Circular Shafts.—Circular shafts are sometimes timbered, but they are usually lined with iron or masonry. The increased scarcity of large timber, its short life, and the rapid corrosion of iron fasteners have led to the use of masonry or iron for permanent ways.

82. Timbering in Swelling Ground.—When a shaft is timbered through ground that has a tendency to swell, it is not intended that the lagging should resist the swelling, for in that case the entire structure would be crushed, but the lagging is made just strong enough to keep the ordinary material in place, and when it is seen to be bending or breaking (from the swelling of the mate-

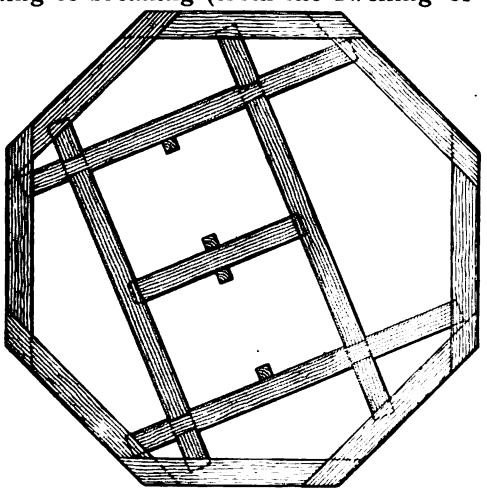

FIG. 27.

rial back of it), a portion of the lagging is removed and some of the swelling ground excavated so as to relieve the pressure. No timbering could be made strong enough to resist the swelling of some ground, but by relieving the strain from time to time no trouble need be experienced.

83. Drip Boards.—Shafts sunk through wet strata are likely to give more or less annoyance by constant dripping from the timbers, unless means are provided for leading the water behind them. Dripping can be prevented by using a double lining and packing the intervening space with clay; yet, owing to the scarcity of clay, at least in the vicinity of gold and silver mines, other methods must usually be adopted.

Light strips $\frac{3}{4}'' \times 1''$, fitting neatly between the posts, may be nailed on the front edge of wall and end plates, and two or

three ½-inch auger-holes bored through the lagging in each compartment. These holes are started at the rear edge of the plates and point diagonally downwards through the plank lagging. In extreme cases it may be necessary to set inch boards (*A*, Fig. 28), reaching from the under front edge of one plate to the upper rear edge of the next one below.

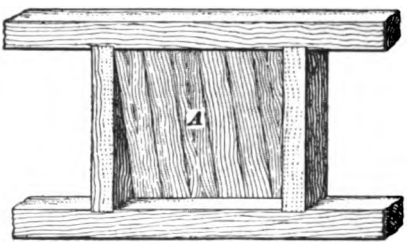

FIG. 28.

After the hanger bolts are withdrawn, considerable water will pass through their remaining holes to the slanting boards below, should such an arrangement be desirable.

MASONRY AND METAL SHAFT LININGS.

84. General Form of Masonry Linings.—The use of masonry in a shaft presupposes ground that will stand

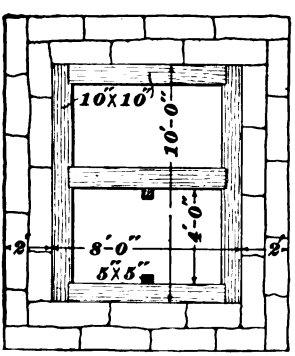

FIG. 29.

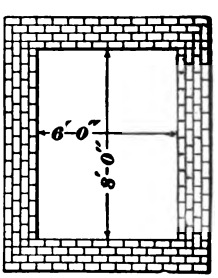

FIG. 30.

for a couple of weeks without support. In some cases when but little pressure is expected upon the shaft, the walls are built straight, as shown in Figs. 29 and 30, but it is usually best to give them a curved outline, as shown in Figs. 31 and 32. In some cases, masonry linings are circular or elliptical.

85. Support of Masonry Linings.—The masonry linings used to be supported upon wooden cribbings or

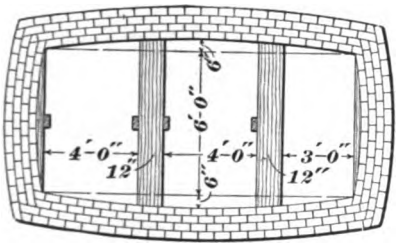

FIG. 31.

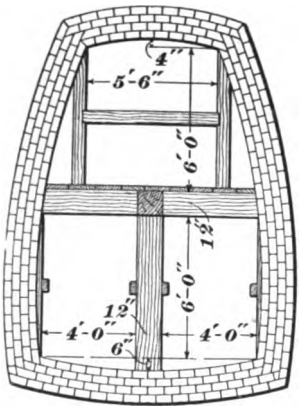

FIG. 32.

wedge curbing built in bell-shaped cavities cut in the shaft walls, but now cast-iron rings made in segments are used,

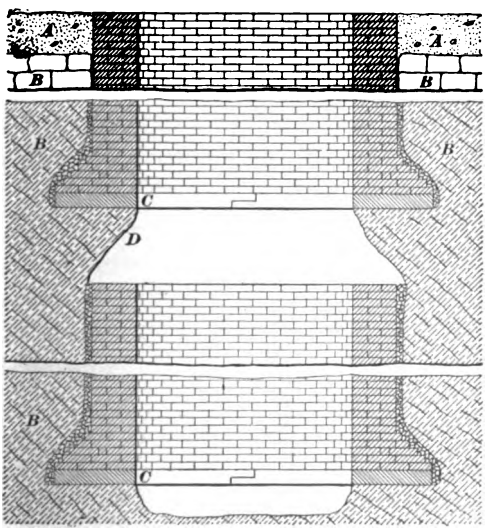

FIG. 33.

as shown at *C*, Fig. 33. As the second portion of the

masonry is constructed from below, the ledge or rock *D* is cut away, a little at a time, and the masonry carried up so as to support the ring *C*. Sometimes blocks of artificial stone are substituted for iron rings. In this case the blocks are given beveled bearing in the rock, as shown by *A*, Fig. 34. By this means much of the downward pressure (caused by the weight of the lining) is transferred into a

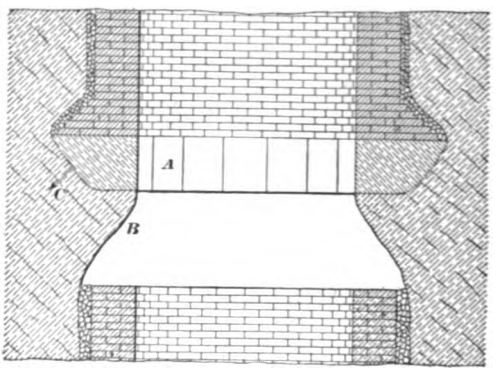

FIG. 34.

thrust in the direction of the arrow *C*. The portion *B* is cut away as the masonry is built up from below.

In Fig. 33, *A* represents the loose soil near the surface and *B* the rock through which the shaft passes.

86. Filling of Space Back of Masonry.—All the space back of the masonry should be securely filled, either with excavated material or with grout work. At times the waters carry in solution material which will tend to cement the filling together, and in that case grouting will be unnecessary.

87. Masonry Built at Surface or Supported from Surface.—Sometimes masonry linings are built in sections at the surface and lowered into place. In other cases, the masonry linings have been built on top of a shoe or casing, the lower portion of which was shod with iron. The weight of the masonry would force this casing into the earth and

the workmen would excavate the material from beneath it, more of the lining being built on at the surface as the sinking progressed.

Sections of the stonework have also been supported by means of iron rods from above.

88. With a shaft 13 feet in diameter on the inside, a brick wall four half-bricks thick was used.

89. Comparison of Masonry and Metal Linings.—Masonry is heavy to support and is as expensive as iron; for these reasons iron has been substituted in many cases. It is estimated that under ordinary circumstances the initial cost of iron in place is equal to that of masonry and twice that of wood; but the cost and maintenance of the iron is one-third that of the wood and nearly the same as the masonry, if the shaft is dry.

90. Metal Linings.— Metal linings may be of cast iron made up in sections, or they may be composed of sheets of mild steel, strengthened by rings or frames of I beams, channels, or other structural shapes. When a metal lining is used in a shaft, it is usually built on in sections at the bottom, and in that case the sections are, at least temporarily, supported from above. Sometimes the sections are built on at the surface, the lining being forced down as the work progresses; at other times the linings are built from below up in sections of 25 or 30 feet, the sections being supported in hitches, very much as in the case of masonry.

91. Railroad rails may be bent into rings and planking fitted behind them. This makes a very good form of lining for a temporary shaft.

92. Concrete is the best packing to use back of metal shaft linings.

93. Water-Blast.—If the strata passed through contain gas, the space back of the masonry or metal linings should be provided with vents or relief-valves, for if the pressure of gas in spaces back of the lining were suddenly

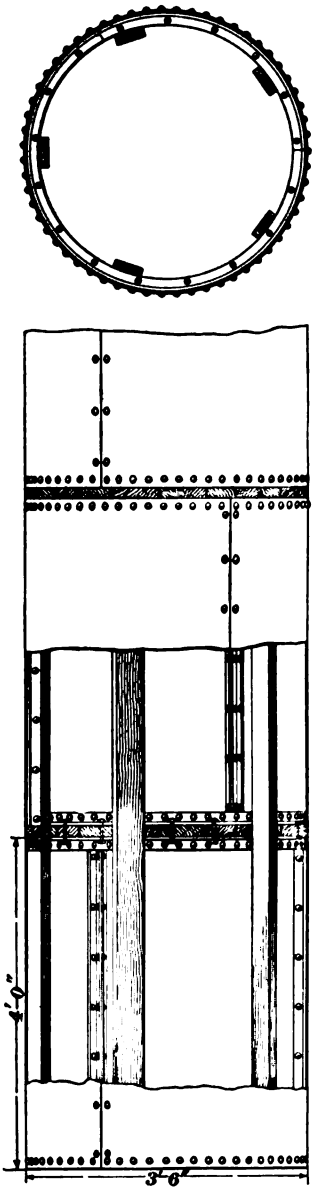

FIG. 35.

relieved (by the escape of the gas), the gas in some open space farther back in the ground might force water into the connecting passage against the shaft lining with such force as to destroy it. This action is called the water-blast.

94. Metal Lining for Small Shaft.—Fig. 35 illustrates a metal lining for use in a small shaft, where the hoisting is done by means of a bucket. In this case the lining is composed of $\frac{1}{8}$-inch plates supported on $1\frac{1}{2}'' \times 1\frac{1}{2}'' \times \frac{3}{8}''$ angle-irons. A layer of oak plank is placed between the sections of lining; oak guide strips made from $1'' \times 4''$ strips are placed in the shaft as shown. The object of this is to keep the bucket from swinging against the angle-irons. This form of lining has been very successfully used in zinc mines where the overlying material was simply clay, the shafts not being very deep. The linings are usually recovered when one shaft is worked out, and hence may be used in another.

95. Use of Metal and Masonry Linings at Metal Mines.—Metal or masonry shaft linings are not often employed in metal mines, though there are

a few locations in which they have been installed and have proved very successful. In most cases, and especially in the United States, timber has proved cheaper and better than either masonry or metal for a short time. One reason for this is that many of the metal mines are kept open only for a few years, and where this is the case the life of the timber lining is sufficient to serve during the removal of the ore.

96. Cage-Guides. — Fig. 36 shows two methods of framing the ends of cage-guides and of securing the guides to the shaft timbers. In shafts where cages or skips are used, the guides should be so joined that there is no likelihood of their warping or projecting beyond their plane and thereby jamming the cage or skip, which is a very dangerous occurrence and a great strain on the cable. It has been the common practice for years to overlap the ends of the guides and secure them with a single lag-bolt, as shown at *A*, Fig. 36. An improvement on this plan, with a view to greater safety, joins the adjacent ends of the sections with a simple tongue and groove, the ends of each being secured with a lag-bolt, thus rendering them doubly secure. This is shown at *B*, Fig. 36. Spikes or nails should never be used in securing cage-guides, as it requires too much time to remove a section for repairs.

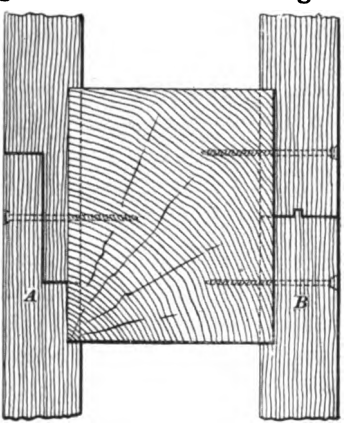

FIG. 36.

97. Trap-Doors. — When trap-doors or covers are used at the top of a shaft, they should be inclined so that any material falling upon them will have a tendency to glance, thus reducing the liability of its crushing the doors. Stops should be provided to prevent the doors from remaining open, so that in case no one is at the surface to open

them when the bucket comes up, it will simply lift the doors and pass through, the stops immediately closing the doors, and thus preventing anything from falling down the shaft. When doors are used on a shaft, some special means of ventilation must be provided.

TUNNELS AND TUNNEL LININGS.

GENERAL CONSIDERATION.

98. Divisions.—Tunnels, like shafts, may be divided into two classes: permanent, and temporary or prospecting tunnels. The advantages and disadvantages of tunnels, as compared with other forms of openings, have been treated elsewhere.

99. Grade.—All tunnels should have a grade towards the mouth sufficient to afford drainage. One foot in 200 is usually considered about right for this purpose. The theoretically perfect grade would be one on which the work of returning the empty car to the face would be exactly equal to that of bringing the loaded car out again; but owing to the fact that timber and supplies have to be trammed in and that the track is not always in uniformly good condition, this perfect grade can never be attained, though for most purposes the one mentioned above approaches it very closely. In the case of short tunnels where the tramming is done by hand, it is sometimes customary to use a grade of 1 foot in 100.

100. Safety.—As a rule, the workmen run far less risk in driving a tunnel than in sinking a shaft, as there is no danger of anything falling upon them from a great distance, as is the case when working in a shaft, and the material and water are disposed of with less machinery.

101. Size.—The size of a tunnel is determined by the desired output, and may vary from $4\frac{1}{2}' \times 6'$ to $8' \times 10'$, or

even larger. Fixed rules can not be given as to when tunnels should be built for single and when for double track; the probable character of the ground, with its consequent ratio of expense between driving moderate and large-sized tunnels, is variable; this, together with the estimated output and length of a tunnel, produces an endless variety of complications. The tendency is towards double tracks for short tunnels, and a single track, with switches at the passing points, for long ones. To illustrate the difference in cost, the following estimate is given: Suppose a tunnel driven in fairly good ground to cost $20 per foot for single and $28 per foot for double track dimensions; if the length is 300 feet, the total difference in cost is $2,400; but if the length is 3,000 feet, there is a difference of $24,000. A double track might be worth the smaller amount, while it would not justify the larger expenditure. All tunnels should be wide enough to allow ample room for an air-pipe on one side and for the men to pass moving cars in safety. Where the deposit or vein is parallel to the face of the hill and comparatively near the surface, it may be worked to advantage by driving a number of short parallel tunnels to the deposit. This reduces the distance of underground haulage, and in the long run may be the cheapest means of working such deposits.

102. Form.—Most tunnels driven for mining purposes are lined with timbering, and hence have a rectangular or nearly rectangular form. The style of timbering and form of joints are largely determined by the importance and expected life of the tunnel, more care being bestowed on these details if it is necessary that the tunnel be kept open and in use for many years.

103. Some Examples of Mining Tunnels.—At Freiberg there is a series of tunnels driven to drain and work the mines, the aggregate length of which is something over 24 miles; at Clausthal there is a similar series over 11 miles long; in Cornwall, Wales, there is a series over 30 miles in length. The Sutro Tunnel, in Nevada, which was

driven to drain the great Comstock Lode, is over 5 miles long; and there are at present, completed or in process of completion, a great number of other long mining tunnels; but in all cases the tunnels referred to have been driven long after the mines proved their value by a continued output, the tunnels being driven to facilitate the working of the properties. There is hardly a case on record where a long tunnel has been driven for purely prospecting purposes that has proved a paying investment.

104. Drilling.—When rock is encountered in a tunnel, the first drilling is usually done by hand, and in the case of a prospecting tunnel this may continue throughout the work; but if it is intended ultimately to install an air-compressor plant, or if the work is of sufficient magnitude, it will be best to install the plant and use power drills from the first, as with their aid much more rapid driving can be done.

105. Tunnels Connected with Interior Shafts.—Tunnels are sometimes connected with interior shafts, in which case there must be suitable space for handling cars and material. It is a good plan to make the station at the shaft of as small an area as possible (on account of inconvenience in timbering large openings), and provide room for cars by widening the tunnel, putting in one, or if need be, two, side-tracks leading away from the station and connecting with the main line at their outward termini. If the tunnel is double-tracked, side-tracks will hardly be needed.

LININGS.

TIMBERING.

106. Posts and Breast Caps.—In the case of a prospecting tunnel in firm rock, little or no timbering may be required, but all permanent tunnels should be lined, no matter how hard or firm the strata they penetrate. In the case of a fairly firm roof, a few posts with breast caps may be used, as shown by Fig. 37.

107. Square Sets.—In somewhat more yielding ground a simple form of square sets will answer, as shown

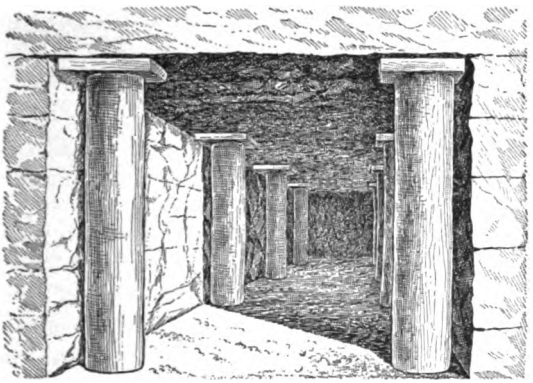

FIG. 37.

by Fig. 38. In a prospecting drift, the caps *B* and the legs *A* may be composed of sticks about 6 inches in diameter, and

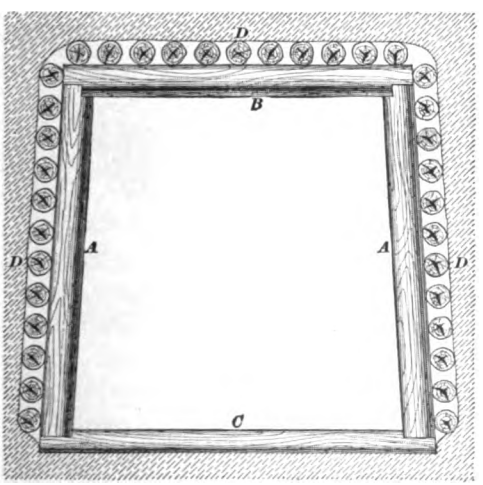

FIG. 38.

the sill *C*, made from a similar stick, hewed to about 3 inches thick, the width remaining the same as the diameter of the

posts. The joints cut in the cap and sill for the legs to bear against should never be more than one-third of the depth of the timber.

This form of set will resist pressure from either top or sides. Where the floor of the tunnel is fairly firm, the sill *C* may be omitted, the bottoms of the posts being set in small pits or hitches.

When sills are used, the posts should be dressed on the inside to give them a good bearing against the notches cut in the ends of the sills.

108. The posts should always be given a slight inclination, as shown in the illustration, for this gives the set the strongest form to resist pressure from above and from the sides. When it can be obtained, round lagging is to be preferred; but in its absence, either split lagging or plank may be used.

109. Starting a Tunnel.—In starting a tunnel, it is usually carried into the bank as an open cut until sufficient

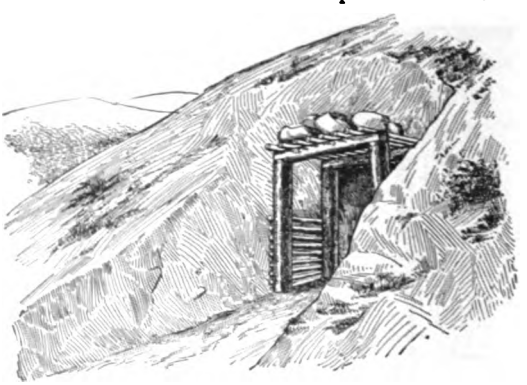

FIG. 39.

depth for the face is obtained. If the material is not strong enough to be undercut, it may be held in place temporarily by building two sets, as shown in Fig. 39, and driving long lagging over the tops of them and into the earth beyond. Now, by weighting the back end of these laggings with stones, they can be made to carry the earth resting upon

their forward ends until another set has been placed before the two already mentioned. From this point the work can be carried on by forepoling, in case the ground is at all bad.

110. Placing a Set.—In placing a set, the timbers are first erected and temporarily held in place by blocking placed against the roof or sides, or by a strip of material nailed to the next preceding set. In a case where the ground is fairly good, but lagging is required on the sides as well as the top, it is placed commencing at the bottom and working up, all the space between the wall and the lagging being packed with excavated material. It is sometimes better to use blocks of wood for packing above the lagging on the roof than to use excavated material. Great care should be taken, in blocking the sets permanently into place, to see that the load comes upon them at the corners and not in the center of the sticks, as, were the latter the case, the sticks would be almost certain to break.

111. Bridged Sets.—In case it is necessary to use forepoling, the sets are usually bridged. Fig. 40 illustrates a set having bridges on both top and sides. *A* are the posts; *B* the cap; *C* the sill; *D* the side bridging; *E* the top bridging, and *F* the piece used to keep the bridge away from the set proper. It will be seen that this leaves spaces about the regular set. If the character of the ground is such as to indicate the necessity for forepoling, one of these bridged sets is placed in position and the lagging extending forwards from the preceding set placed outside of the bridge.

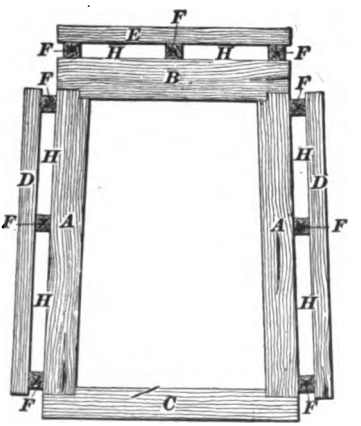

FIG. 40.

112. Spiling.—Lagging intended for spiling should be cut about 18 inches longer than ordinary, the front ends

being pointed and the rear ends left square; such lagging is driven through the space marked *H* in the set. The ends of the lagging are forced out and into the earth of the

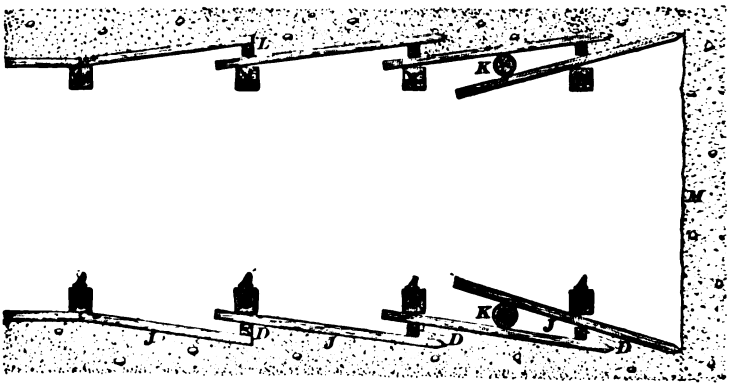

FIG. 41.

sides or top of the drift by means of tailing pieces, as shown in the horizontal section at *K*, Fig. 41, or in the vertical section at *N*, Fig. 42. In this way the material can be kept

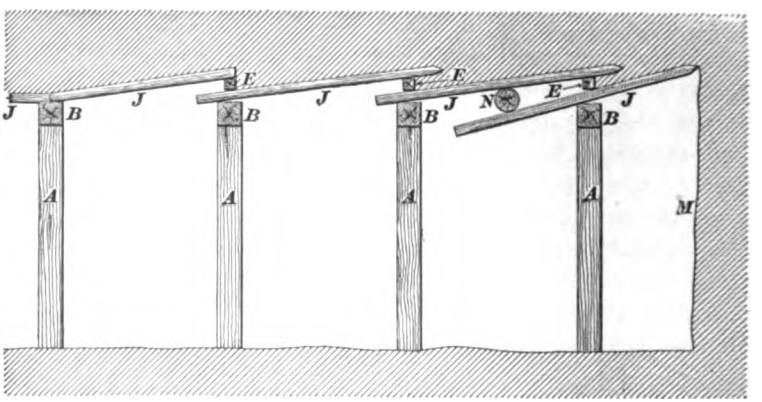

FIG. 42.

from caving into the opening until a sufficient distance has been gained to introduce another set. After the new set is in position, the tailing pieces can be knocked out and the

lagging allowed to settle against the bridge of the new set. In case it suddenly becomes necessary to introduce spiling and a bridged set has not been placed, it may be possible to force spiling under the lagging already on top of the set, and thus to gain sufficient distance for the introduction of another set which has been bridged.

113. Breast-Boards.—Spiling or forepoling is especially adapted to wet, heavy ground. As a rule, such ground stands fairly well after the water is once drained out. In case the ground partakes of the nature of quicksand, it may be necessary to support the breast of the drift with boards braced from the nearest sets. This is called carrying breast-boards.

114. At the first signs of yielding ground, the sets should be bridged so that spiling may be commenced at any time.

115. Driving a Tunnel by Wedging.—In some cases in which the ground is a very fine quicksand or loam, it has been possible to drive the drift by simply wedging all or most of the material out of the way. In this case no excavated material has to be trammed out. Fig. 43 illustrates this method of work. *A* are the posts of regular bridge sets; *B* the caps; *G* the bridging pieces; *H* the tailing piece; *C* are ordinary spiling used to support the top and sides of the opening; *D* are wedges driven into the face by means of a ram. These wedges simply crowd the material away from in front of the excavation. In case the pressure becomes so great that the wedges can be driven no farther, it may be necessary to bore a few auger-holes into the face, and so relieve the pressure by allowing some of the material to flow into the drift. The ram for driving these wedges usually consists of a piece of timber swung from the roof. *E* represents wedges driven into the floor as fast as those in the face advance. These wedges have to be driven with a mallet, and are ultimately covered with a plank

floor *F*. This method has been successfully used in a number of cases where the ground was extremely bad.

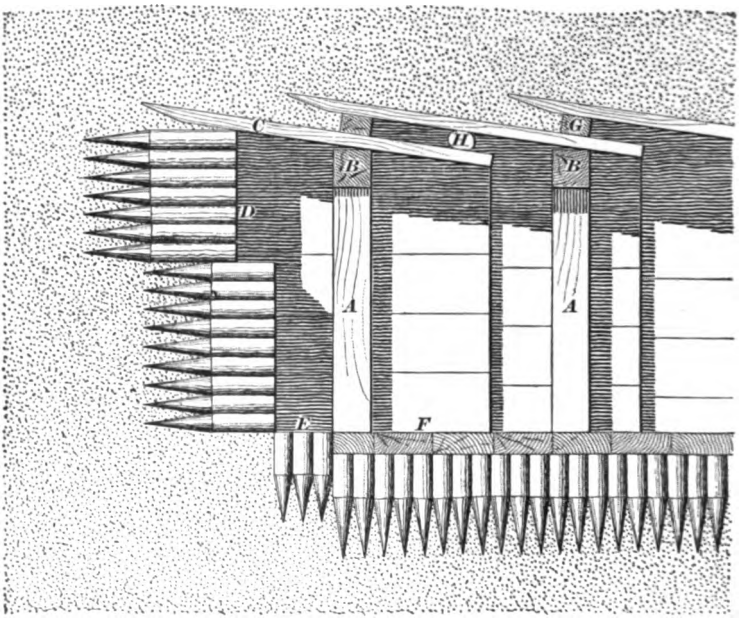

FIG. 43.

116. Amount of Material to be Removed.—Where material is excavated from the face of the tunnel, great care must be taken not to remove more material than is necessary, for all additional material removed must cause a shifting or sliding of the earth, which brings extra strain upon the timbering.

117. Sprags and Special Braces.—In placing the timbering of a tunnel, great care should be taken to see that the sets are plumb and that all the joints have a good bearing. If this is not done, strains will come upon the timbers irregularly, which is almost sure to break them. When there is danger of the sets being displaced by blasting, sprags may be placed between them, as shown by *C* and *D*, Fig. 44. In Fig. 44, *A* are the posts, *B* the caps, *C* the

upper sprag (collar brace); *D* is the lower sprag (foot or heel brace); *E* and *E* represent diagonal braces, which are sometimes used in swelling ground where the strains come upon the timber in a very irregular manner. *F* represents the framing of one of these diagonal braces. It will be seen that they are halved together in the center.

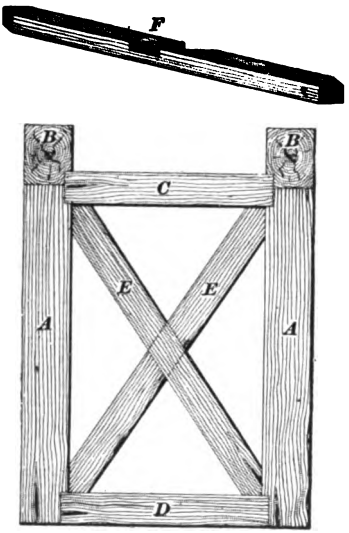

FIG. 44.

118. Distance Between Sets.—The distance between sets is determined by the character of the ground, and may vary from a few inches to 7 or 8 feet.

119. Factors Which Determine the Size of Timber.—The size of the timber depends upon the strain it is expected to bear, but it is considered better practice to increase the number of timbers rather than their size; that is, to place the sets closer together while using the same size timber. The principal objection to heavy timbers is the great difficulty of handling and placing the sticks under ground and their cost.

120. Advantages of Sawed Timber.—In all tunnels intended for permanent use, it is best to used sawed timber, as it has the following advantages:

1. It is easier to frame and to replace.
2. It makes a much neater looking job.
3. The bark and greater part of the sap-wood being removed, the timber is not so liable to rapid decay, and in case decay should occur, the timbers are more easily examined.

121. Sizes of Timber in Common Use.—In tunnels having an area of $4\frac{1}{2}' \times 6'$ in the clear, it is common to use $8'' \times 10''$ posts and $10'' \times 12''$ caps, though sometimes the posts may be $10'' \times 12''$ and the caps $12'' \times 14''$. The sprags would vary from $4'' \times 4''$ to $8'' \times 8''$, depending upon the character of the ground. Sprags should always be so placed as to catch both cap and post or post and sill.

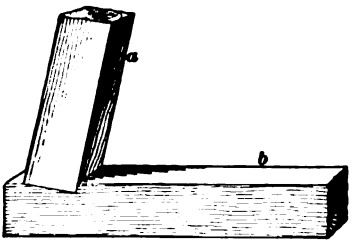

FIG. 45.

122. Simple Joint for Sill and Post.—In simple timbering, with sawed material, the joint shown in Fig. 45 is sometimes used to join the post to the sill. It will be seen that the post *a* is simply cut off square on the end and all the dressing is done on the sill *b*.

WATER.

123. Drainage.—The water flowing out from the tunnel should be carefully provided for. In case the floor is hard rock and the flow of water is small, it is sometimes sufficient to excavate a small ditch at the side of or under the track, the water being allowed to flow upon the bottom of the tunnel. When the flow of water is large, or the bottom of the tunnel is of such a character as to be rapidly washed away, it is best to provide a flume for the water. This is usually placed under the car-track, as shown in the illustration of the Ontario Mine Tunnel, Fig. 47. Great care should be given to the proper drainage of a tunnel, as the life of the timbers may be very much shortened by changes in the flow of water from one part of the tunnel to another in such a manner as to leave the timbers alternately wet and dry.

124. When a tunnel is provided with a good flume for carrying out the water, the grade can be reduced, and hence the depth of the inner end of the tunnel below the surface will be increased.

REMOVAL OF EXCAVATED MATERIAL.

125. Remarks.—In the case of a small prospecting tunnel in the neighborhood of 50 feet in length, the excavated material is usually removed with a wheelbarrow, thus avoiding the laying of car-tracks. If the tunnel is longer than this, it is generally provided with a track and cars. At first the cars are pushed out by hand, but as the length increases, mules are introduced and the cars drawn out in trains.

126. Tracks.—A cheap track may be made by using $2'' \times 4''$ or $2'' \times 6''$ wooden stringers and spiking a band of

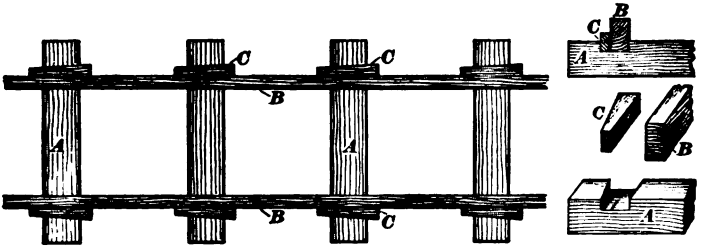

FIG. 46.

iron upon the edge of the stringers. It is best not to spike the stringers to the ties, on account of the fact that where stringers are spiked to the ties it is much harder to replace either the track or the ties than where some adjustable fastener is employed. Also, spikes corrode very rapidly in mines, and their use should be avoided as much as possible. Fig. 46 illustrates a method of securing wooden stringers by means of wedges. At the left of the figure can be seen a plan of a portion of the track; *A* are the ties; *B* the stringers; *C* the wedges. At the right of the figure there are two illustrations showing the method of fitting the pieces together.

Light-weight steel rails, weighing from 8 to 12 pounds per yard, may be employed. Mines having a somewhat heavier output sometimes use very much heavier rails underground, a few power-haulage systems and skip-roads being provided with 60-pound rails.

127. Passing Points.—In ordinary tunneling along the vein, occasional short switches will be necessary at passing points; and where there is stoping to be done overhead, the roadway should be widened at intervals to make room for storing timbers.

128. Frogs.—Cross-cut tunnels, upon intersecting the vein, should have their tracks diverged by means of frogs or other switches, so that cars can pass in or out, to either right or left, without running onto flat sheets.

129. Ties.—The ties are placed from 24 to 30 inches apart. Great care should be taken in laying the tracks in a tunnel which is expected to be used as a permanent haulage-way.

130. Cars.—The cars used for removing the material from the tunnel are usually the ordinary mining cars having a capacity of from 10 to 20 cubic feet.

SWELLING GROUND.

131. Definition.—Swelling ground may be wet or dry, and usually gives but little trouble during excavation. When the material is exposed to the air, chemical changes set in which cause it to swell. At times, nothing seems able to resist this swelling action.

132. Timbering.—In timbering an opening through such ground, the best method seems to be to use fairly strong timbering, and to excavate some of the material behind it whenever the swelling begins to exert an undue pressure upon the sets. The lagging is usually light and open in construction, and by its bending or breaking the miner is warned that the sets are in danger of being crushed and must be relieved. In other cases, the pressure is not so great, and very strong timbering set close together will be able to resist it without any special relief. Fig. 44 illustrates a form of timbering and bracing, already described, which has been much used to resist swelling ground.

133. Bridging or False Sets.—The term "bridging" is sometimes used to designate a false set placed outside of the regular set to protect it against the action of the swelling ground. This false set may be composed of as heavy timber as the original set. Such sets were used in the *Ontario Mine Tunnel, No. 2, near Park City, Utah, and the following description is given substantially in the words of Mr. J. H. Keetley, superintendent in charge:

134. Ontario Mine Tunnel, No. 2.—"Relating to our mode of timbering swelling ground, side pressure is taken care of by the ordinary style of bridging. The timbering over the caps is done with timber of the same size as used in the set below, but is placed in the shape of an inverted V, thus ∧, or similar to the rafters of a building, with as many cross braces as are thought necessary. We used two, also three side braces—one at the apex, the other two near the foot. (Corresponding to collar and foot braces.)

135. "The foot of this set rests upon the cap directly over the posts. We usually put from 1 to 2 feet of the blocking on the cap at this point, and then put the ∧ set upon the blocks, thus permitting the taking out and raising up of the regular set (by removing a portion of the blocks)

*This tunnel was completed in the latter part of 1894, and has a total length of about 15,000 feet. The sectional area in the clear has a height of 8½ feet divided as follows: Tunnel proper, 6 feet high, 4 feet wide at the top, and 5 feet on the floor; below the floor, or car-track, is a water ditch 2½ feet deep and 5½ feet wide on the bottom. Although in some portions of the tunnel there was good dry ground, in others there was swelling ground and floods of water. The flow amounted to as much as 10,000 gallons per minute for some time, and on one or two occasions, floods occurred which caused a temporary cessation of work.

The car-track has 18-pound T rails and a 20-inch gauge. It rests on sills 6" × 10", covered with 3-inch plank, to which the T rail is spiked. Tram-cars were hauled out in trains with mules. At distances of 1,000 feet in the tunnel, sidings were put in to allow trains to pass each other.

Two air-drills were kept going in the face in eight-hour shifts. The 20-inch air-line (Fig. 47) was connected with a Root blower and used sometimes for ordinary ventilation, but its chief function was to clear away smoke after blasting; at such times it was operated as a suction-fan and cleared the face in a few minutes.

without disturbing the upper or $\wedge$ set in case your timbers have settled downwards. This can be done at least twice before it becomes necessary to raise the upper set.

136. "Besides, if we did not have the upper set, the roof would have to be caught up with a false set while raising the regular set; but, having the upper set, it can be easily and quickly caught up with stringers, and the lower set speedily raised without delaying traffic, and without putting up a false set, which takes up much time. The apex of the $\wedge$ set is 4 feet above the top of the lower (regular) cap. This gives ample room for men to work above the regular set and ease the roof and take care of their dirt until it can be trammed away. Side bridging is used upon the $\wedge$, the same as upon the regular tunnel sets below. We do not use sills in swelling ground, as we find that it multiplies our troubles. We tried bases 3 feet square under each post, some of rock and some of plank, but the heave of the swell coming very unevenly would tilt posts off their base and wreck the whole set so much that this method was abandoned. The chief pressure on our timbers came from the roof downwards. This was caused by the great weight of water from above, percolating through the brecciated strata; when this ground is relieved by drainage, I am satisfied that the pressure will be less. Regarding soft running ground, the same methods were adopted as are employed elsewhere in such cases, except that where the ground was very heavy upon the spiling, and they could not be driven in by hand, we shod them with 1½-inch iron, and drove them with a 3½-inch Ingersoll drilling-machine with 90 pounds of air, which proved quite successful."

137. Fig. 47 shows a cross-section giving a front view of an entire upper and lower set. A, A are the posts of the regular (lower) set; B is the cap of the same; E, E is the $\wedge$ or upper set, which has a cross brace F; G, G is the bridging of the upper set, and H, H are the lagging. The sills J are to support the 3-inch plank K, which forms the floor of the drift and on which the car-track is laid. G, G are the

bridging of the lower set. The dotted squares show the position of the horizontal braces or sprags extending from this to the next set. The set is lagged in the usual way, except that the lagging is behind the bridging. The bridging really constitutes a shell, which partially protects the set

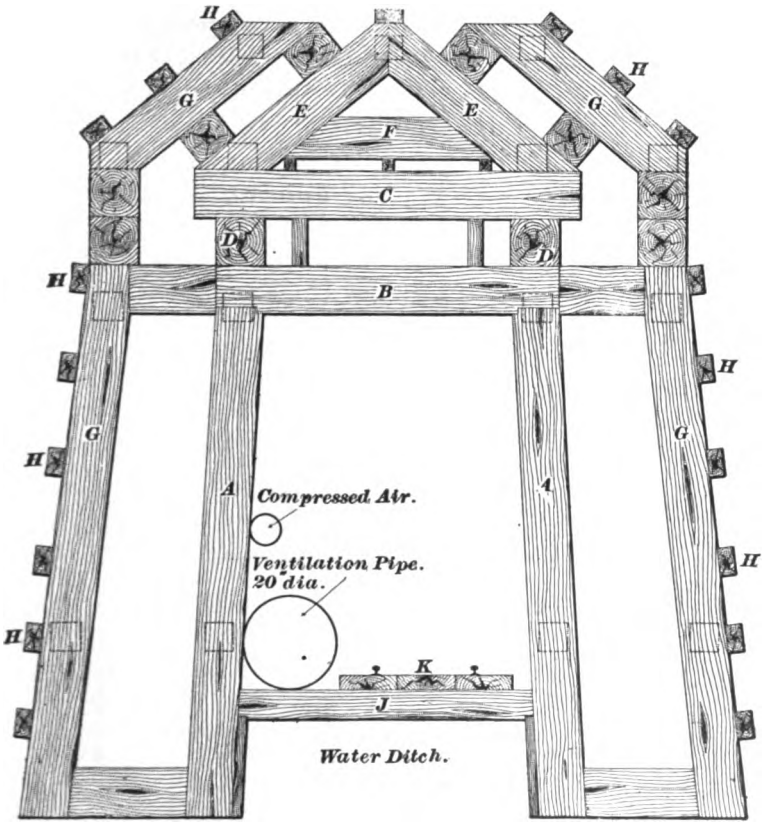

FIG. 47.

proper and greatly facilitates the excavation of ground in the case of serious swelling. If only the usual tunnel sets are employed, there is more danger of their being totally crushed, and in excavating to relieve the pressure the roadway would be blocked, thus interfering seriously with the

traffic. *C* and *D* represent blocking placed over the regular set and below the upper or false set and its bridging.

138. Special Form of Timbering.—A form of timbering which has been very successfully used to resist swelling ground is shown in Fig. 48. It will be seen that the general effect is to shorten all the members, thus reducing the transverse strain upon each stick.

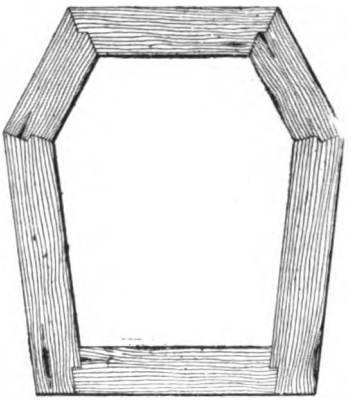

FIG. 48.

139. Posts in Center of Tunnel.—In large tunnels the roof may be supported by braces, or additional posts set in the center of the tunnel. This is illustrated by Fig. 49, which is a cross-section of the timbering used in the Sutro Tunnel.

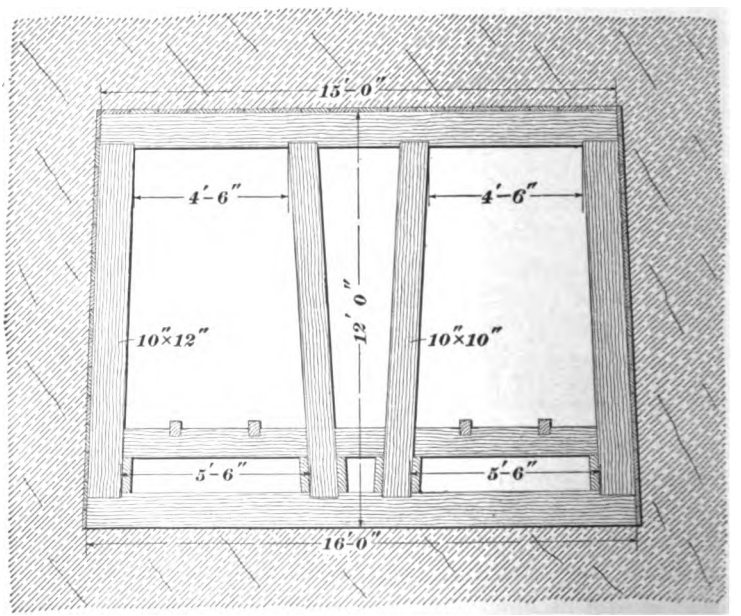

FIG. 49.

SPECIAL METHODS.

140. Metal Shield.—In very soft materials, tunnels have been driven by forcing an iron casing through the clay or other material, the permanent lining being built as fast as the shield advanced.

141. Pneumatic Method.—The pneumatic process has also been applied to tunnel work as a means of keeping water from flowing into the excavation. (For general description of the pneumatic process, see Arts. **169** to **180.**) Large tunnels are sometimes driven in benches.

PRECAUTIONS TO BE TAKEN IN WET FORMATIONS.

142. Advance Holes.—When tunnels are being driven in rock which is liable to contain pockets of water under great pressure, it is best to keep drill holes well in advance of the work, both on the sides and before the face. Such bodies of water have been discovered having a pressure due to several thousand feet of head. By bursting suddenly into the opening, the water has caused great damage and loss of life.

143. This precaution of drilling holes in advance of the work should also be employed when approaching abandoned workings which are liable to contain water.

144. Advantage of Draining the Ground.—When driving a tunnel through material containing much water, it is often best to proceed slowly, allowing the water time to drain out of the formation, and so prevent any sudden rush of soft material into the opening.

INCLINES OR SLOPES.

GENERAL CONSIDERATION.

145. Definitions.—A shaft, properly speaking, is a perpendicular opening into a mine.

A tunnel or adit is an opening into a mine with sufficient grade to make it self-draining.

Any other opening into a mine must have some angle

between the two mentioned. Such an opening is called an incline or slope.

146. Advantages.—An incline usually follows the dip of the vein, and hence it is in the ore. On this account, inclines, like adits, when in the ore, may pay all or part of the expense of opening.

147. An incline may follow the vein through its various dips and angles, thus remaining in the ore and exploring the deposit throughout its entire length. When an incline in the ore is used, no cross-cuts are required.

148. One advantage of an incline is that pockets and special self-dumping arrangements are more easily constructed and maintained at the head of an incline than at the head of a shaft; and as in metal mining much of the material is brought to the surface in skips, this fact alone has caused the incline to be adopted rather than the shaft in many localities.

149. Disadvantages.—The mine water has to be removed from an incline by mechanical means, as with a shaft, but it is more difficult to arrange a pumping plant in an incline than in a vertical shaft.

150. Where an incline is used, the miners must pass to and from their work by means of ladders, stairs, or a man engine, or be hoisted in special slope carriage. In a very flat incline, men may ride in the mine-cars, or may walk, as in a tunnel.

151. Location.—The site or location for the head of an incline is selected, as in the case of a shaft, with respect to the expected development of the mine and the future location of buildings and other surface improvements. In a steep incline the number of compartments would be the same as with a shaft of equal capacity, and the compartments are usually arranged side by side, that is, as though the shaft had been laid down upon its side.

152. The position of an incline with respect to the foot and hanging walls has been considered in Art. **33.**

153. Size.—The size of an incline, like that of a shaft, depends upon its expected output and the pitch of the vein. $4\frac{1}{2}' \times 6'$ in the clear is a very common size for the compartments. In flat inclines, care must be taken to see that there is always sufficient headroom.

154. With a flat incline, it becomes impossible to support a very wide opening, hence more than two compartments are rarely, if ever, seen.

155. Examples of Cases in Which Inclines are the Best Form of Opening to Be Used.—In Fig. 50 there is illustrated a steep vein dipping into the face of the

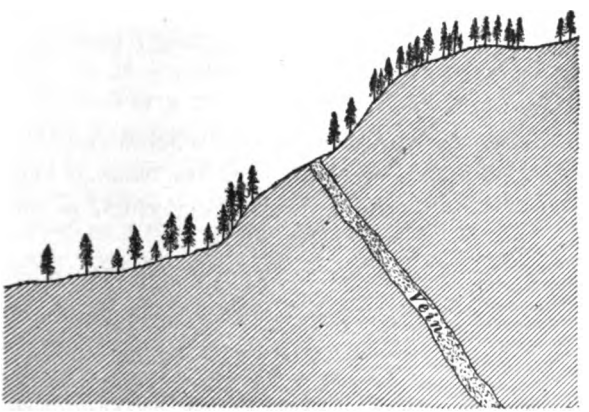

FIG. 50.

mountain in such a manner that the cross-cuts would have to pass through a large amount of barren rock. If the shaft were located above the vein, all the ore would have to be hoisted very much higher than the outcrop, while if it were placed below the outcrop, the cross-cuts would be of an ever increasing length. In as steep an incline as this, skips would probably be used for bringing out the mineral.

Fig. 51 illustrates a case in which, no matter where the shaft were located, the cross-cuts would be of an extremely great length. Such a flat vein could be worked by means

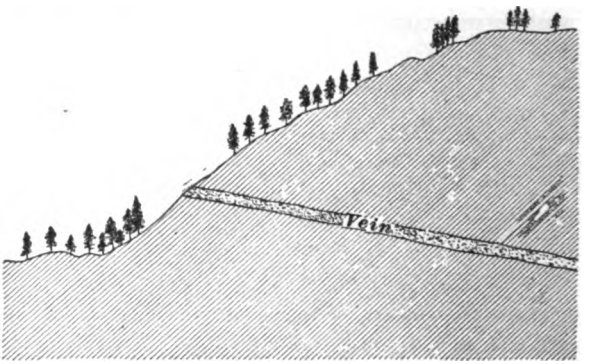

FIG. 51.

of an incline, through which the mine-cars were drawn out in trains.

156. Location of Stations.—When a skip is used in a flat slope, the station is placed on the back of the shaft, the lateral drifts are above the incline, which is placed in

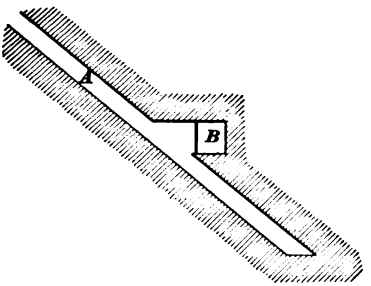

FIG. 52.

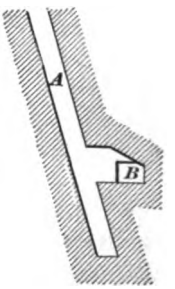

FIG. 53.

the foot-wall. In Fig. 52, *A* illustrates the incline and *B* the station into which the lateral drifts open. In the case of steep inclines, using either skips or cages, stations are

constructed as in the ordinary vertical shaft, as illustrated by Fig. 53.

157. Angle of Incline.—An incline of about 70 degrees from the horizontal, using skips, has certain advantages, as follows: In a shallow shaft (200 or 300 feet deep) the friction of the rope on the guide-rollers does not absorb much power, and as the weight of a skip is much less than that of a cage, together with a car having a capacity equal to the skip, it will be seen that skips hoisting out of balance have a decided advantage over cages hoisting out of balance; while, if working in balance, the total weight suspended on the ropes is less, and hence the strains on all the working parts are less when the skip is employed.

158. When a skip-road has an angle of more than 70 degrees from the horizontal, it may be necessary to use top rails or guides to keep the wheels on the track. With flat inclines (from 25 degrees down to 5 degrees from the horizontal) the ordinary mine-cars may be drawn out in trains. This gives a great tonnage to a comparatively small opening, the principle being the same as in hoisting with multiple deck cages; that is, it is more economical to move a great load at a slow speed than to move a small load at a great speed.

159. Switches.—When cars are used, they may be run into the lateral openings by switches from the main line. This applies, of course, to low pitches where the ordinary mine-cars are brought to the surface, and will necessitate the making of the lateral drifts on one side rather than above the main opening or incline.

160. Trap-Doors or Drawbridges.—If the grade of the incline is too great for the convenient removal of the cars by means of switches, they may be transferred from station to incline by means of a trap-door or drawbridge, which can be lowered into position or hoisted out of the way by means of pulleys.

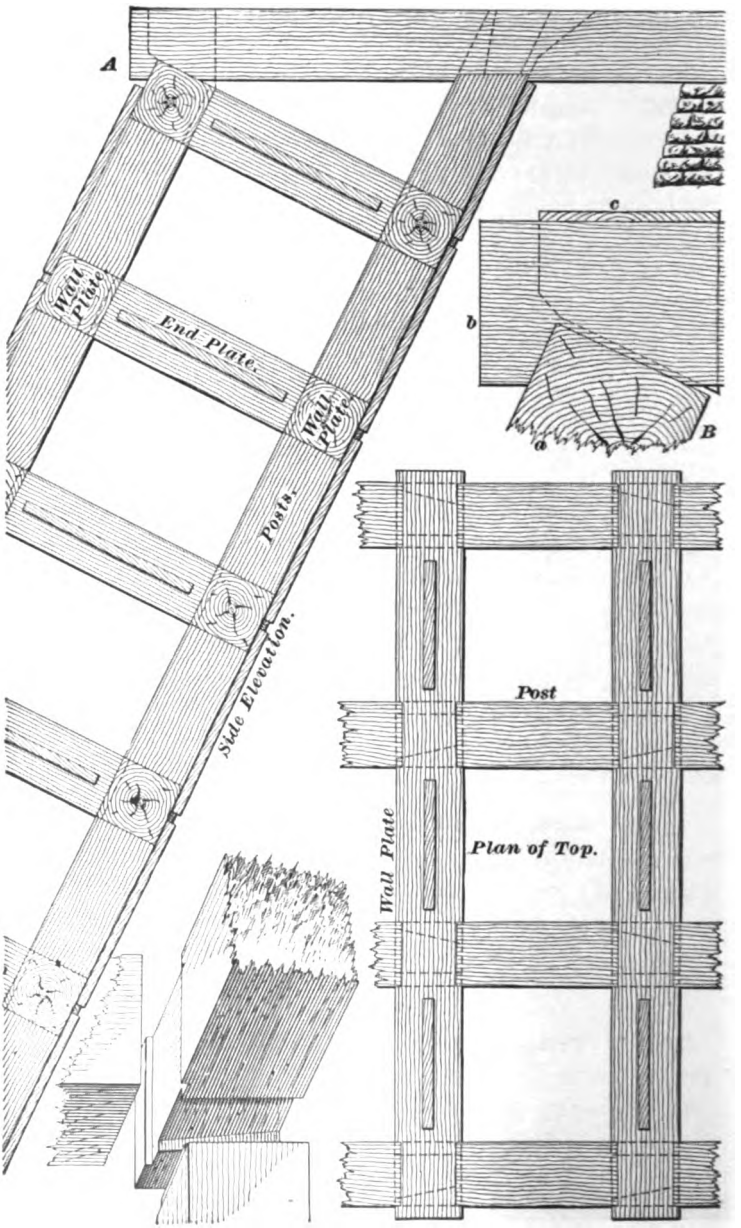
A
Wall Plate
End Plate.
Wall Plate
Posts.
Side Elevation.
c
b
a
B
Post
Wall Plate
Plan of Top.

FIG. 54.

TIMBERING FOR INCLINES.

161. Relation Between Angle of Incline and Style of Timbering.—The style of timbering employed in inclines depends principally upon the angle of inclination, steep inclines being timbered like shafts and flat inclines like tunnels. Inclines when steep are sometimes cribbed, but they are usually timbered with some form of square sets. The sets are often placed at right angles to the hanging wall, but it is better practice to give the end-plates a slightly greater angle than the perpendicular to the walls, the advantage being that any downward movement of the hanging wall will tighten the end-plates and so resist further tendency to motion in this direction. On the other hand, if the end-plates were perpendicular to the vein, the tendency for their upper ends to move downwards would cause them to leave the roof and so weaken the shaft timbering, thus leading to its destruction sooner or later.

162. Steep Inclines.—Fig. 54 illustrates a form of timbering suited to steep inclines. It will be seen that the joints and methods of securing the planking or lagging are similar to those used in the ordinary square sets for vertical shafts. The joint A is shown enlarged at B, a being the wall-plate, b the stringer or sill at the top of the shaft, and c the cap on the wall-plate.

163. Flat Inclines.—Flat inclines are timbered like tunnels. The posts are the timbers extending from one wall of the vein to the other, and all the timbers are named and framed as in the case of tunnel sets, the only difference being that sometimes the posts are given a slightly greater angle than the perpendicular to the pitch of the vein. One distinction between the timbering of an incline and the timbering of a tunnel is that in the case of an incline, sprags, or foot and collar braces, are always required.

SPECIAL METHODS OF SHAFT SINKING.

164. The following table illustrates the relative adaptability of the various special methods of shaft sinking and the materials for which they are best adapted:

Quicksand.	"Forepoling."
	"Metal Linings." (Forced down without the use of compressed air.)
	"Pneumatic" Method. (Limited to about 100 feet in depth.)
	"Poetsch" Process. (Freezing Method.)
Rock (hard or soft, but very wet).	"Kind-Chaudron" Method.
Rock (hard or soft, but not very wet).	"Continuous" or "Long-Hole" Method.

FOREPOLING.

165. Forepoling is really a modification of one of the ordinary forms of shaft timbering, and has been described. (See Arts. **77, 78,** and **112.**)

166. While forepoling may be well adapted for sinking through moderately bad ground, there are some cases in which it is very much better to adopt one of the special methods.

167. Objections.—The objections to forepoling are:

1. In the case of particularly bad ground (in which it is necessary to use breast-boards), the progress made by this method is very slow.

2. After the shaft has been put down by forepoling, it is sometimes difficult to replace or repair the lining.

3. When the forepoling method is used in quicksand, there is considerable risk of losing the shaft altogether.

METAL LININGS FORCED DOWN.

168. Manner of Doing the Work. — When metal linings are forced down without the use of compressed air, the work may be accomplished in one of two ways:

1. Where the ground is soft and contains but few boulders, the linings are sometimes forced to bed-rock and the material afterwards excavated or flushed out by means of water. Sometimes a portion of the material is flushed out while the linings are being forced down, or the material may be pumped out by means of a sand-pump or sludger. In these cases the shaft is full of water until the work is completed.

2. Men may enter the shaft and excavate the material as the work progresses, the lining being forced down as fast as they make room for it.

PNEUMATIC METHOD OF SHAFT SINKING.

169. General.—This method, which is used for both shafts and tunnels, maintains a pressure of air within the opening where excavating is going on sufficient to expel the water, and is the outgrowth of the method of putting down foundations for bridge piers by means of the pneumatic caisson. Shafts have been put down by using a caisson similar to that employed in bridge work, the roof of the caisson being removed after the lining had been completed down to bed-rock and the hoisting shaft passing right through the original caisson.

170. Example of a Pneumatic Caisson.—Fig. 55 is an illustration showing the lower part of the shaft timbering and the caisson as used while sinking. The left-hand portion of the illustration *a* shows the outside of one end of the caisson and illustrates a position of the plank sheathing; the right-hand portion of the illustration *b* is a section and shows the air-shaft, or main shaft *g*, the roof of the caisson *c*, and the heavy timber braces *e*, which are placed across the caisson to keep the edges in place. The caisson is the chamber *f* at the bottom of the shaft in

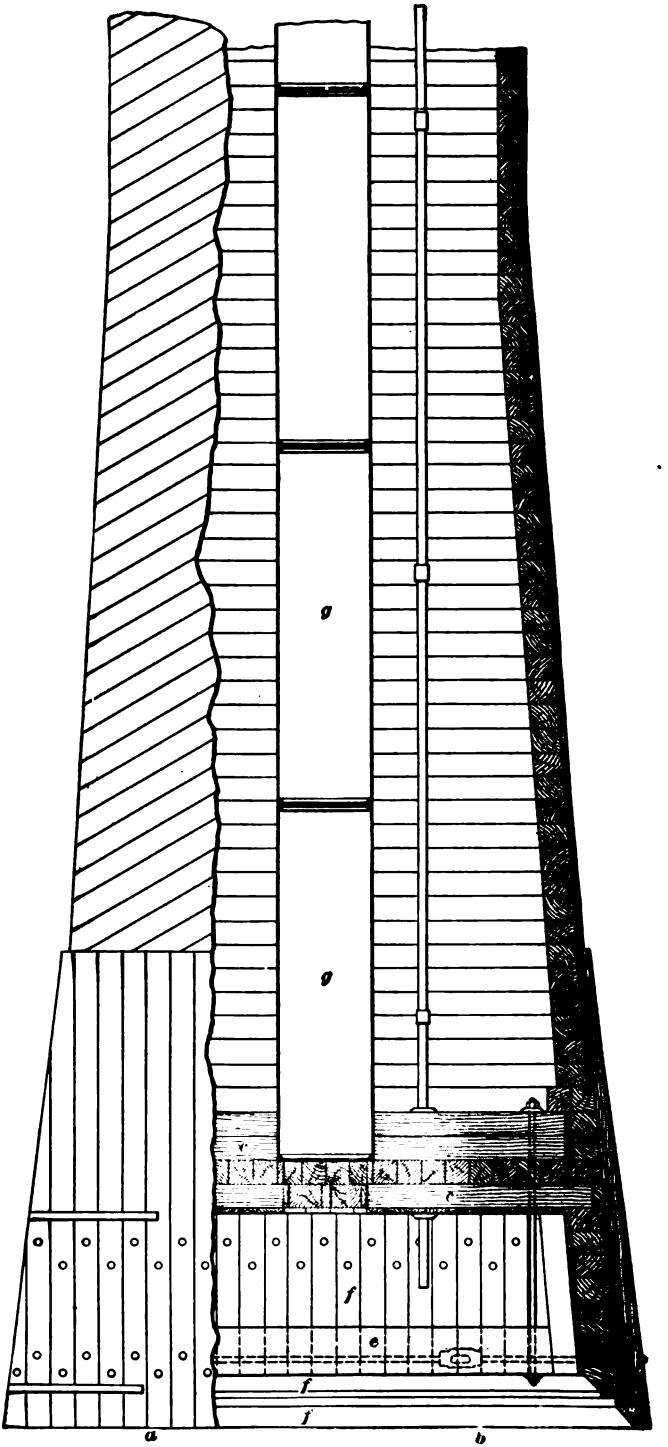

FIG. 55.

which the men work, and it is kept free from water by the air-pressure. The roof of the caisson *c* in this case is constructed of four layers of 12″ × 12″ timbers laid in tar, pitch, or cement. Inside of the roof there is a 3-inch plank lining, and all the joints are rendered air and water tight by calking. A shaft or tube 4 feet in diameter is carried up through the center of the shaft, as shown at *g* in the illustration, and the air-lock is attached to and forms a part of the top of this shaft, pressure tube, air-shaft, or main shaft, as it is called. Two 4-inch pipes are carried to the caisson chamber, one for supplying fresh air and the other for conveying the excavated material out of the shaft. The shaft is sunk to the water-level without the use of compressed air, after which the caisson is put in place and the shaft lining (which is composed of cribbing) is commenced on the top of the caisson and carried up as the work progresses. The entire structure, lining and all, sinks with the caisson. A sufficient pressure of air is introduced into the caisson chamber to keep back the water, and men enter it through the air-shaft *g*, Fig. 55, which is provided with an air-lock at its upper extremity.

171. General Consideration of Air-Lock.—The air-lock consists essentially of a chamber having two doors, both opening towards the caisson. As a man comes to it from the outside, the outer door is open, and he enters the chamber. After closing this door, he allows the compressed air from below to enter the chamber through a pipe and valve, and when the air in the chamber has reached the same pressure as that in the tube, the door leading to the tube is opened and he descends to his work by means of a ladder through the tube and into the caisson.

172. Position of Air-Lock.—The position of the air-lock in regard to the caisson chamber is a point that has been discussed a great deal. If it is placed at the bottom of the air-shaft, the men do not have to climb the ladders under air-pressure, and thus save a great deal of very fatiguing work. On the other hand, if a sudden inrush of water

occurs through a break in the side of the caisson or in the air-pipes, it may be impossible for the men to escape through the air-lock before the caisson is filled with water, and in such a case they would be drowned in the caisson chamber. If the air-lock is at the top of the air-shaft, the men can escape into the air-shaft, and thus be safe from the rising water. Some parties have compromised the matter by placing the air-lock in the shaft at a point about half way between the caisson and the top of the work when finished.

173. In the caisson illustrated in Fig. 55, the air-lock is placed at the top of the air-shaft and forms a part of the same; an illustration of the air-lock drawn to a larger scale is given in Fig. 57.

174. Removal of Excavated Material.—Originally the material excavated from the caisson had to be hoisted through the air-shaft and stored in the air-lock until this was filled; then the lower door connecting with the caisson was closed, the outer door opened, and the material discharged.

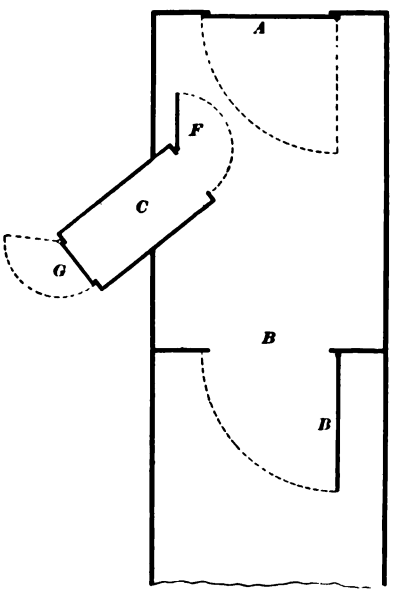

FIG. 56.

175. Auxiliary Air-Lock.—This method was extremely expensive and led to the invention of an auxiliary air-lock on the side of the main lock, into which the material could be placed. When this lock was filled, it was discharged without affecting the pressure on the main lock. This was accomplished by having the doors at the two ends of the auxiliary lock so constructed that they could not both be opened at the same time, and after the

material had been placed in the lock, the inner door was closed and the outer one opened. The general principle of this is illustrated by Fig. 56, in which *B* represents the door leading from the main air-lock into the air-shaft; *A* the door leading from the atmosphere into the main air-lock; *F* and *G* the two doors of the auxiliary air-lock. When in use, the door *A* is closed, the door *B* open, the door *F* open, and the door *G* closed. Material is hoisted into the air-lock and dumped into the auxiliary lock *C*. When the auxiliary lock is full, the door *F* is closed, the door *G* opened, and the material slides out of itself. This device greatly cheapened the pneumatic method of sinking, but it entailed a great amount of labor in the hoisting of the material into the lock.

176. Aspirator.—The next improvement consisted in the invention of an aspirator, by means of which the fine material could be blown or aspirated out of the caisson. This consisted in mixing the sand and gravel with some water and feeding it to the mouth of a pipe connected with the atmosphere. The pressure of air in the caisson would drive a stream of material composed of water, air, and sand, out through the pipe. By this means the material can be easily removed.

177. Boulders.—If only a few boulders are encountered during the sinking, they are carried down in the caisson, and, if the opening is a shaft, are removed and hoisted out after the roof of the caisson has been cut away. If there are a large number of boulders present, it will be necessary to blast them and hoist the pieces out through the air-lock.

178. Shaft Lining.—The shaft lining as built on the top of the caisson in the illustration is composed of timber and built up as cribbing. The outside of the lining was covered with 3-inch plank lagging placed diagonally, as illustrated on the left of Fig. 55.

179. Example of Air-Lock.—Fig. 57 illustrates the air-lock as used in connection with the shaft illustrated in Fig. 55. The air-shaft is 4 feet in diameter on the inside

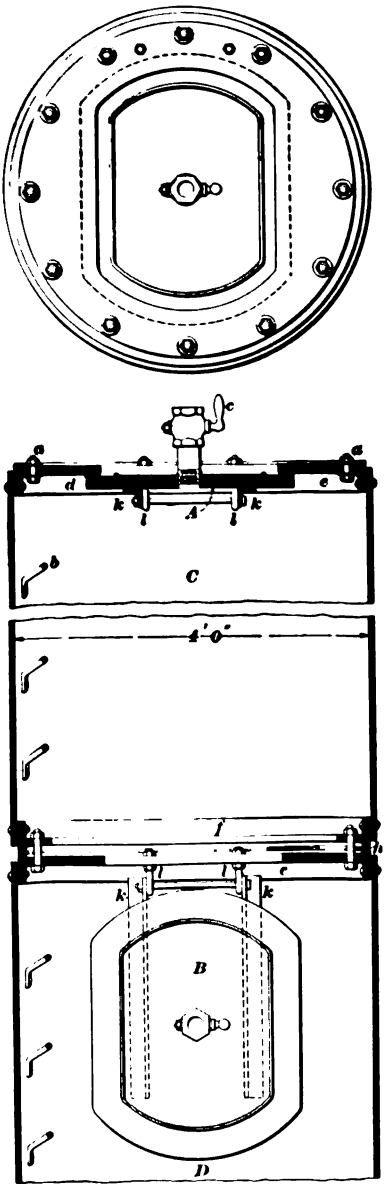

FIG. 57.

and is made of ¼-inch steel plates. The flanges to which the plates are riveted are cast iron, and also form the joints for the air-lock; the upper section of the shaft at any particular time being employed as the lock, or, if it is desired, the doors can be placed on any lower section and it used as the air-lock. The action of the lock can be explained as follows :

180. As shown in the illustration, the door *B*, leading from the air-shaft *D* into the lock *C*, is open. The upper flange of each section of the air-shaft is provided with an oval opening to which the doors are fitted. The doors are made of cast iron and have hinges made of angle-irons, as at *k*, and hung on I bolts, as shown at *l*. A ½-inch rubber gasket is used to make the joint between the door and the flange, as shown at *d*. Each door has a plug-cock or valve placed in it, through which the air-pressure can be relieved, and frequently there are two such valves, one of which can be operated from each side of the door. The joint *h*

between the two flanges *f* and *e* is planed true, and an air-tight joint made with the aid of packing. The two flanges *f* and *e* are bolted together, as shown in the illustration. When the upper section of the tube is used as an air-lock, the holes intended for bolting the flanges together must be plugged by means of short bolts and gaskets, as shown at *a*. *c* is one of the plug-cocks in the door through which the air can be blown off. If the man wishes to go out, he passes through the door *B* into the chamber *C* and closes the door behind him. Then, by opening a valve in the door *A*, he reduces the pressure in the air-lock to that of the atmosphere, after which the door *A* can be opened, and he can pass out without any trouble. Sometimes the door *A* is fastened from the outside, and the men in the lock have to give a signal to the attendant outside, who unfastens the door and opens the air-cock *c*.

181. Weight or Power to Force Caisson Down.— In order to force the caisson down against the air-pressure, it is necessary to weight the entire structure. This may be accomplished by filling the space between the air-shaft and the cribbing with sand and stones, or, better still, by introducing some scrap-iron, such as old railroad rails. If the weight thus supplied does not furnish sufficient pressure, it may be necessary to use screws or hydraulic rams to force the structure down.

182. Blowing.— Usually the filling or weighting of the inside of the shaft is sufficient, but in case the shaft lining tends to stick, it may be started by excavating the material from under the caisson and then reducing the air-pressure a few pounds. This is called blowing.

183. Tapered Form.— This will usually cause the structure to settle as desired. By giving the structure a tapered form, as shown in Fig. 55, the tendency for it to stick in the earth is greatly reduced.

184. Water-Tight Joint.— When the caisson has reached bed-rock, a water-tight joint may be formed as

shown in Fig. 58. Sufficient rock is excavated to furnish a bearing all around for the caisson shoe. Then a puddling of clay *k* is forced under the bottom of the caisson against the quicksand *l*. Next, a grout *h*, composed of Portland cement and gravel, is built against this puddling of clay and allowed to set before the air-pressure is removed. Before the air

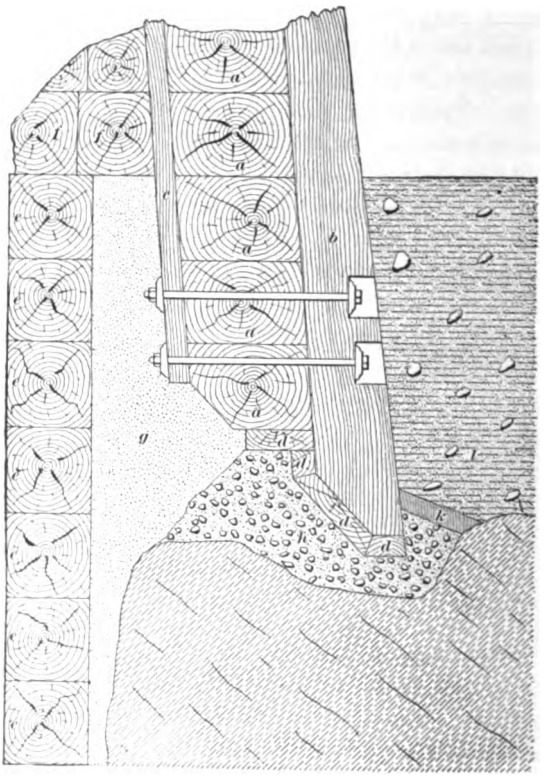

FIG. 58.

pressure is taken off from the caisson, but after the joint under the caisson shoe has been made by means of the grout at *h*, the rock is excavated for some distance and the cribbing *c*, *c* built up as in the ordinary shaft. The space between the cribbing and the rock, or the cribbing and the caisson, is filled with Portland-cement mortar, as shown at *g*. The

cribbing is built some distance into the caisson and joined to the caisson, as shown at *f*, *f*. After this has been accomplished, the air-pressure may be taken off, the roof of the caisson sawed out, and the cribbing continued up as in an ordinary shaft. In Fig. 58, *a*, *b*, *c*, and *d* are timbers of the original caisson, *d* being the hardwood caisson planks which form the caisson shoe.

185. Form and Depth of Shaft.—Shafts sunk by the pneumatic process may be either circular or rectangular, and may be lined with wood or metal. The pneumatic process is limited to a depth of about 100 feet below the water-level, as it has been found impossible for men to work when exposed to a much greater air-pressure than that necessary to resist this head of water.

186. Tunneling.—When the pneumatic process is applied to tunneling, the caisson is replaced by a pilot tube or pilot shoe. This work has been carried on very successfully in a number of cases, but the pilot shoe is more difficult to control, and owing to the fact that there is a considerable difference of elevation between the top and bottom of the tunnel, it is not always easy to keep the water out by pneumatic pressure. There have been a number of very serious accidents, which have cost many lives, while trying to drive tunnels by this method.

THE POETSCH OR FREEZING METHOD.

PRINCIPLES OF FREEZING.

187. Conversion of Gas to a Liquid.—Before describing the freezing process, it may be well to consider the manner in which heat can be extracted from various objects so as to freeze them. To convert any liquid to a gas or vapor, as, for instance, to convert water to steam, requires the application of considerable heat, and the greater part of this heat becomes latent; that is, it is expended in separating the particles of the liquid and does not appear as heat, or does not raise the temperature of the steam above that of

the water. That is, if the liquid is converted to a vapor or gas without raising its pressure, all the heat necessary to cause the change of state from that of a liquid to a gas is absorbed and does not raise the temperature of the resulting gas. This heat is called latent heat. On the other hand, when any gas or vapor, as, for instance, steam, is reduced to a liquid, the heat given to it in the previous case is again liberated. This same principle is true of all gases, and each gas has a particular pressure at which it becomes a liquid for any given temperature. For instance, water at the ordinary pressure of the atmosphere is a liquid at all points up to 212° F., and at this point it becomes a vapor. As the pressure increases, the point at which water becomes a vapor or gas rises.

188. Ammonia Gas.—Ammonia gas is not a liquid at any ordinary temperature or pressure, but at a temperature of 50° F. it becomes a liquid under a pressure of a little over 90 pounds per square inch above the atmosphere, but when the gas is compressed and converted into a liquid, the heat contained in it must be taken up by some outside substance, as, for instance, cold water. After the gas has been reduced to a liquid, it will remain in this condition as long as the temperature does not rise above 50° F., or the pressure fall below a little over 90 pounds per square inch above the atmosphere. If the pressure is reduced, a portion of the liquid will expand and become a gas, thus raising the pressure again, but in so doing the temperature falls and heat must be extracted from the surrounding bodies in order to maintain the gas in that state.

189. Freezing by Means of Gas.—The principle of freezing by means of ammonia is simply as follows: Ammonia gas is compressed to a liquid, and the heat developed is absorbed by some fluid. The liquid gas is then allowed to expand, and in so doing it cools the surrounding objects. The surrounding objects may be brine or quicksand (the gas being allowed to expand in the freezing tubes in the soil), or the gas may be allowed to expand in pipes

immersed in a brine solution, this brine solution being used for a freezing solution after its temperature has been sufficiently reduced. In order to return the expanded gas to a compressor, it is usually pumped by means of a gas pump, which actually produces a vacuum in the tubes in which the gas expands from a liquid to a vapor.

APPLICATION OF FREEZING PRINCIPLES TO SHAFT SINKING.

190. Original Process. — As originally invented, this process consisted in the sinking of a number of tubes through the quicksand or other formation to be frozen, and then by maintaining the circulation of a freezing mixture in the tubes, the entire mass of material surrounding them was frozen solid, after which the excavation could proceed as though the formation were solid rock.

191. Divisions. — There are now two distinct divisions of the method, which may be considered as follows;

1. That which uses a freezing solution.

2. The modification brought out by M. Gobert, and in which the ammonia itself is used in the tubes.

192. Use of Freezing Solution.—In the first case, the tubes are subjected to a considerable pressure, on account of the fact that the calcium chloride solution, used as a freezing mixture, is much heavier than water. Now, if the tubes should leak and any of this solution be allowed to flow into the ground, it would form an uncongealable mixture, thus interfering with, if not defeating, the operation altogether. One advantage of the calcium chloride method is that the freezing solution is carried to the bottom of the tube in its coldest condition and rises from there, and on this account the frozen wall is thickest at the bottom, where the greatest pressure will come upon it during the subsequent sinking.

193. Use of Ammonia in Tubes. — In case the ammonia is used directly in the pipes, it is introduced at the

top of the inner tube as liquid ammonia. As the liquid ammonia descends, it expands into a gas, and in so doing absorbs heat from the surrounding objects. The ammonia gas resulting from the use of the ammonia is returned to the ice-machine or pump by means of a gas pump, which exhausts the gas from the tubes in which it expands, and this action results in a vacuum in these tubes. When the gas is used in the freezing tubes, as in M. Gobert's method, there will be a vacuum in these tubes, which is exactly the reverse of the conditions existing when a calcium chloride solution is used. One advantage of this condition is that should the tubes leak, the water would tend to enter them, and would immediately become frozen, thus stopping any further tendency towards leakage.

194. When the ammonia is introduced directly into the tube, the freezing begins near the surface and proceeds downwards. The advantage of this is that the upper portion of the shaft is soon in a condition to begin work upon. The disadvantage is that the wall of frozen material about the shaft will be thinnest at the bottom, where the pressure of the water in the formation is the greatest, and if the work of sinking is pushed too rapidly the bottom of the shaft may not be thoroughly frozen, which would result in serious leaks, if not in a complete loss of the shaft.

195. Owing to the fact that a greater degree of cold can be obtained by using the ammonia in the freezing tubes, the work can be pushed more rapidly when this process is employed, and on account of the fact that sinking may be commenced sooner than in the first case, this method seems to present many advantages.

196. Uses of Freezing Process. — The freezing process has two principal uses:

1. As a means of constructing a shaft through a bed of quicksand, either near the surface or at a great depth between rock formations.

2. In the case of rock formations where the flow of water would be excessive, the water, rock, and all may

be frozen and the sinking progress without the need of pumping.

197. Method of Placing Tubes.—The tubes are put down into the ground in a variety of ways, depending upon the conditions. If the material to be penetrated consists of quicksand or fine gravel, a 10 or 12 inch casing may be driven to bed-rock by means of an ordinary pile-driver. The material within the casing is then flushed out with a stream of water, a drill introduced, and an 8 or 10 inch hole drilled for several feet into bed-rock. After this, ordinary 5 or 6 inch well casings, having plugs welded into their lower ends, may be lowered inside of the outer casings and have their lower ends placed in the holes drilled in the rock. The casings first driven should now be removed, for if this is not done the water between them and the inner well casings, upon freezing, will crush the thinner pipes, so causing leaks. By this means, thin casings can be placed in the ground without danger of breaking or buckling them.

198. Where the formation is rock, holes are simply drilled to the desired depth, and the 5 or 6 inch tubes are introduced without the necessity of driving down the larger ones. Sometimes when the calcium chloride solution is to be used, the outer casings, which are the first put down, are flushed out and then their bottoms stopped by means of a lead plug covered with alternate layers of pitch and cement. The weight of the solution coming upon this plug tends to force it down, and by making the last foot or so of the pipe taper on the inside, this action can be made to tighten the plug.

199. Connections of Tubes and Method of Circulation.—After the 5 or 6 inch casings are in place, a small pipe (from 1½ to 2 inches in diameter, when the freezing solution is used) is passed down the inside, so that its lower end almost reaches the bottom of the 5 or 6 inch casing. This inner tube is provided with a slot near its lower extremity, and is connected at the upper end with the

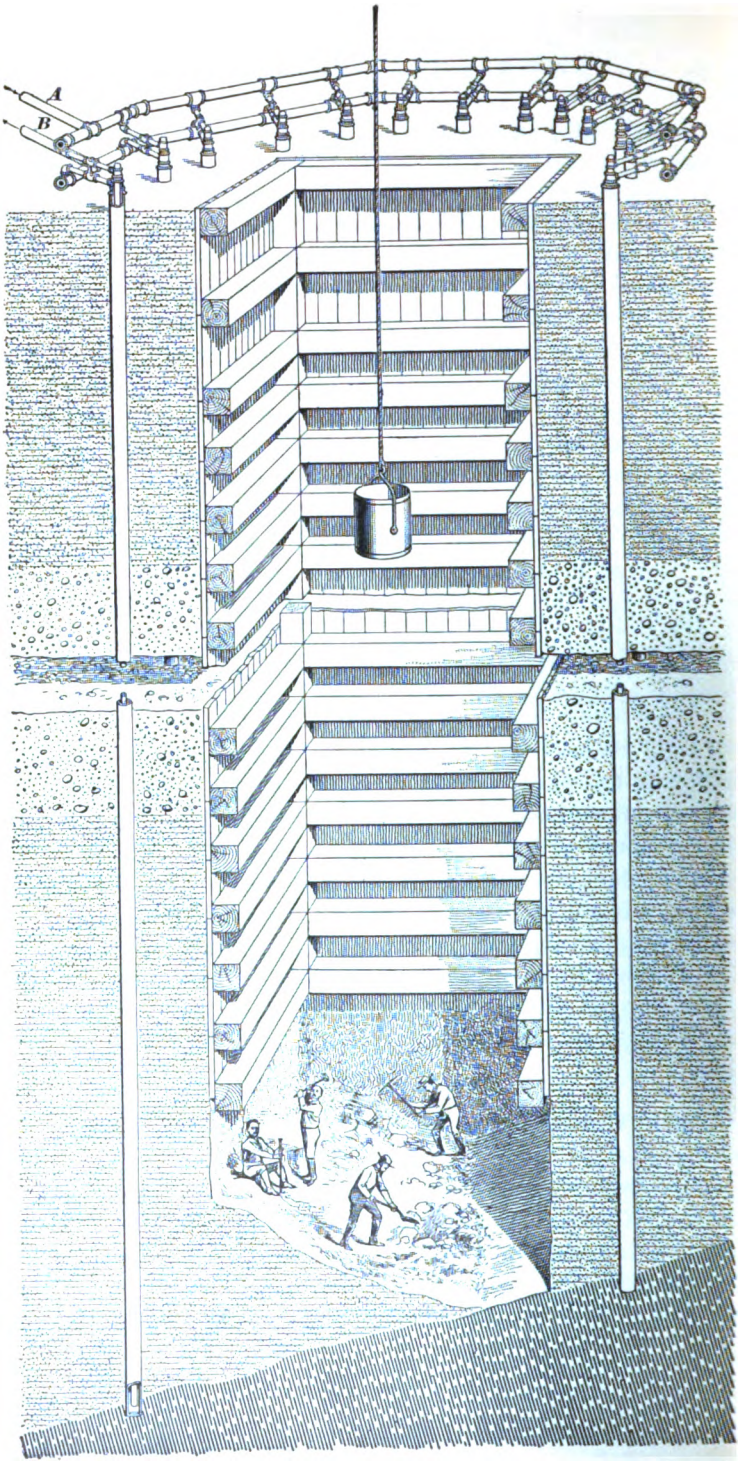

FIG. 50.

solution main from the refrigerating cistern, or with the liquid-ammonia pipe, depending upon the system in use.

200. Where the ammonia is used in the freezing pipes, the inner tube is sometimes composed of copper, and is provided with several slots at different points between the top and bottom of the freezing tubes.

201. When the freezing solution is used in the freezing tubes, the inner tube is usually composed of iron pipe, and has slots near the bottom only.

202. Example of Freezing Process. — Fig. 59 illustrates the method used in sinking a shaft by the Poetsch freezing process at Iron Mountain, Michigan. The freezing solution was a concentrated *chloride* of calcium solution, and it was cooled to about 0° F. by means of an ice-machine.

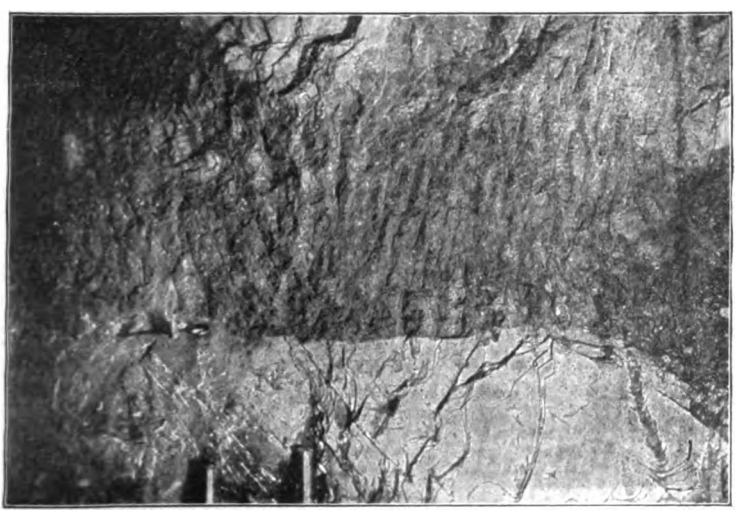

FIG. 60.

The solution entered the upper pipe at *A* and passed down through the several inner tubes, up through the outer casings and out at *B*, as indicated by the arrows. The ground was frozen solid to the center of the shaft and for a distance of about 13 feet outside of the tubes near the bottom.

Twenty-six freezing tubes were used, and they enclosed a circle 29 feet in diameter, the tubes averaging 3 feet 6 inches center to center. The frozen quicksand resembled a compact sandstone, and had to be excavated as though it were rock. The excavation and the timbering were carried on inside of the pipes, the shaft-lining being supported from above until the work was completed. Fig. 60 is a view made from a photograph, showing the junction of the frozen quicksand and the rock ledge. This photograph was taken 90 feet below the surface.

203. Depth of Shafts.—Shafts have been put down to nearly 300 feet in France by this method, and in some cases the process has proved itself by far the cheapest and quickest method available.

204. No Pump or Pumping.—The pumping of water from the shaft during the sinking is entirely avoided, and the money saved in this way can go towards defraying the cost of freezing the ground.

The workmen are not hindered by having a sinking pump in their way, as would be the case were there water to be handled.

205. Amount Frozen.—In some instances the pipes have been driven well outside of the intended shaft area, the intention being to simply freeze a wall of earth entirely around the shaft. If this can be accomplished, the central portion of the earth can be removed before it is frozen, but in most cases the ground has to be frozen solid and then blasted as though it were rock.

206. Temperature of Tubes in Ground.—When ammonia is used in the freezing tubes, a temperature of — 22° F. can be obtained, while if the calcium chloride solution were employed, — 13° F. would be about the best that could be obtained. In actual practice, the temperature of the brine solution in the tubes is not much, if any, below 0° F., from which it will be seen that the possible limit of — 13° F. is never reached in the ground. This is largely due

to the pipe connections and to the fact that the solution returning to the machine can not be very much above that descending through the inner tube. It is probable that where the ammonia is used in the freezing tubes there is also a rise of temperature to something above — 22° F., owing to the pipe connections, etc., but, nevertheless, by the use of the ammonia in the tubes a lower temperature can be obtained than when the brine solution is employed. From this it will be seen that where the ammonia is introduced in the freezing tubes, the freezing can be accomplished in a shorter time.

207. Beds of Quicksand Between Rock Formations.—Sometimes during the process of shaft sinking, beds of quicksand are encountered between the rock formations at some distance from the surface. A shaft may be carried through such troublesome formations with the aid of the freezing process. The method of introducing the pipes depends upon the character of the bed of quicksand and upon the amount of water present in the formation. When water rises from the quicksand under great pressure, it will probably be necessary to return to the surface and drill holes surrounding the shaft, the freezing tubes being introduced into these holes. The portion of the freezing tubes above the formation to be frozen can be insulated with some covering material, thus confining the freezing to the desired portion of the shaft. When this process has to be resorted to, the shaft is allowed to fill with water, and no pumping is done while the quicksand is being frozen. Were water to be pumped from the shaft during the freezing, it might cause currents to flow through the quicksand, and so interfere seriously with the process of freezing.

208. At times the quicksand bed is practically above the drainage level of the district; that is, any water in the troublesome formation has no tendency to rise into the shaft. Under such circumstances, tubes can be forced down from the bottom of the shaft. It is the usual practice to enlarge the shaft at this point and to force the tubes

down at a slight angle. (In one case where a body of quicksand 60 feet thick was encountered, the shaft was enlarged 2 or 3 feet on a side and tubes forced down at a slight angle, so that the lower ends of the tubes were from 3 to 4 feet farther from the shaft lining than the upper ends. After the tubes were in place, the body of quicksand was frozen without any trouble.) If water flows down the shaft from the rock formation above, it may be trapped into a sump above the quicksand and pumped out during the freezing process, but, as mentioned before, no water coming from the bed of quicksand should be pumped during the freezing.

209. Position of Tubes.—As a rule, tubes are never sunk inside of the area to be excavated. In some cases the tubes have been put down at an angle from the bottom of the shaft, as already described, and connected with pipes leading to the surface. These pipes were then insulated and the shafts allowed to fill with water, the freezing being carried on from the surface and no pumping being done during the process. The insulating material about the pipes would keep the water in the shaft from being frozen.

THE KIND-CHAUDRON SYSTEM.

210. Excavation of Part of Shaft Above Water-Level.—This system is applicable only to circular shafts, and is undoubtedly the best where heavy feeders of water must be contended with, which would render work in the bottom of the shaft impossible. Ordinarily the shaft is carried to the water-level by ordinary sinking methods, and lined.

211. Process of Excavation.—The excavation is effected in two successive operations. At first a cylindrical hole of between 4 and 5 feet in diameter is bored. This is usually called the guide-bore pit, and is kept at least 35 feet in advance of the full-sized portion of the shaft. The guide-bore pit is enlarged to the full size by a second or third operation. The manner of cutting the excavation is the

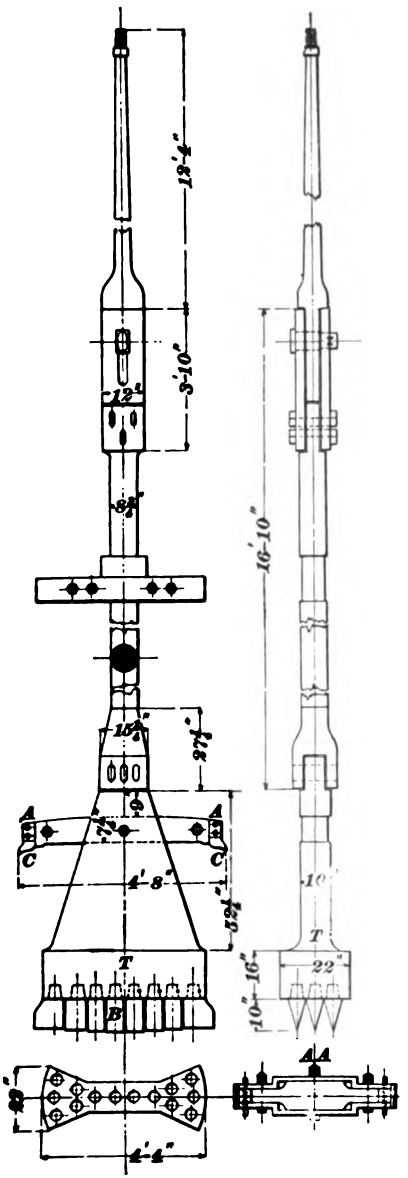

FIG. 61.

same in each operation, but the removal of the debris is accomplished differently in the different stages. In each case the cutting-tool *T*, *T*, Fig. 61, called a trepan, consists essentially of a horizontal bar of wrought iron, to the under surface of which are attached steel teeth, so placed that as the bar is rotated around the central axis of the shaft, each tooth, in falling with the bar through the requisite length of the stroke, generally from 10 to 20 inches, cuts for itself an annular portion of the bottom of the shaft.

212. Rods.—The trepans, both large and small (which, of course, work at different times), are operated by the same rods, which are made of pine, and may be about 8 inches square. The individual rods are usually 60 feet in length and are connected by a screw-joint. The elasticity of the wood and its buoyancy in the water give them a great advantage over iron rods.

213. Operation of Rods.—The rods are operated by a lever, walking-beam, or bob similar to that used in handling the rope or rods in the ordinary American Well-Boring Outfit (Arts. **53** and **59,** *Percussive and Rotary Boring*). The rods are connected to the bob by a strong chain and swivel. Sometimes a flat hemp rope is used in connecting the swivel to the end of the bob. The bob may be operated by a crank and pitman, or by a single-acting steam-cylinder attached directly to one end of the bob. At a point somewhat above the water-level a platform is arranged, and on this four men stand to operate the levers or cross-bars, by means of which the boring-bit or trepan is rotated. In operating the trepan, the workmen turn it continually in one direction, and never release the turning bars, either while the rods are ascending or descending, for if the rods were released their natural spring would turn the trepan back again, which would result in uneven cutting.

214. Small Trepan.—The small trepan shown in Fig. 61 is differently constructed, according to the nature of the ground it is intended to cut. When intended for cutting soft material, the bar in which the teeth are attached is suspended by a fork of wrought iron, but where hard rock is to be cut, the bar is forged in a single piece and weighs from 18,000 to 22,500 pounds. The steel teeth fit into sockets in the main bar, and are additionally secured by pins, which are readily drawn out when the teeth must be sharpened or renewed. The tool shown in Fig. 61 is capable of advancing 8 feet per day in ordinary ground. The arm *A A* is for the purpose of steadying the motion of the tool, and is slightly longer than the lower cutting edge. The teeth *C*, *C* on the ends of the arm *A A* widen the hole slightly in addition to guiding the tool. When the small trepan has been used for some hours, usually at the rate of 9 to 10 strokes per minute (though sometimes at 20 strokes per minute), it is raised by a small hoisting-engine, the rods being successively unscrewed and placed at one side.

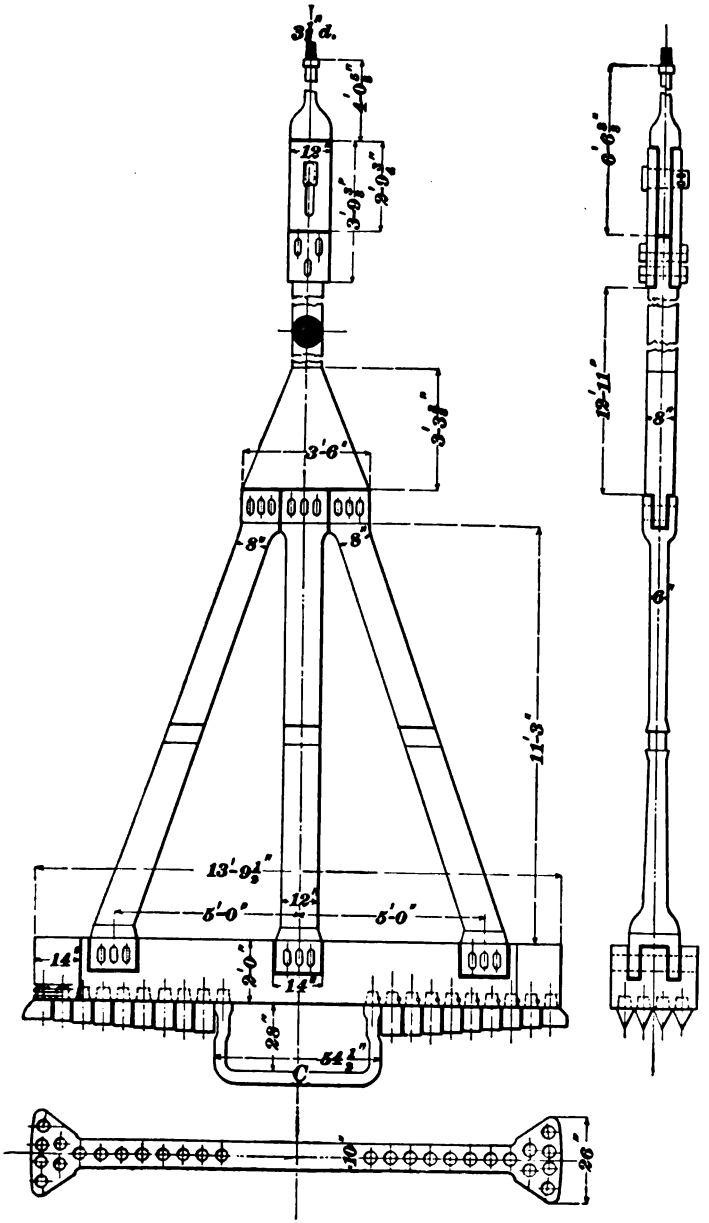
3½ d.
4'-0½"
12"
3'-0½"
3'-0½"
3'-3½"
3'-6"
8"
8"
11'-3"
13'-9½"
5'-0"
5'-0"
12"
14"
2'-0"
14"
26"
54½"
C
20"
26"
0'-0½"
12'-11"
6"

FIG. 62.

215. Removal of Debris.—The debris in the hole is then removed by means of a sheet-iron bucket provided with trap-valves in its bottom. This is similar to the sand-pump used in connection with the ordinary American Well-Boring Rig. (See Art. **62,** Paper on *Percussive and Rotary Boring.*) This bucket is called a sludger or sand-pump, and is raised and dropped until it has become full of material, which has passed in through the trap-doors or trap-valves; the bucket is then raised and emptied. By repeating this operation once or twice, the hole is thoroughly cleaned before drilling is resumed.

216. Large Trepan.—The larger cutter, or trepan, Fig. 62, usually weighs from 36,000 to 50,000 pounds, and is formed of a wrought-iron bar having teeth attached to that portion of its length which exceeds the diameter of the guide-bore pit. It is guided by means of a cradle or iron bar *C*, which fits closely within the smaller excavation. When using the large trepan, a sheet-iron bucket is first lowered to the bottom of the guide-bore pit. The teeth on the large trepan are so set that they always cut the bottom of the annular portion surrounding the guide-bore pit into a sloping surface, so as to allow the fragments and cuttings to roll into the smaller shaft, where they are caught in the bucket previously mentioned. Sometimes scrapers are provided, which drag around after the trepan and sweep the material down the incline and into the bucket. When sufficient drilling has been done to fill the sheet-iron bucket, the trepan is raised and the bucket fished out and hoisted. In this way the trouble of working the sand-pump or sludger up and down is avoided.

217. Sliding Piece.—In order to avoid the tremendous vibration which would be imparted to the rods by tools of this great weight, a special arrangement is necessary that will allow the heavy cutting-tools to fall free of the rods. This is accomplished by means of a sliding piece similar to the jars used in the American Well-Boring Rig, the rods being simply used to lift the cutting-tool in order

that it may fall and do the cutting. The bob carries the rods down at a more rapid rate than they would fall through the first few inches, and hence this allows the free fall of the cutting-tool. Figs. 61 and 62 show the general dimensions of a set of tools used for boring a shaft 14 feet in diameter.

218. Tubbing or Lining.—After the boring is complete, the shaft stands full of water, and it becomes necessary to dam this water back into the strata before men can pass down through the shaft. To accomplish this, the shaft must be lined with cast-iron tubbing, which consists of consecutive rings or cylinders from 4½ feet to 5 feet in length. These rings are bolted together by means of flanges on the inside of the shaft, and the joints are made water-tight by planing them or turning them perfectly true, and then introducing red lead or sheet lead between the successive joints before the bolts are tightened. Fig. 63 illustrates a shaft with the tubbing suspended above the bottom of the shaft. The lower sections of the tubbing have to be thicker than the upper ones, owing to the fact that they are called upon to resist greater pressures. This thickness may be as much as from 2⅝ to 3 inches, and the succeeding rings towards the surface are made gradually lighter.

219. Lowering of the Tubbing.—In order to facilitate the lowering of this enormous weight by means of the rods and screws used for the purpose, a diaphragm or false bottom *F*, Fig. 63, is attached by screws or bolts near the bottom of the tubbing. This causes the tubbing to float on the water in the shaft; a central tube *G* passes up through the center of the shaft and is provided with stop-cocks at intervals, through which a portion of the water may be allowed to flow into the middle of the tubbing, so as to assist in the descent of the entire structure. In this way only a small portion of the weight is carried by the suspension rods. The central tube *G* is called the equilibrium tube.

220. Water-Tight Joint.—In order to make a water-tight joint at the bottom of the shaft, a device called the

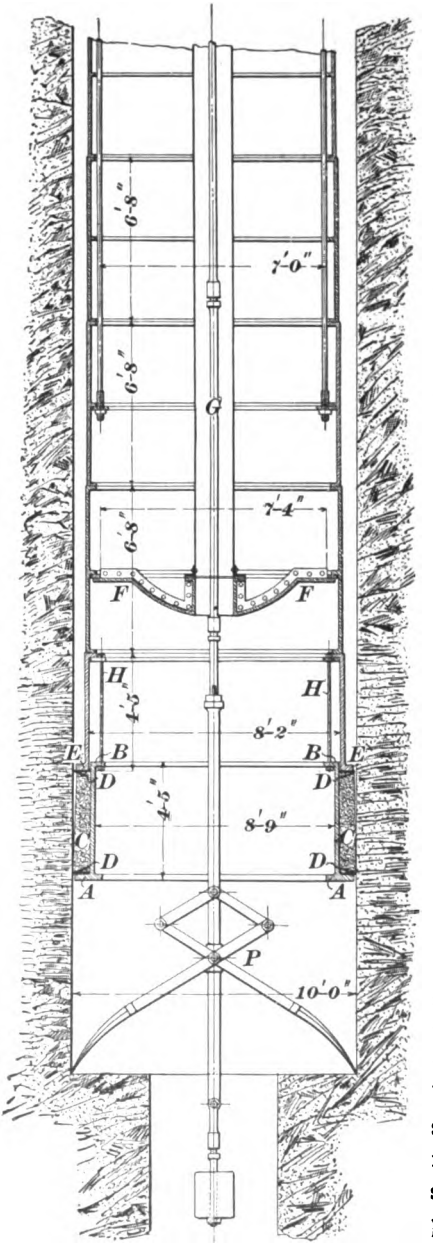

FIG. 63.

moss-box is employed. This is illustrated in Fig. 63. The lower flange of the tubbing *E* turns out in place of in, as do all the flanges above this point. Below this section is placed the section *A*, which is so constructed that it can slide inside of *E*. The section *A* is provided with a flange which turns out at the bottom. The space surrounding the section *A* is filled with packed moss, as illustrated at *C*; metal guides are placed at *D*, *D*, which are so shaped as to force the moss out against the rock when the section *E* is forced down over the section *A*.

221. During the descent of the tubbing, the section *A* is supported by the bolts *H*, and simply hangs free in the shaft. The annular portion of the shaft bottom surrounding the guide-bore pit having been cut square and true, as shown in Fig. 63, a large pair of scrapers, arranged like a pair of lazy-tongs, is lowered underneath the tub-

bing and connected by rods passing through the equilibrium tube. This pair of scrapers can be operated by rods in such a manner as to expand the blades or scrapers to the full diameter of the shaft, as shown in Fig. 63. Then, by drawing the points together, any pieces of rock or other material which have fallen upon the seat provided for the moss-box during the descent of the tubbing can be scraped into the guide-bore pit. By the use of this tool, the surface is cleaned just before the moss-box reaches the bottom of the shaft. After the scrapers have cleaned the bottom of the shaft, they can be folded up and passed out of the way into the guide-bore pit.

222. After the seat has been cleaned and the scrapers passed out of the way, the tubbing is allowed to settle on the moss-box and the enormous weight of the entire structure forces the portion *E* down over the portion *A*. This action in turn compresses the moss *C* and forces it against the sides of the hole, thus making a water-tight joint.

223. Cement Packing Behind Tubbing.—After this has been done, the annular space between the rock and the tubbing must be filled with cement or concrete. This is accomplished by means of specially designed boxes called "spoons." The concrete is placed in these boxes and lowered to the bottom before it is released from the spoon. If the concrete were poured down between the tubbing and the rock, only the gravel or coarse sand would reach the bottom, for the cement would be all washed out of the concrete during its descent.

224. Pumping Out and Opening of the Shaft.—After the entire space between the tubbing and the formation has been filled and time has been allowed for the cement to set, the water inside of the tubbing may be pumped out, the equilibrium tube *G* and the diaphragm *F F* removed, and the joint between the moss-box and the formation examined. If the joint is tight and the boring has proceeded some distance into firm rock, it may be unnecessary to put in another water-tight joint or curbing, but if there is any

danger of a leak occurring, it is customary to sink the shaft some distance farther, put in a wedge curbing or cribbing, and build up one or two sections of tubbing to the moss-box, the joint between the tubbing and the moss-box being carefully wedged. No blasting should be done in sinking the shaft until the work has progressed some distance below the moss-box. If the cement back of the tubbing has been well placed and the boring carried some distance in the good firm rock, no additional water-tight joint would be required, and from this point on in the shaft an ordinary shaft lining will be all that is necessary. Sometimes, where the rock formation is firm, circular shafts are not lined, as, for instance, when sinking through a firm close-grained sandstone, or through granite.

225. Advantages.—Some of the advantages of this method of operation may be stated as follows: (1) No pumping engine is required while sinking. (2) The fact that no water is removed during the process of drilling and sinking prevents the flow of currents of water, which have a tendency to wash quicksand or other material into the opening. (3) The water is made to assist in handling and lowering the great weight of the tubbing. (4) After the shaft has been sunk and the water dammed back, there is no trouble from the water in the formation above.

THE LIPPMAN SYSTEM.

226. This system of sinking shafts differs but little from the Kind-Chaudron method, the principal difference being that the cutting is done at one operation, the trepan being forked on both ends; that is, it has a Y shape on both ends, as illustrated in Fig. 64, *d* being the diameter of the cutting. The tools are made and hung in practically the same manner, and the cutting teeth are secured in a manner similar to that employed in the Kind-Chaudron method. The debris is removed from the hole by means of especially constructed sand-pumps or sludgers.

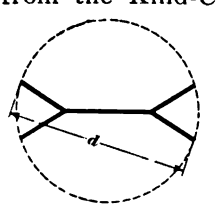

FIG. 64.

CONTINUOUS OR LONG-HOLE METHOD.

227. Drilling.—The ordinary drilling time in a shaft can not exceed one-third of the total time, on account of the fact that the material has to be all or partly removed before the drilling can commence again, and also machine drills can not work to perfect advantage in close quarters. These facts led to the invention of the continuous process, which consists in drilling a number of diamond-drill holes over the area of the proposed shaft, as shown in Fig. 65. These holes are drilled from the surface for a depth of 200 or 300 feet and then filled with water or sand.

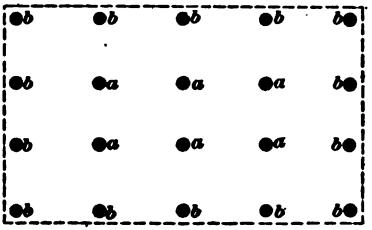

FIG. 65.

228. Blasting.—The central holes marked *a* are cleaned out for 3 or 4 feet, charged and fired. Then the holes marked *b* are charged and fired, to square the sides of the shaft. In this way the work progresses until the desired depth is reached.

229. Advantages.—By this means the drilling is accomplished in one continuous operation, after which the sinking progresses by simply blasting and hoisting the rock. This method is very much quicker than the ordinary practice of using power drills driven by air, but it is usually somewhat more expensive. In cases where it is desired to get the mineral on the market as quickly as possible, the continuous process may prove very useful.

A COMPARISON OF THE DIFFERENT SPECIAL METHODS OF SHAFT SINKING.

230. Pneumatic Method.—The pneumatic method possesses some especial advantages as follows:

(*a*) The work of sinking commences at once and is continued without interruption until the shaft lining is complete to bed-rock.

(*b*) With the pneumatic process an air-compressor is the only auxiliary machine required, while if the freezing process is employed, an ice-machine will be required. A mining company usually has an air-compressor already installed, and in such a case no new machinery will be required.

NOTE.—It is always best to use electric lights in the caisson, and on this account it may be necessary to install a small dynamo if the company does not already have an electric-light system in operation.

(*c*) One great advantage of the pneumatic system is that the bottom of the shaft is always exposed and the workmen know when they have reached a solid foundation, while if the freezing process were employed, there is no method of ascertaining the exact condition of the material at the end of the freezing pipes until the shaft has been excavated to that level.

(*d*) In the case of the pneumatic process, no blasting is required while passing through quicksand, and the material is brought to the surface by means of air-pressure.

231. The Freezing Process.—The freezing process has some advantages as follows:

(*a*) After the ground is frozen, the work progresses as though the formation were solid rock, the material being blasted and hoisted in buckets. The freezing process is applicable to wet formations, whether the material be soft or hard, while the pneumatic process is of advantage only in soft material, for the continued blasting would damage the caisson.

(*b*) The freezing process can be carried to practically any depth, while the pneumatic process is limited to about 100 feet.

232. The Kind-Chaudron Method.—The Kind-Chaudron method possesses some advantages as follows:

(*a*) The work of sinking commences at once, and is prosecuted without intermission until the full depth is reached

(*b*) This method is especially applicable to rock forma-

tions which are very wet, but it is not applicable in the case of quicksand, as are the freezing and pneumatic processes.

(*c*) There is no danger to the men, as in the case of the pneumatic process, where the continued work under great air-pressures materially reduces the health and strength of the men.

(*d*) This process is only applicable to circular shafts, while in the freezing or pneumatic processes, shafts of any shape can be put down.

233. The Long-Hole Process.—The long-hole process has the following advantages: Where the formation is suitable for its use, it is undoubtedly the most rapid of the sinking methods, and owing to the fact that the drilling is completed before blasting begins, it may be possible to employ a somewhat cheaper grade of labor during the work of blasting and hoisting the rock.

METAL MINING.

METHODS OF MINING.

1. Systems of Development.—After a body of ore has been discovered and the preliminary operations have shown it to be of sufficient importance to warrant development, the engineer must decide upon the system to be employed in this development. The system used depends largely upon the character of the deposit, and all deposits may be classified under the following divisions: (1) Open work; (2) closed work.

2. The open work frequently goes under the name open-cut or stripping mines.

3. Subdivisions of Closed Work. — Closed work includes all underground operations and may be subdivided as follows: (*a*) Narrow veins or lodes, such as many of the gold, silver, or silver-lead mines, where the mineral occurs in comparatively thin veins (usually less than 8 feet in thickness). These veins may be at any angle with the horizontal, such that the material will slide in the chutes. (*b*) Narrow deposits or beds which are so flat that the material will not slide in the chutes. (*c*) Wide veins, masses, or regular deposits in which the deposit is more than 8 feet thick, and the dip of the formation may be anything from vertical to flat, but the depth below the surface is such that they can not be worked in the open. (*d*) Irregular deposits of mineral which occur either in broken formations or as pockets in or on top of certain rocks, as, for instance, many of the zinc and some of the gold and silver deposits. (*e*) Special methods.

For notice of the copyright, see page immediately following the title page.

OPEN WORK.

OPEN-CUT AND STRIPPING MINES.

4. Classes.—Mines of this class may be considered under two heads: (1) Cases in which the outcrop of a vein is worked as an open cut or quarry and in which the work may ultimately be carried underground by means of underground or closed mining methods. Fig. 1 illustrates the outcrop of a vein of ore which has been worked as an open cut, but in which, if the work is continued to a great depth, the hanging wall would ultimately cave in and fill the mine. (2) Deposits which partake of the nature of flat beds or veins parallel to and so near the surface that they can be stripped and worked as open cuts or quarries.

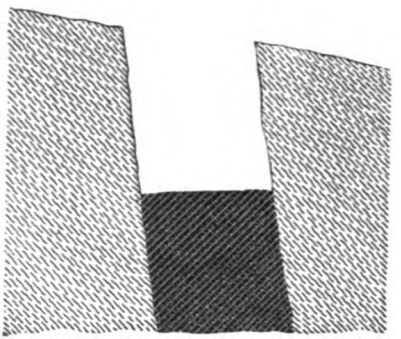

FIG. 1.

Fig. 2 illustrates the outcrop of a deposit belonging to the second class and in which the outcrop could be worked and

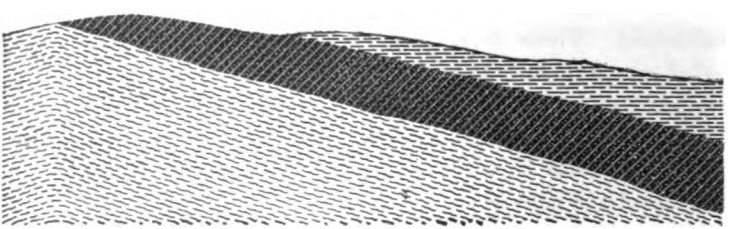

FIG. 2.

much of the overlying rock stripped back and the open cut continued without any fear of endangering subsequent closed work in the deposit at a greater depth.

WORKING THE OUTCROP OF VEINS BY OPEN CUTTING.

5. Precautions. — When the outcrop of a vein or deposit is to be worked as an open cut, certain precautions should be taken.

(*a*) All the surface water should be kept from entering the opening by carrying ditches around the mine in such a way as to divert these surface waters.

(*b*) If the mine is ultimately to be worked from underground, the open cut must not be carried to too great a depth, for if the sides have a tendency to cave, they may crush the roof left to protect the underground workings, thus destroying the mine, if not causing a great loss of life.

(*c*) If the vein material is of a porous nature, so that the water would seep through it to the workings below, there is danger of making the mine permanently wet by allowing the surface water from the open pit to flow into it, and this would cause an increased pumping expense as long as the underground workings were in use. It is frequently the best policy to continue the open work only to a point above the natural drainage level, the portion of the ore between the bottom of the open cut and the top of the underground workings being left until just before the mine is abandoned, when it is removed. This mass of material forms a reserve, the value of which is pretty closely known.

WORKING BEDS OR FLAT DEPOSITS AS OPEN WORK OR BY STRIPPING.

6. Where Applicable.—To this class of deposits belong most of the quarries for building stone, gypsum, many of the steam-shovel and milling iron mines, some of the low-grade gold mines, silver-lead mines, zinc mines, etc. The special arrangements and connections necessary for the working of open-cut or stripping mines will be considered later, under Special Methods of Mining. The question as to how much of the overlying material can be removed with profit, in order that the deposit may be worked in the open, depends on a number of factors, as, for instance, the value

per ton of the deposit, its thickness, the character of the overburden, and the ease with which it may be removed and disposed of. With low-grade material, such as iron or copper ore, it is rare that more than twice as much overburden is removed as the thickness of the deposit to be worked. As a rule, the limits of open work are less than these, though they depend largely upon local conditions.

OPEN-PIT MINES WORKED BY QUARRYING.

7. Some Noted Mines.—When the outcrop of an ore deposit comes to the surface, it is frequently worked as an open pit or quarry. Among the most noted open-pit mines may be mentioned the Mount Morgan gold mine in Queensland, Australia, which has proved to be one of the richest gold mines in the world, and the deposits of which are so located that practically all the ore can be removed as open cuts; the Treadwell gold-quartz mine in Alaska; the Spanish shaly gold mine of California; the Horn Silver silver-lead mine of Utah; and the great conglomerate gold-bearing deposits of the Black Hills in South Dakota. Many of the iron, manganese, lead, and zinc deposits have also been operated by this means.

8. The following are some illustrations of open-pit mines: The "Tilly Foster" mine in New York State was worked as an open pit until the hanging wall threatened the destruction of the mine by frequent falls of rock. It also exerted such great pressure upon the underground workings that it was found impossible to recover much of the deposit. As a result, a large amount of the hanging wall was blasted down and hoisted out; the mine was then continued as an open pit. Fig. 3 illustrates the method in which both the rock blasted from the hanging wall and the ore were removed. Cable tramways were used, and the bodies of the ore-cars were taken from their trucks and lowered into the mine. When filled, they were hoisted and replaced upon the trucks, ready to be drawn to the dump

by horses. Fig. 4 illustrates a mine in which the material was blasted down and then loaded into ordinary mine-cars.

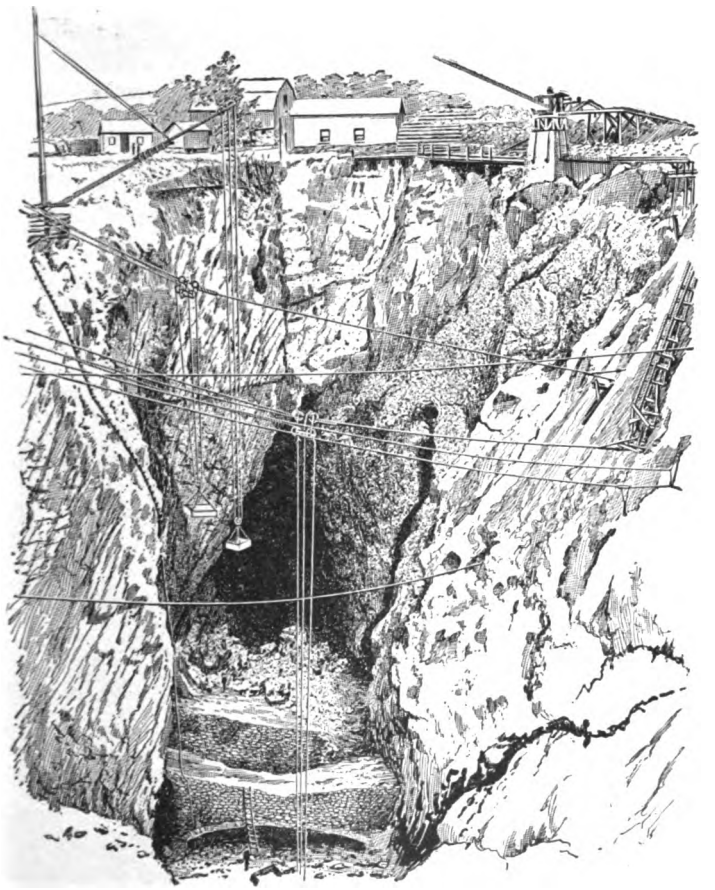

FIG. 8.

This was the outcrop of a vein dipping into the formation at a slight angle.

9. Fig. 5 illustrates one of the pits of a large mine after most of the ore had been removed and the railroad tracks taken out. Originally the mine locomotive came in through

FIG. 4.

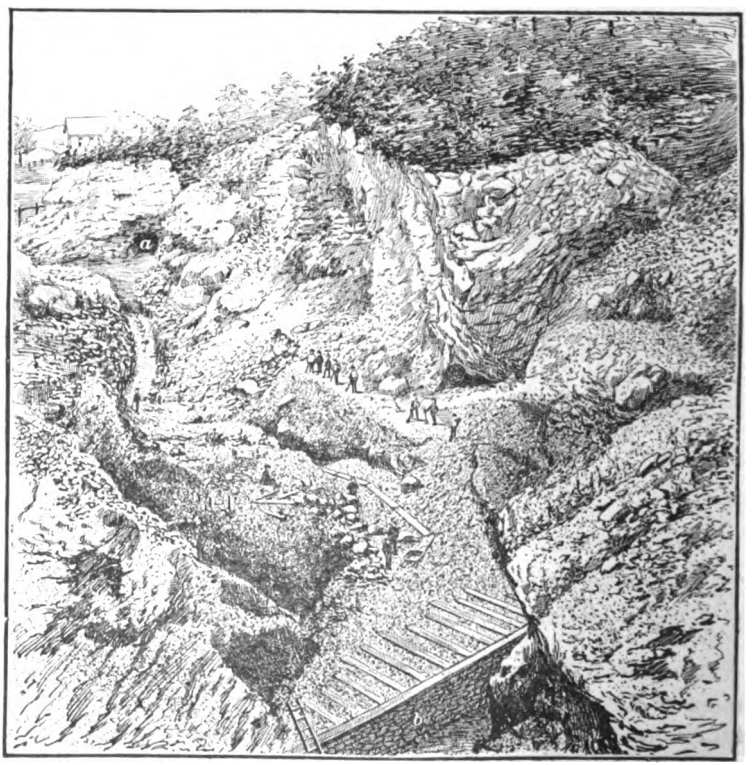

FIG. 5.

the tunnel *a* seen at the farther end of the opening. As the workings gained in depth another adit was driven and the dock *b* shown in the foreground constructed. The ore was dumped over this dock and taken through the adit by means of large mine-cars and a locomotive. In the illustration a gang of men are scramming the mine, that is, working out any small bodies of ore which had been left on the sides during previous operations.

10. Advantage.—One advantage of this system of mining is that the material can be blasted down as a series of steps or benches (as in underhand stoping), and on this account the stripping of the deposit need be carried on only as the upper bench advances.

11. Disadvantage.—One disadvantage is that if the deposit is to be worked as an underground mine in the future, there is danger of the walls of the pit caving and so causing great damage to the mine.

STEAM-SHOVEL MINES.

12. General Statement.—Where the ore or material to be removed occurs in large flat beds, it is possible to strip the overlying material, thus exposing the ore. After this the ore is simply loaded on to ordinary railroad-cars by means of the steam shovel. It is sometimes necessary to somewhat loosen the ore by blasting. When the steam shovel is used for removing a deposit, it becomes necessary to take off a layer a few feet thick over practically the entire area; then the railroad track is moved and another bench or slice removed.

13. Advantages.—The advantages of this method are: (1) The ore can be loaded very cheaply. (2) The output can be increased almost indefinitely by simply increasing the number of shovels in use. (3) No hoisting machinery is required.

14. Disadvantages.—The disadvantages are as follows: (1) It sometimes becomes necessary to make extremely long and deep cuts to bring the railroad-cars on to the surface of the ore, and this may overcome the advantage of cheap loading. (2) On account of having to strip a large area of the deposit before mining is commenced, this method throws a great deal of dead work at the beginning of the mining operations. (3) The entire area must be kept free from water.

15. Objection to High Benches.—In the case of a steam-shovel mine, if the successive benches cut by the

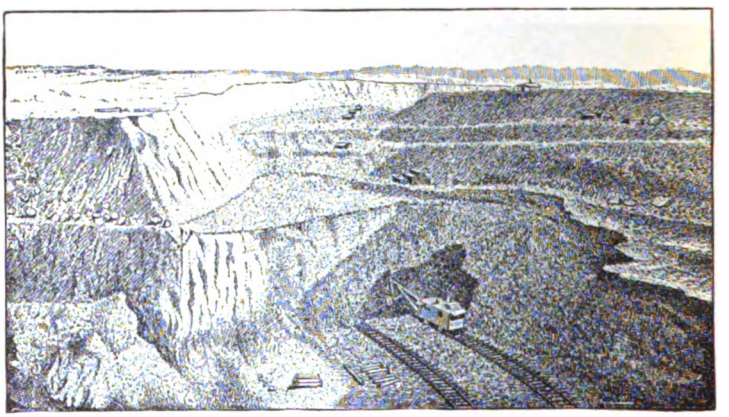

FIG. 6.

shovel are very high, it becomes difficult to properly sample the ore and to keep the grade uniform. Fig. 6 shows a steam shovel working on a very high bench of ore, above which can be seen the stripping which has been done in uncovering the deposit.

16. Back-Acting Steam Shovel.—Fig. 7 illustrates a special form of steam shovel which has been employed for working comparatively thin beds of material. The ordinary steam shovel strips the deposit, while the special steam shovel is so constructed that it can excavate the material which it has just passed over. This form of

excavator has found an especial field in the working of phosphate deposits, but there is no reason why it can not be applied to other deposits.

FIG. 7.

17. Working the Outcrop of Deposits.—At times the outcrop of deposits having a slight dip can be worked with the aid of the steam shovel, as, for instance, some of the iron mines in the Southern States and many of the manganese and similar deposits.

OPEN-CUT MINES WORKED BY THE MILLING SYSTEM.

18. Description.—This is a combination of open-pit and underground work, and is applicable to shallow deposits of great area, as the Mesaba iron-ore beds. Shafts or

inclines are sunk at the edges of the deposit or in the country rock. From these, drifts are carried under the ore and raises driven to the surface. The portion of the deposit to be milled is first stripped, and the stripping progresses only as more milling ground is required. After the deposit is stripped and the raises have reached the surface, the miners simply blast and work or shovel the ore into the raises, through which it slides to the drifts below, from where it is trammed in cars to the shaft or incline and hoisted to the surface.

19. Output.—The output per man employed is very much greater in the milling system than in any other in which the ore is removed chiefly by manual labor; thus,

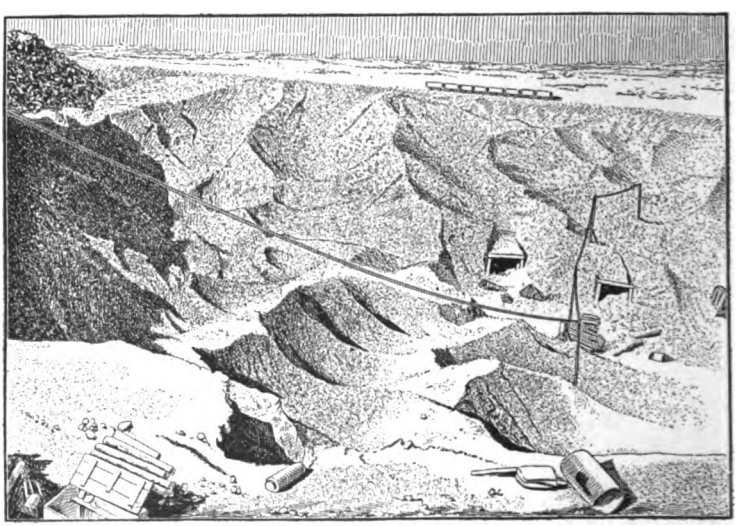

FIG. 8.

while from 4 to 6 tons per man per day is considered satisfactory for underground mines, it is nothing unusual for the production at milling mines to average 40 tons per man per day, counting all the men both above and below the ground, and twice this amount has been mined for short periods under favorable circumstances. An open-pit

milling mine presents the appearance of a series of inverted cones or volcanic craters, into which the men are constantly working the ore, as shown by Fig. 8.

20. Illustrations. — Fig. 9 shows a cross-section through three raises in a milling mine. *A* is the drift; *B*,*B*,*B* are the raises, and *C*, *C*, *C* represent the manner in which

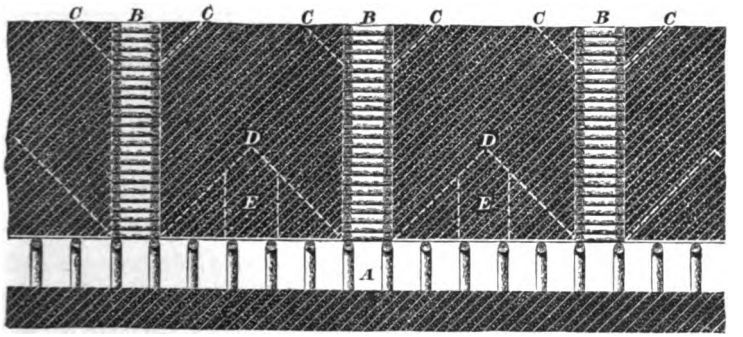

FIG. 9.

the ore will be broken down. This will continue until there are ridges between the adjacent raises, as at *D*, *D*. After this other raises will be driven half way between the previous ones, as illustrated by the dotted lines at *E*. This is continued until practically all the ore above the drift has been removed. Then another series of drifts is driven lower down in the formation and the process repeated.

21. Advantages.—The advantages of this system are: (1) The entire deposit does not have to be uncovered at one time, hence there is not as large a drainage area that must be kept free from water as in the steam-shovel mines. (2) No deep cut has to be driven for the cars to pass into the mine.

22. Advantage of Working Outside.—One advantage that applies to all open-cut work is, that, as a rule, the health of the miners is better when they are in the open cuts than when forced to work underground, but at the same time storms may seriously interfere with the work, and mining would practically cease during severe winter weather.

CLOSED WORK.

GENERAL PRINCIPLES OF UNDERGROUND DEVELOPMENT.

23. Factors That Have to Be Considered.—Ordinarily, before adopting a permanent plan of operation, it is necessary to reconcile or make a compromise between two very different things.

1. It is desired to secure returns from the mine in the shortest possible time and to avoid entering upon very deep sinking or long tunneling operations, from which no profit can be expected within a reasonable time.

2. To so plan the development that it will fit in with the other and larger workings, in case the mine grows and proves profitable.

It is practically impossible to lay down general rules, as each case forms a problem by itself; still these matters must be carefully weighed and a system of working decided upon in accordance with the facts as ascertained concerning each particular property.

24. Levels.—The conditions governing the form of opening to be used have been considered in *Preliminary Operations at Metal Mines.* After having decided whether the mine is to be worked through a tunnel, shaft, or incline, or by means of a combination of two or more of these openings, it becomes necessary to provide the main underground passages leading to the openings through which the ore is removed. These passages through which the ore is brought to a shaft or incline are commonly called levels. The level is really a drift, but has to be kept open as long as there is ore tributary to it or until prospecting and development work in that direction has proved that it would be useless; hence it requires better timbering than the ordinary drifts.

25. Distance Between Levels.—The distance between levels should be measured along the dip of the lode or deposit, and not vertically, the object being to open up a

certain amount of ground between the successive levels. A safe working rule in regard to the distance between levels is as follows: The richer and more irregular the deposit, the closer together the levels must be run; while with low-grade deposits, the levels can be farther apart. Ordinary levels are placed about 100 feet apart, and, as a rule, they should never be run closer than from 50 to 60 feet, measured on the dip. In the case of very rich deposits, which occur in small pockets scattered through the rock, the mining must be carried on by small passages following the stringers of ore. This is sometimes called "coyoting," and is after the Spanish-American fashion. Even when the mine has to be worked in this irregular fashion, it is best to run regular levels from the shaft or incline at certain points, in order that the ground may be systematically blocked out and that there may be stations or landings where the cars can be brought to the shaft.

26. Position and Grade of Levels.—Main working levels are often placed in the foot-wall and are connected to the workings by means of cross-cuts. All main working levels should, if possible, have a rise away from the stations at the shaft, so that the loaded cars on their way to the shaft will be assisted by the down grade, while the empties returning to the workings are pushed against the grade. In the case of levels, the grade is rarely less than 1 foot in 100, as this affords good drainage.

27. Levels should be of ample size to allow headroom and a clear passage for the workmen. When working levels are driven along very wide veins, it is necessary to cross-cut to the walls in order to determine the width of the deposit. These cross-cuts may be driven at intervals of about 50 feet.

28. Connections Between Levels (Winzes or Raises).—For convenience in handling ore, to explore the ground, and for ventilation, upraises or winzes are driven between the levels. Ordinarily, it is cheaper to drive an upraise than to sink a winze, and where the formation is very wet it has decided advantages; but in case a mine is

extremely hot, it may be impossible for men to work at the top of a raise, and then sinking winzes is necessary. Where mines are laid out for a regular system of working, the winzes are usually driven from 50 to 100 feet apart, though sometimes the distance may be greater.

29. General Principles of Horizontal Development and Connection.—There are two main principles or systems of blocking out and developing metal mines: (1) A more or less regular system of galleries, drifts, cross-cuts, and winzes, in which the general scheme is based upon certain working rules. (2) A less regular and more flexible system, consisting mainly in following the ore or indications of ore irrespective of systematic mining, or leaving that to be introduced later. As has already been stated in *Preliminary Operations at Metal Mines*, development work should always be done in advance of the mining, so that there may be reserves of ore in sight.

30. Deciding Upon the System of Mining.—The mine having been developed to a proper extent, the manner of taking out the ore must be decided upon. It is evident that no one system of taking out the ore can be applied to all cases. Sometimes the situation admits of but one method, but usually different engineers would disagree as to the best method to pursue. It is necessary to bear in mind that ore deposits are seldom so regular in shape and size or so continuous that work can be carried on as systematically as indicated by the diagrams given in text-books. While modifications may be advisable, it is always best to have a definite plan in view, in order that the work may be carried out in a workmanlike manner and for the sake of economy, convenience, steadiness, and rapidity of output.

Chief among the conditions determining the choice of a system of mining are the following: Width and inclination of the deposit, amount of water, and the timber available.

31. Width of Deposit or Vein.—The most convenient width of vein or deposit for all considerations, such as timbering, mining, etc., especially when dealing with the

precious metals, is about the same as that of the ordinary drift or level, which may be taken at not over 8 feet. If the vein is narrower than this, the result is practically the same, since it is always necessary to cut enough material from the wall to gain room for the men to work. When the width of the deposit exceeds that of an ordinary drift, it becomes necessary to use some of the special systems of timbering or filling with waste material.

32. Strength of Walls.—In most cases the hanging wall or roof is the one that has to receive attention, if there is any weakness at all. By weakness is meant such unreliability that ordinary heavy stulls will not support the walls, and it applies to soft, shaly rock, to rock that disintegrates on exposure to the air, to broken country rock, etc., and sometimes it may be applied to the next overlying slice of ore. A system of heavy timbering by using frames, with or without filling with waste material, may be necessary in the case of a wide vein.

33. Inclination of Deposit.—This may vary from a practically flat bed to a vertical vein, and it is evident that this dip of the formation has much to do with the choice of method or style of timbering for securing the walls.

34. Water.—It is very desirable to drain the slopes from below; hence, if the mine is wet, this will require working up from a lower level to a higher or providing means for the escape of the water from the higher levels (if underhand stoping is used). At times the water flowing into the stope naturally seeps through to a lower level and thus finds its way to the sump of the shaft.

35. Timber Available.—The amount, size, and quality of the timber to be had, and especially its cost, must be taken into consideration, and this point may determine the system of mining.

36. Amount of Ore Taken Out.—In mining for metals, all the ore that can be handled with a profit is taken

out. Pillars of paying ore are not left to support the roof or sides. The method of timbering is therefore an important consideration.

37. Excessive Handling.—An item of expense to be guarded against is the excessive handling of ore in the stopes. More than one shoveling is seldom, if ever, warranted. It increases the expense very rapidly. Wheelbarrows are frequently used for conveying the ore from the miner to the loading places, but their use should be avoided as far as possible.

METHODS OF EXTRACTION.

NARROW VEINS OR LODES.

38. Mining Systems in Use.—In regular veins and steep beds one of two forms of stopes is employed. These are **underhand** and **overhead** stoping. There is much to be said for and against each, but each has its special advantages. The various methods of extraction can be considered under the following heads: (1) Underhand stoping in the usual way, working downwards from a higher to a lower level without the assistance of a winze connecting the two levels. (2) Underhand stoping, beginning at the top of a winze and working downwards. (3) Overhead stoping. (4) Miscellaneous methods. Under this head will be considered the various methods applicable to special deposits.

39. Underhand Stoping (Regular).—Fig. 10 (*b*). If the work extends along the strike of a vein, the miner selects the points where the ore seems best, or if the ore is continuously workable, he chooses points at a convenient distance apart (say 150 to 200 feet) and begins to sink by cutting out a block, 6 feet or more long, to a depth of 6 feet or more. This gives the first stope floor. From this floor work is continued each way, leaving tracks and timbers, if any exist, overhead until a sufficient distance has been run to allow room for cutting out the next (No. 2) floor. Work

then goes on simultaneously on both floors each way, No. 2 being kept about 6 feet behind the upper floor until room is gained on No. 2 floor to permit sinking to No. 3 floor, which will be the same distance below as No. 2 is below No. 1. In this way the work proceeds until the next main level is reached or the ore gives out. If there is much waste rock, plank or lagging platforms are laid upon stulls put across the stope, and the waste material is thrown back on to these platforms. The platforms must be secure enough to protect the men on the lower floors. As it is generally necessary to employ stulls to support the hanging wall if the vein has any considerable dip, the expense of hoisting the waste can be avoided by using these platforms for its stowing. At first

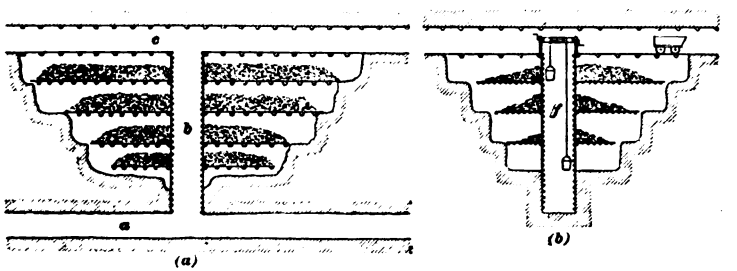

FIG. 10.

the material can be tossed up from one floor to the next above, and so on up to the main level, but as the stope deepens it will be necessary to use either a windlass and bucket or some portable hoisting machine for removing the material from the lower floors of the stope. It is also necessary to install some form of pump, or to remove the water-collecting in the bottom of the stope by means of water buckets. In Fig. 10, (*b*) illustrates the system of underhand stoping by the regular method.

40. Advantages.—The advantages of this system of stoping are as follows: (1) The ore can be extracted at once without waiting for the shaft to be sunk farther, and a lower level driven underneath the point selected for opening the stope. (2) The work of drilling and picking is easier than

in overhead stoping. (3) When the roof and loose material are secured, there is less danger of the ore and rock falling upon the men. (4) It gives a better opportunity for sorting the ore and avoiding the loss of small pieces and particles of rich ore than does overhead stoping. (5) If the mine should be abandoned, the cost of driving the lower level is saved.

41. Disadvantages.—The disadvantages are as follows: (1) The labor and expense of raising the water and material to a higher level are great drawbacks, and in the majority of cases would rule out this method of stoping. (2) The water may be troublesome on the lower floors, and even if means are provided for raising it or pumping it, the bottom of the stope will always contain some water if the mine is at all wet. (3) Much timber (stulls, planks, boards, or lagging stuff) will be consumed in the platforms and can not be drawn out or recovered. (4) If the stulls give way and allow the dirt or waste upon them to fall, it will cover the surface of the ore, and on this account, when a mine has been worked by underhand stoping and is allowed to stand idle for a time, the stopes are usually found in very bad condition when work is resumed. (5) The miner has no means of knowing the condition of the timbering in the stope above. (6) If the timber supporting the waste gives way, the falling material may cause much loss of life.

42. Underhand Stoping (Cornish).—Fig. 10 (*a*). This method consists in driving a level *a* to beneath the point where the stope is to be started. Connection is then made by raising from the lower or sinking from the upper level, as at *b*. This winze permits the material to be thrown to the under level and drains the stope thoroughly. The work of cutting out the floors and breasts begins at the top of the winze and proceeds as in the former case, except that the material is rolled or allowed to slide to the winze, through which it falls to the level below, from where it is trammed to the shaft for hoisting.

43. Advantages.—The advantages of this method are: (1) Greater economy than the regular method of underhand stoping, providing the lower level has already been driven or must be driven. (2) Better ventilation and an extra passage through which the men can escape in case of accident. (4) The fact that the water is disposed of without an extra pump.

44. Disadvantages.—The disadvantages are: (1) As the steps are made steep and may become a somewhat rough slant, there is danger of the men falling from the working places, or of loose rock falling upon the men. (2) It leaves old stopes in bad shape; disadvantages (3), (4), (5), and (6) of the regular system also apply in this case. In Fig. 10, (*a*) represents a stope being worked by the underhand Cornish method; *a* is the lower drift or level, *c* is the upper drift or level, and *b* is the raise.

45. Overhead Stoping.—When this system of working is employed, the ground between the two levels is

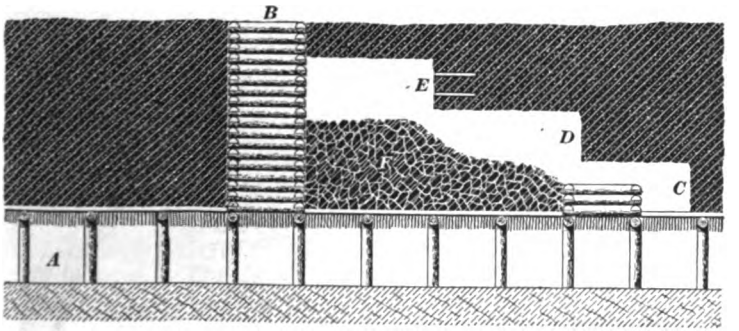

FIG. 11.

blocked off with some degree of regularity. There are several systems of applying it. One is (after two levels have been run to a considerable distance) to make raises from one level to the other, as illustrated by *B*, Fig. 11. After this, the successive benches of the stope are started. In starting the first bench *C*, the men stand upon the timbering of the drift *A*. After this one is advanced a sufficient distance,

D may be started and after that *E*. Where there is much waste material, it is left in the stope on top of the drift timbers and forms a platform upon which the men stand while working. The ore is thrown down through the chutes or passages provided for the purpose at intervals through the waste material. It has been claimed that in overhead stoping the drilling had to be done upwards. This is not always so, for after a bench is started, the breaking may be continued by breast holes, as shown at *E*, Fig. 11. In case the entire vein is of sufficient value to be removed, a portion of the ore may be allowed to remain in the stope as a platform upon which the men can work, and after the stoping has reached the next upper level, this broken ore may be drawn out and hoisted.

46. Overhead Stope Carried as a Breast.—Fig. 12 illustrates a modification of the overhead stoping which is frequently employed in the case of pitching veins, where

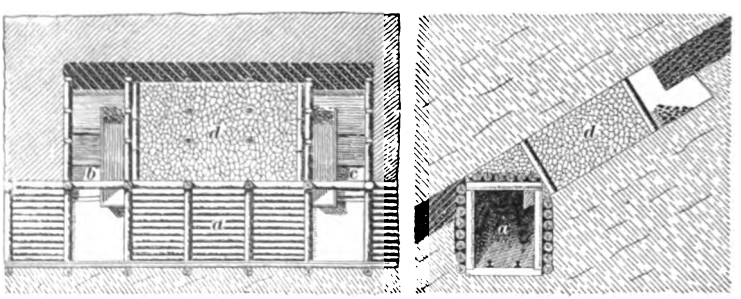

FIG. 12.

the roof or hanging wall requires considerable support. The main drift *a* is driven, after which the portion of the roof between *b* and *c* is advanced as a breast or stope; the two, *b* and *c*, are timbered as the work progresses. The hanging wall is kept in place by the timbering of these raises and by stulls placed in the space between them. One or both raises may contain chutes for the ore, and one will contain the ladderway. Any waste material is packed in the space *d* between the raises. In this way the face is advanced until

the next upper level is reached. After these stopes have been worked out between two levels, the pillars may be removed in the same manner, the ore being sent down through the same raise used for removing the ore from the rooms and the roof being held in place by the timbering already mentioned, the packing with waste rock in the space *d*, and the placing of the stulls and waste rock as the removal of the pillars advances. In case the ventilation is poor, a raise may be carried in advance of the work to the next upper level. While removing the pillars, the work is pushed with all possible rapidity, and after it is accomplished the hanging wall is allowed to settle upon the packing. When advancing by this method, the holes are all uppers or breast holes, and if the vein is thin, it is customary to remove a portion of the foot-wall and then blast the ore down upon the canvas or planking. If the foot-wall is very much harder than the hanging wall, it may be necessary to remove the hanging wall first and then blast the ore up, but this is not considered as good practice as the method already described.

47. The method illustrated in Fig. 12 is really a form of breasting, or mining by breasts. When it is necessary to fill the excavation with rock in order to support the hanging wall, it may be necessary to continue a raise in advance of the stope to the next upper level and to bring filling material from some other part of the mine and send it down to the stope. This is always the case when the vein is thick and practically the entire deposit is of sufficient value to pay for its extraction.

48. Overhead Stoping from Bottom of Winze.— It is not always necessary that the shaft be extended and the drift run under the stope before overhead stoping can be commenced. Fig. 13 illustrates a case in which a winze has been sunk and stoping commenced at its bottom. *A* is the winze; *B* the upper level; *C* is the drift, which, if the shaft is subsequently carried down, will become the lower

level. The disadvantage of this method is that the winze *A* has to be provided with a hoisting and pumping equipment.

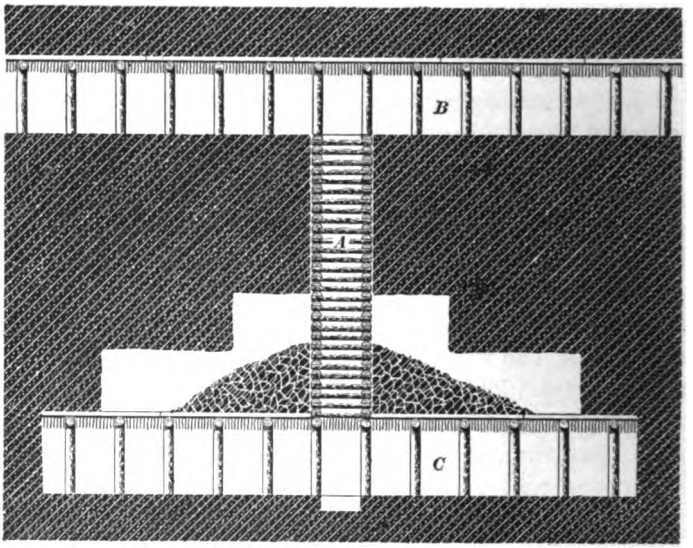

FIG. 13.

The advantage is that the ore may be attacked by the overhead method and thus more easily removed.

49. Overhead Stoping Without a Winze.—Fig. 14 illustrates an overhead stope which has been carried up without a winze. In mines where the entire vein is to be removed and the deposit is practically vertical, this method is frequently employed, the men standing upon platforms, as shown, while they work. A sufficient amount of ore is allowed to remain on top of the drift timber to protect it during the process of stoping. When the stope has reached the next upper level, this ore is drawn out and hoisted, and at times not only the timber in the platforms may be recovered, but the drift timber itself is sometimes removed. In some mines this process was continued until there was a stope over 500 feet high without a stick of timber in it and from which every pound of ore had been removed.

50. Application.—The methods of overhead stoping illustrated in Figs. 11, 13, and 14 are especially applicable

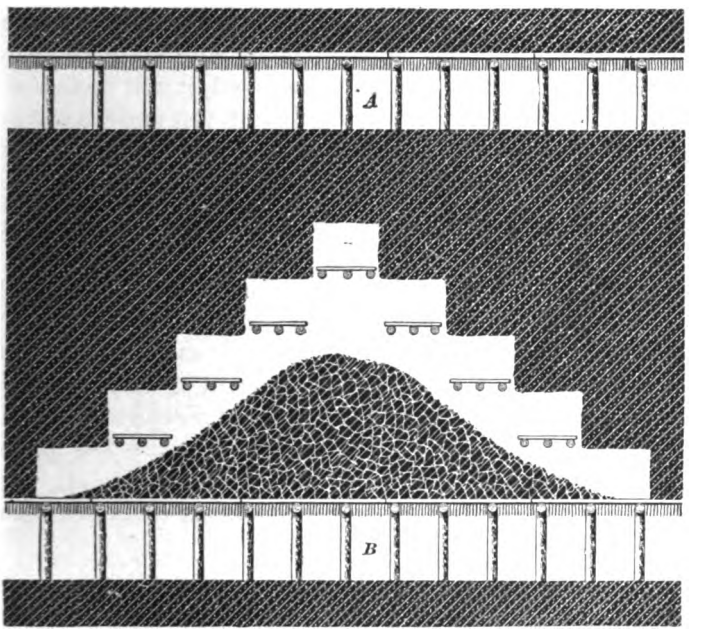

FIG. 14.

to vertical or very steeply inclined veins. The method illustrated in Fig. 12 is applicable to veins having an inclination such that the ore will slide in chutes to the level *a*, and yet where the formation is so steep that the hanging wall exerts considerable pressure upon the timbering.

51. Special Timbering.—When mining in particularly bad ground, it may be necessary to timber the entire stope, and even to use lagging on the sides as well as the top. This calls for special consideration in the timbering and will be treated under the head of "Mine Timbering."

52. Advantages of Overhead Stoping.—Some of the advantages of overhead stoping are: (1) No hoisting, pumping, or bailing is required in the block of ore being

worked, as is the case when the underhand system, without a winze, is followed. (2) Water gives no trouble in the stopes. (3) Less timber is required, and much of that used may be recovered. (4) In general, it is not only more economical, but leaves the stope in more workmanlike shape, and if the mine is temporarily abandoned, it will be found in better condition for future work than if the underhand system had been followed. (5) In the overhead system, gravity assists in breaking the ore.

53. Disadvantages of Overhead Stoping.—Some of the disadvantages of this system are: (1) There is greater danger than in the underhand stoping, but as the miner is always close to the roof, he can test its strength by tapping, and if it sounds hollow, he can knock off the insecure rock. (2) When overhead drilling is required, it is more inconvenient than breast holes or downward drilling. (3) In overhead stoping there may be greater loss of fine ore, which becomes mixed with the waste material. This can be obviated by laying down old canvas or board floors, upon which the material is blasted.

54. When overhead stoping is continued in successive benches, it has been likened in appearance to the under side of a set of stairs, while underhand stoping appears like the top of a set of stairs.

NARROW FLAT DEPOSITS.

55. Placing of Drifts and Levels. — Flat veins having a continuous ore-body require lateral drifts placed much closer to each other than the levels of an ordinary mine. This is especially necessary on account of the fact that the ore will not slide on the floor in chutes to the drifts or levels, but has to be shoveled from the place where it is broken to the car. On this account, lateral drifts may be placed at about 35 or 40 feet apart, as shown in Fig. 15. In this case, S is the shaft; C, C, C are the lateral drifts in the vein V, and E and F are two levels of the mine. The lateral drifts are connected with the main level gangways E and F

through the raises *D*, *D*. This system divides the ore-body into a series of blocks between the lateral drifts *C*, *C*. These blocks are usually attacked from both sides, that is, from above and below, the miner shoveling the broken ore into

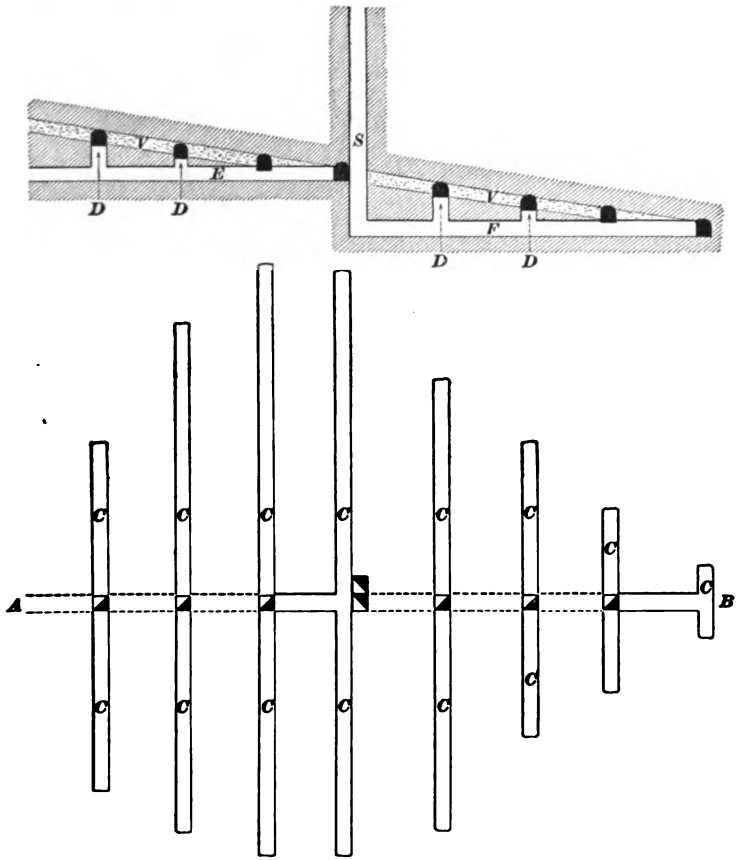

FIG. 15.

the car on the track or to a platform near the track. The waste material may be packed into the workings behind the miners as they advance.

56. Method of Attack.—Fig. 15 illustrates two main working levels *E* and *F*, which in this case are 30 feet apart,

vertically. When the blocks between the drifts *C*, *C* are attacked from both sides, it may be necessary to first drive raises between the drifts, in order to drain the blocks. The method of attack will then be as in the case of underhand and overhead stopes; that is, the advance will be by successive steps or benches until the entire deposit is removed, the roof being supported upon the waste material and timbering.

WIDE VEINS, LARGE MASSES, OR REGULAR DEPOSITS MORE THAN 8 FEET THICK.

57. Introductory.—When large masses of valuable ore occur at such a depth from the surface that stripping is out of the question, it becomes necessary to work them by one of the special systems for underground work.

58. Square Sets.—When the rich silver deposits of the Comstock Lode in Nevada were discovered, the owners found it impossible to remove the entire mass by means of any known form of timbering, the necessities of the case

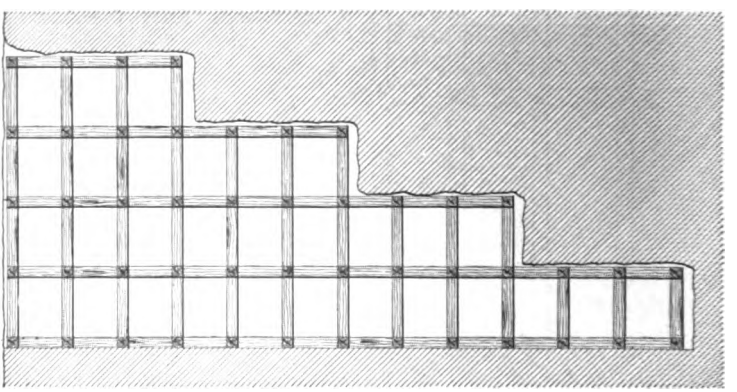

FIG. 16.

resulting in the invention of the square-set system of timbering. The methods of making the joints and of placing the timbers will be considered under the head of "Mine Timbering." When stopes are timbered with square sets, the

work is carried on by means of an overhead system of stoping, as shown in Fig. 16. Fig. 17 shows the appearance of a stope timbered with square sets made from the round timbers. Where the weight of the material is not too great and the deposit is to be removed quickly, square sets may be

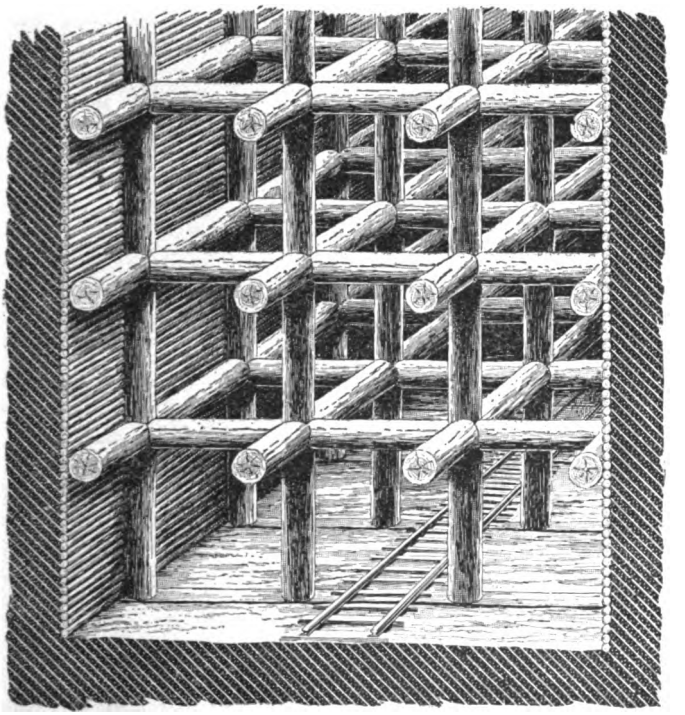

FIG. 17.

employed without any subsequent means of support. The method of taking up the sets of an under stope upon those of the lower stope will be considered in connection with mine timbering. In case the pressure upon the timber is excessive, or it is desired to keep the workings open for some time, it may be necessary to either fill the space between the sets with waste material or allow the broken ore to remain temporarily between the timbers.

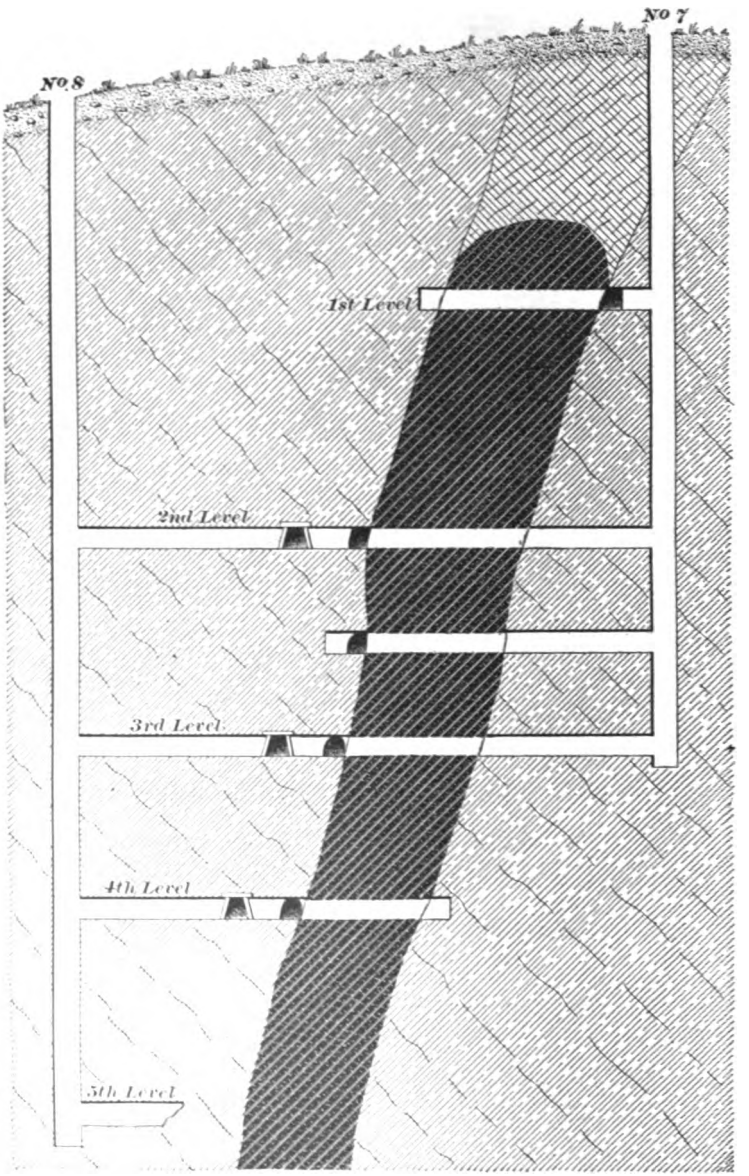

FIG. 18.

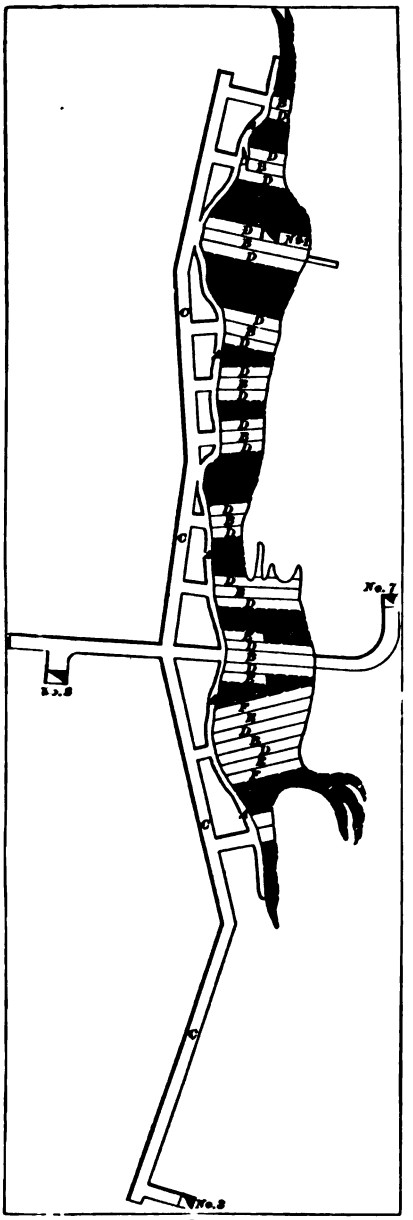

FIG. 19.

59. Filling.—The method of filling openings with waste rock may be carried on either by using light timbering and subsequently assisting the timbering by filling the space with rock, or the mining may be done with little or no timbering, the filling being depended upon entirely for holding the material in place. It might be well to give a few illustrations of cases in which the filling method has been successful, as in no two instances will the conditions be exactly alike.

60. Transverse Stoping With Filling.—At the Cabezas del Pasto copper mine, in Spain, the filling system has been used very successfully. Fig. 18 illustrates a cross-section of the deposit, showing the levels and main drifts; Fig. 19 is a plan of the third level of the mine; Fig. 20 is a longitudinal section of the mine; and Fig. 21 is an illustration showing the order of breaking the material. The process is as follows: After

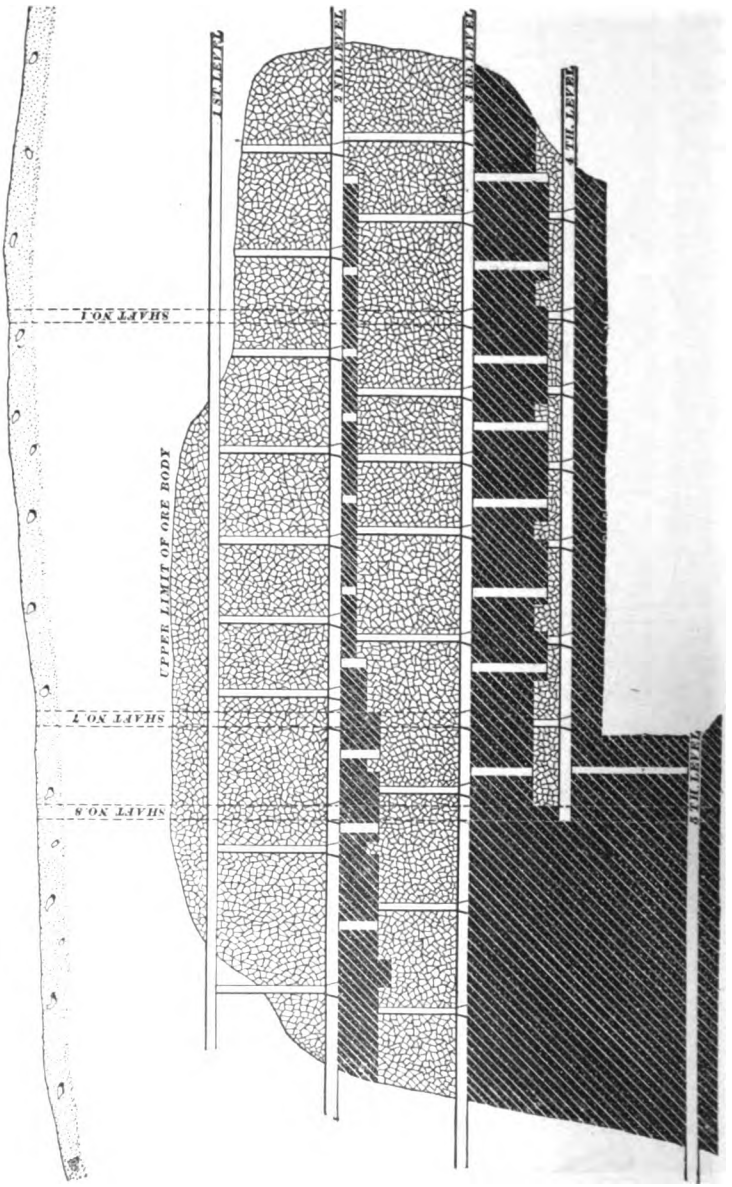
1ST LEVEL
2ND LEVEL
3RD LEVEL
4TH LEVEL
SHAFT NO 1
SHAFT NO 2
SHAFT NO 3
UPPER LIMIT OF ORE BODY
4TH LEVEL

FIG. 20.

exploring the deposit and determining its form and position, the extraction shaft *No. 8*, the pump shaft *No. 3*, and the rock shafts *Nos. 1* and *7* were sunk. Cross-cuts were run from the various levels (which were about 65 feet apart) to the deposit, and the drifts *A*, *A* were run along the hanging wall of the deposit, following all the changes of direction, and thus determining the exact boundaries of the ore. Cross-cuts were also run through the deposit about 33 feet apart. After this the main haulageway *C C*, Fig. 19, was driven through the country rock of the hanging wall practically parallel to the deposit, and from this haulageway cross-cuts were driven to connect with those which had already been driven through the deposit from the exploration drifts *A*, *A*, and winzes sunk between the levels. The system of working then proceeded as follows: A cross-cut 6 feet high and 6 feet wide was driven from the hanging to the foot wall of the deposit, as indicated by *B* in Figs. 19 and 21. After this cross-cut was completed, rock was brought down from the surface to the next level above and dumped through the winzes into the drift *A*

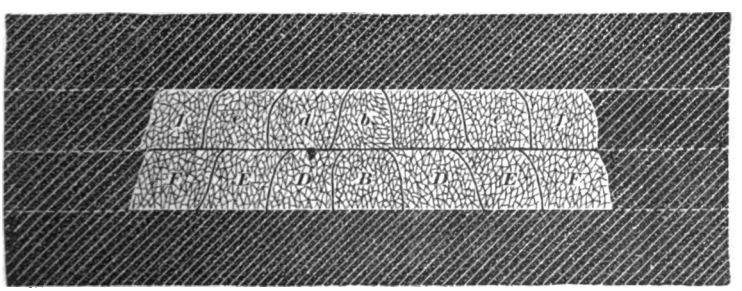

FIG. 21.

near the end of the cross-cut. The cross-cut was then carefully packed or filled with this waste rock. The next cross-cuts *D*, *D*, Figs. 19 and 21, were driven on each side of the one which had been filled. These were then carefully filled and the cross-cuts *E*, *E* were driven. After these had been filled, the cross-cuts *F*, *F* were driven and filled. This process was continued until a layer of ore

6 feet thick had been taken from under the entire deposit. Next, the drift *A* was also filled and a new one of the same dimensions driven immediately above it. While filling the drift *A*, chutes were provided through which the ore from the new drift could be thrown down to the cross-cuts connecting with the main haulageway *C*. These chutes were lined with stonework built up of large blocks without mortar. After the new drift on top of *A* had been driven, a similar slice was taken from the ore by driving and filling the cross-cuts *b*, *d*, *e*, *f*, as shown in Fig. 21. A second cross-cut was not started until the one next to it had been carefully filled. It was found that the cost of driving the first cross-cut *B* was one and one-half times as great as the cost of the succeeding cross-cut on the same level. This is explained by the fact that all the succeeding cross-cuts had one free face, that is, one face next to the filling, and hence the blasting was much easier. In all the succeeding slices, all the cross-cuts after the first had two free faces, and hence the cost of mining was only one-third that of driving the first cross-cut *B*. The filling material was quartzite rock, which was quarried from the top of a hill near the mine. None of the small material from the quarry was put into the mine for two reasons: First, it was much more expensive to handle the small material underground, and second, the small material could not be arranged in sufficiently close order to prevent the settling of the roof, while the larger pieces could be so thoroughly wedged in that little or no settling took place.

61. Both walls of this deposit were of much softer material than the vein material. Several levels of the mine were attacked simultaneously, and it was found that the filling of the upper levels had become so firmly packed that little or no difficulty was experienced in removing the entire deposit. The illustrations show the condition of the mine on July 1, 1891. The deposit to which this method was applied is about 500 feet long and varies from 20 to 75 feet

in width, the average width being about 32 feet. The rock for filling in this case was brought from the quarries in small cars. The rock shaft was provided with balanced cages which were controlled by a drum with a brake only. The car of rock descending on one cage drew up the empty car on the other cage, hence no expense was incurred for hoisting by power. After the quarry cars had reached the level above the one on which rock was required, they were run to the top of the rock chutes and dumped, the empty car being returned to the cage and hoisted by the descent of the loaded car.

62. Longitudinal Back-Stoping With Filling.— The next example is that of longitudinal back-stoping with filling, the ore being exceedingly hard and tenacious, while the walls of the deposit are of a soft and crumbling nature. The deposit was first worked as an open pit, but this had to be abandoned on account of the caving of the sides. Figs. 22 and 23 are cross-sections of the deposit. Fig. 22 shows one of the main shafts through which the ore is removed. Fig. 23 shows a rock chute or raise along the foot-wall through which rock for filling is brought down from the open cut above. In Fig. 22 it will be noticed that there are some raises between the working shaft and the deposit. These were put in as ladderways, through which the men could escape in case of fire in the main shaft. Fig. 24 is a longitudinal section showing three levels of the mine. Fig. 25 is a plan of the fifth level of the mine, showing the drifts timbered in the filling, together with the raises or cribs through which the ore is thrown down to the drift for tramming to the shaft. The raises *A*, *A* are made for dumping rock to the levels below for filling; the process is now carried on as follows: A cross-cut is driven from the shaft to the deposit, as shown on the eighth level, Fig. 22. After the cross-cut reaches the ore, a stope 15 or 20 feet in height and the entire width of the deposit is carried along for some distance, and then a drift is timbered, as shown on the seventh level. Cribs are also built up at the sides of the

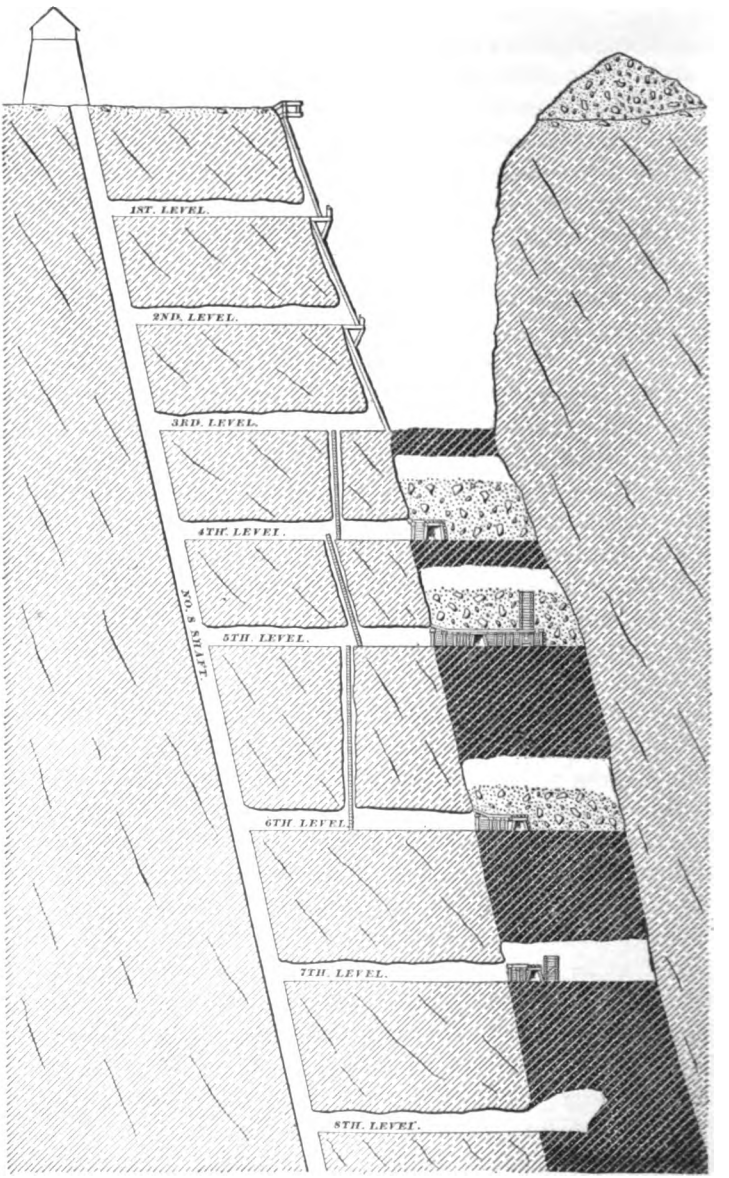
1ST. LEVEL.
2ND. LEVEL.
3RD. LEVEL.
4TH. LEVEL.
5TH. LEVEL.
6TH. LEVEL.
7TH. LEVEL.
8TH. LEVEL.
NO. 8 SHAFT.

FIG. 22.

drifts to form chutes. Rock is then brought down from the rock chute and the stope is filled nearly to the back. Next,

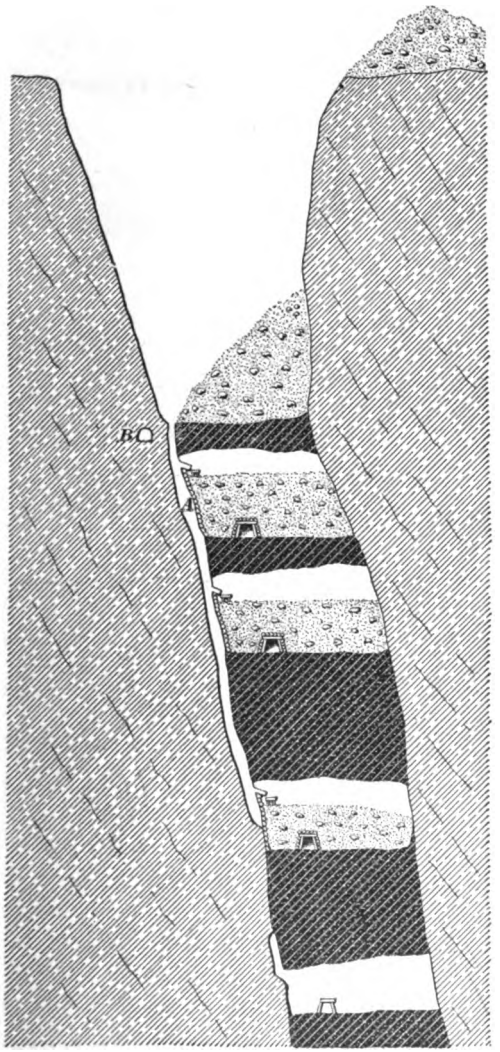

FIG. 23.

about 10 feet of the roof is blasted down, broken up, and thrown through the chutes to the level below, from which it is

trammed out to the shaft. This condition of affairs can be seen in the sixth level. Another layer of filling is then put

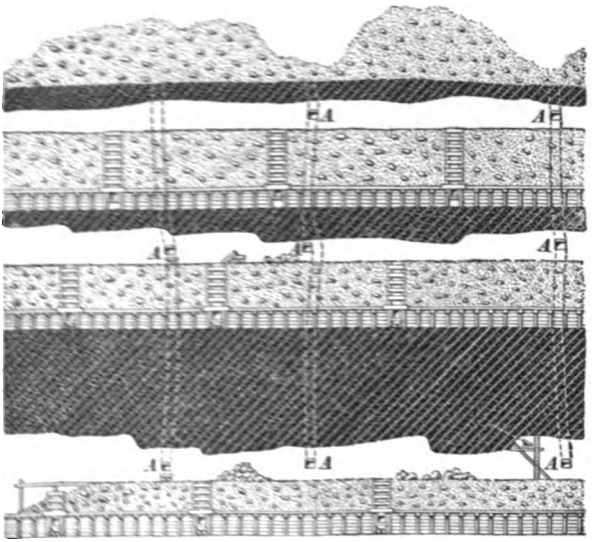

FIG. 24.

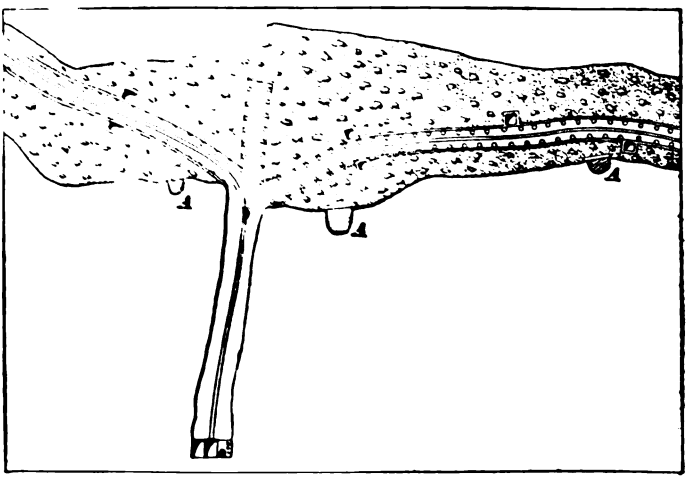

FIG. 25.

in, after which the stope is ready for blasting once more. The work continues in this manner until all the ore has been

removed to within a few feet of the next level above. No timbering is used during this work, except in the drifts at the bottom of each level and in building the cribs for the chutes. The chutes are placed about 30 feet apart, so that the miners do not have to handle the ore any more than can be avoided in getting it into the cars. When a stope has been worked out nearly to the floor of the one above, it is filled and left until work is suspended on the next upper level, when the ore left as a floor between the two levels is recovered from drifts driven in the foot-wall and opposite the floor to be removed, as shown at *B*, Fig. 23. The floor usually caves down upon the filling, and as a consequence a little timbering has to be used during its removal, but on account of the broken and shattered condition of the ore

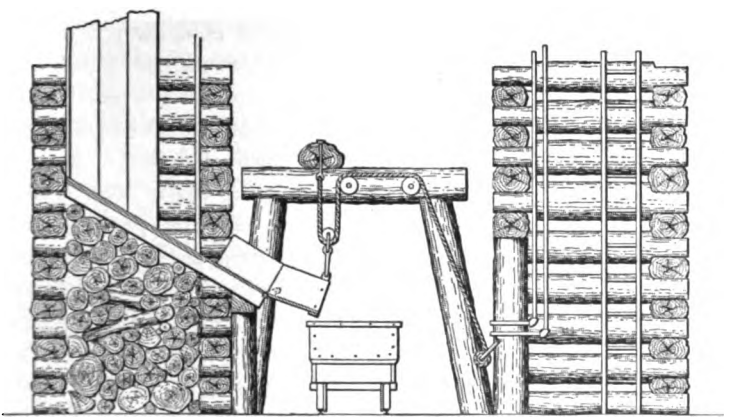

FIG. 26.

and the fact that little or no blasting is required, the product per man may be greater than in the largest stopes. After a level has been entirely worked out and the floor above robbed, the rock filling may be drawn from it and used to fill the lower levels. Fig. 26 shows the arrangement at the bottom of the chutes. It will be seen that there is a special iron spout, so placed that by lowering it any material in the chute will slide into the car, while the flow of material can be stopped by raising the spout. In case the lining of the chute becomes so badly damaged that it would require

renewing, it is possible to convert one of the ladderways into a chute, and thus avoid having to reline an old or worn chute.

63. When this system of overhead stoping with filling is used, the stopes are sometimes worked in steps. That is, the first cut is carried forwards some distance, the drifts and chutes timbered, and the filling put in. After this, the first cut may be advanced still farther, the material being trammed back through the timbered drift. At the same time, the second cut is started and the material thrown down through the crib chutes. After both of these steps have advanced some distance, the timbering in the first cut may be continued and the filling on both steps or levels will continue. In this way the work progresses in benches, as in overhead stoping. The filling material is drawn from the chutes into a car, the box of which is so pivoted as to dump either forwards or to the right or left. In this way practically the entire filling can be put in with only one setting of the track over which the car passes. That is, the material dumped to the right and left of the track will fill to the walls, and the material dumped in advance of the track provides for the continuation of the work.

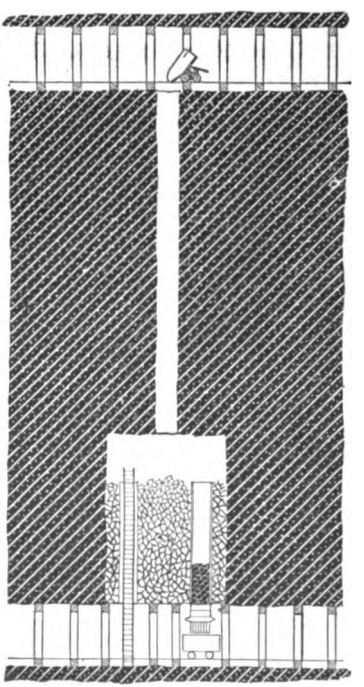

FIG. 27.

64. Transverse Rooming with Filling. —In both the filling systems so far described the ore is removed in horizontal slices. There is another system which has been but little

used in the United States, mainly on account of the fact that the mines attempting to use it did not have a sufficient amount of cheap filling material at hand, and the ore brings such a low price per ton that it does not pay to quarry the filling material and tram it to the stopes especially for filling. Fig. 27 illustrates a method which was introduced at the Chapin mine in Michigan. It consists in mining a room 20 feet wide and clear across the deposit. This room was carried up to the next level above, the stopes excavated being filled with rock dumped down through the winzes, as shown in the illustration. Two mills were cribbed up in the filling, one for a ladderway and the other to run the ore down through. After the rooms had reached the upper level, the pillars between them were drawn in the same manner, but the ore in this mine was a rather soft hematite, and hence had to be mined very quickly or caving would set in, which would render timbering necessary. The expense of quarrying and transporting the material for filling, together with that of building the cribs and keeping the drifts open, has forced the abandonment of this method among the hematite iron mines of the Lake Superior region, though there is no reason why it could not be applied to deposits of material having a slightly higher value per ton. As used at the Chapin mine, this system was applied only to locations where there had been no settling of the material. In removing the pillars from the upper portion of the mine and the bodies of ore which had been undercut in the previous work, a system very similar to that described in connection with the Spanish copper mine was employed. Cross-cuts were run through the pillars to the hanging wall, and from these drifts or stopes were run right and left, using light timbering to support the material. When these drifts were completed, they were filled and other drifts run beside them. This process was continued until a slice had been removed from under the entire pillar or body of ore being worked. After this, a new cross-cut was driven on top of the filling and the process repeated.

65. Advantages of Filling System.—The advantages of the filling system may be stated as follows: (1) The entire deposit is removed. (2) Several levels can be operated at the same time. (3) If operations are being carried on at a considerable depth, there will be little or no caving or disturbance of the surface of the ground. (4) Little or no timbering is required.

66. Disadvantages of Filling System.—The disadvantages of the filling system may be stated as follows: (1) The quarrying and handling of the filling material are always expensive. (2) If the filling material is taken into the mine in cars, the capacity of the shafts will be reduced, or special shafts will have to be provided for that purpose. (3) Where the filling material is allowed to fall through the chutes, it will require an extra handling into the cars in the mine; besides, the chutes will have to be kept in repair.

67. Character of Filling Material.—In all the filling operations as carried on in the Lake Superior region of the United States, the filling material has been coarse and fine, just as it came to hand, and in most cases no attempt has been made to carefully pack the filling material up under the roof, as was done in Spain. In some cases the mines have been filled with sand or gravel from the surface. Where special systems of timbering are used (such as square sets) to support the workings, the stopes or rooms are often filled with material after they are completed and the pillars removed by timbering and filling. In many cases this is not, strictly speaking, a filling system, but is practically a means of disposing of waste material underground without the necessity of hoisting it to the surface.

68. Method of Obtaining Filling Material in Western Silver and Copper Mines.—In many of the Western silver and copper mines, the stopes have been timbered and subsequently filled. The material for this filling is often obtained by simply running a drift into the hanging wall of the deposit and timbering it securely. When the drift has penetrated the hanging wall for some distance, a

chamber is stoped and the material allowed to cave and fill it. As fast as this material caves it is drawn out and used in filling the old mine workings. When the hanging wall is composed of a somewhat friable rock, this method has proved very successful and has furnished filling material at a very small cost per ton and at a point very near to the place where it was to be used. This method of filling is really not a purely filling system, as the ore itself was extracted by means of timbering, the filling being used only to support the walls while the pillars are being removed. The ore from the pillars is also extracted by timbering.

69. Caving System of Mining.—In coal mining a system of caving, or allowing the roof to settle after the coal was removed, has long been in use. The long-wall system of coal mining is really a system in which the roof is allowed to cave, the entire deposit being removed. When the coal seam is thin and at some distance from the surface, the caving will affect the surface very little, if at all, but when it comes to dealing with masses of ore (the dimensions of which may run into hundreds of feet), by allowing the overlying strata to cave and fill the opening, it is evident that the surface will be badly disturbed by this action. In the United States attempts were first made to fill the rooms mined out and then draw the pillars, or a portion of the deposit was worked out and timbered. Then, after this timbering had been crushed and the roof came down upon the formation below, more of the ore could be removed by timbering as before. The methods of caving now in use have been the results of many experiments, and they are by no means all alike.

70. Caving Roof or Gob Only (North of England System).—The caving system as originally introduced in the United States was that used in the north of England, and consists in the removal of the material from immediately below the top of the deposit. The top is then allowed to cave into the workings and another slice is removed farther down. It will be seen that in this method the miner

always works under a roof of broken material or gob supported by light timbering. Conditions have developed another system which is exactly the reverse of the one just mentioned. In this, the miner goes some distance from the top of the ore and undercuts or undermines it, after which the material breaks down of itself and slides or falls into the workings, and so is removed with little or no blasting. Between these two extremes there are many intermediate systems.

71. Fig. 28 shows a gang of men driving a drift through soft ore at the top of a formation, previous to starting a new slice in the caving system. It will be seen that the sides are not fully lagged, but that just sufficient lagging is

FIG. 28.

put in place to keep the drift open while it is being driven. After the drift or stope has been completed, the floor is covered with planking or lagging, as shown in Fig. 29, and the timbering is removed or blasted down so as to allow the roof to cave in and fill the space; the lagging on the floor forms a support for the material from above, and in

subsequent operations at a lower level, the rock and waste material are kept out of the workings by simply supporting this old timber floor. Figs. 30 and 31 show caves of material after the rock has fallen. The general arrangement of drifts and levels as employed in connection with this system of mining can be seen by examining Fig. 32. As originally laid out, the main levels connected with the shaft are usually about 100 feet apart, and upon these levels haulage drifts are driven through the ore, as shown at *D*.

FIG. 29.

When the ore above any level has been removed, the drift on this level is abandoned and the block of ground between it and the next lower level worked. The method of working is as follows: Drifts *A*, *A* are driven to the walls of the deposit from, at, or near the top of the raise *C*, and from them other drifts *B*, *B* are driven and lightly timbered, as shown in Fig. 28. The size of these drifts depends largely upon the character of the ore, and it may be taken as about $8' \times 8'$ in the clear. After this the floors of the drifts *B*, *B* are covered with lagging, as shown in Fig. 29, and the drifts or subs *B*, *B* are caved. This operation is repeated until the entire slice of ore is removed.

FIG. 30.

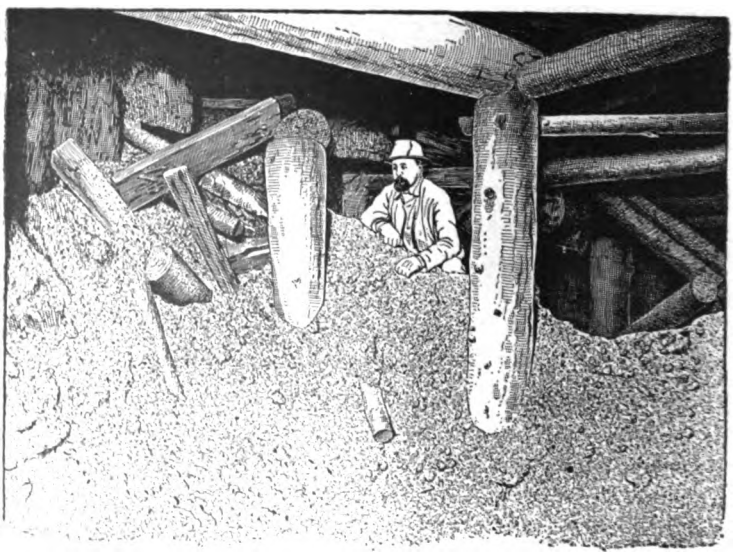

FIG. 31.

In Fig. 32 (*a*), which is a plan through the top of the raise *C* and the drifts *A* and *B*, two drifts have been caved on one side of the deposit and three on the other, and two others, one on each side, are ready for caving. Sometimes

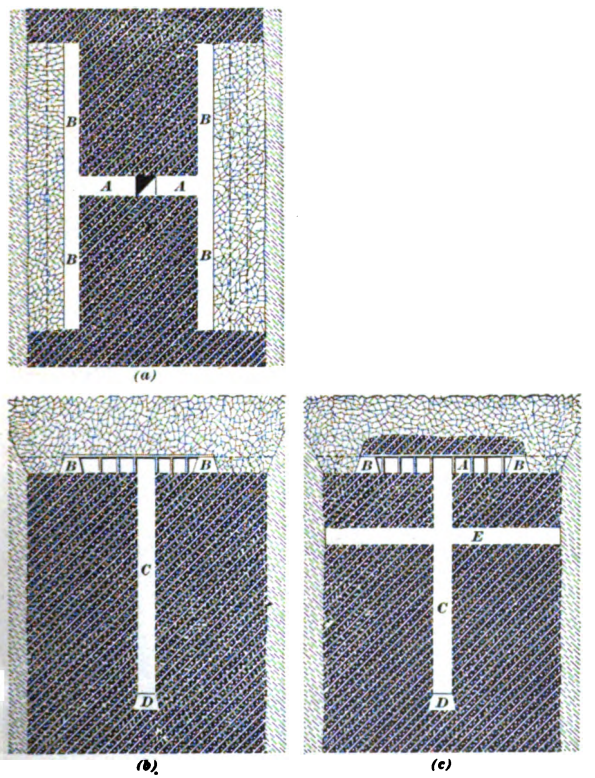

FIG. 32.

the raises are placed very much closer together and the drifts *B* are made very short. By this means a large proportion of the ore can be shoveled into the raise without the use of a wheelbarrow.

72. Caving a Back of Ore.—In some cases where the ore is of a somewhat harder nature, a slight modification of this system is used, and in place of driving the drift *A* at the top of the portion of the deposit to be worked, it

is driven several feet below. The drifts *B* are on the same level, and hence under some ore which is allowed to cave to the miner as he works back towards the raise. After one of the side drifts has been caved, the work progresses, taking off successive subs until this entire slice of the deposit is removed. Fig. 32 (*c*) illustrates this method of working. *D* is the main working level, which has been driven through the ore; *C* is the raise; *A* is the upper sub drift, from which caving is being carried on; *E* is the next lower sub drift, which has been driven preparatory to caving the block between it and the level *A*, after the upper slice has been removed. This method of operating does not produce quite as clean ore as the one previously described, on account of the fact that more or less gravel or waste rock becomes mixed with the ore during caving.

73. Example of Caving a Back of Ore.—Figs. 33, 34, and 35 illustrate the method of laying out a mine for the caving system just described. Fig. 33 is a vertical section

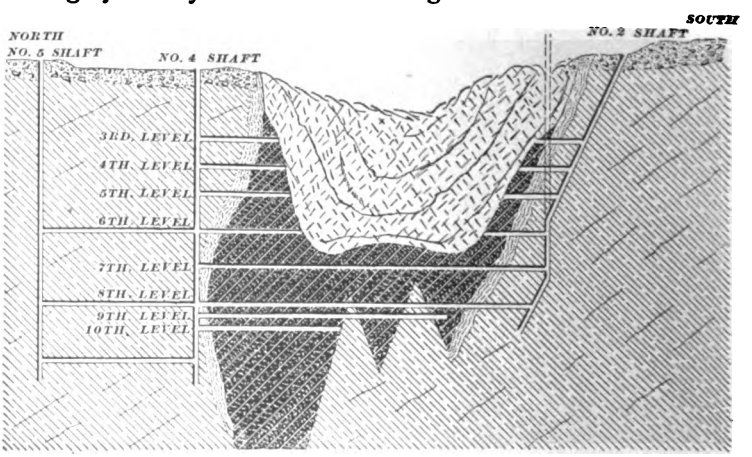

FIG. 33.

on the line *A B* in Fig. 35. Fig. 34 is a vertical section through the shafts No. 4 and No. 5, also on the line *A B*, Fig. 35. Fig. 35 is an outline of the ore-body as it appeared on the eighth level. All the shafts were originally vertical,

but as the caving progressed the upper portions of shafts No. 2 and No. 3 were carried away with the caving ground, and inclines were put down which intersected the old shafts at points below the caving. This can be seen in the case of shaft No. 2, Fig. 33, where the incline intersects the old

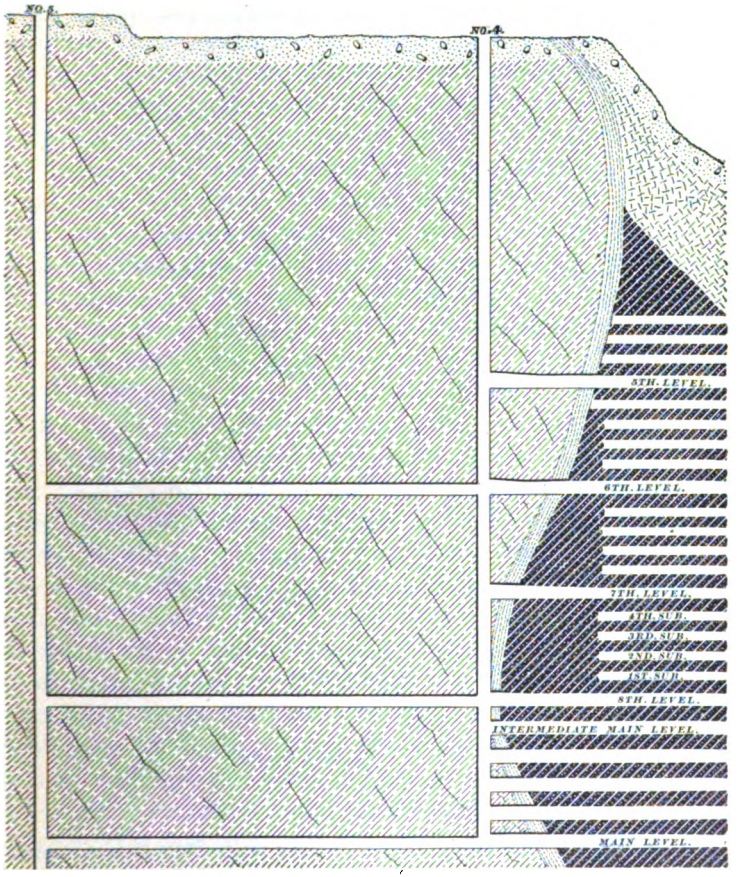

FIG. 34.

shaft between the fifth and sixth levels. In the upper portion of the mine, the main levels were driven 75 feet apart, and generally there were two main drifts at the bottom of each block of ore. From these main drifts raises were put

up at intervals of about 50 feet, and from these raises four series of sub drifts were run. The sets in the main drifts have 9-foot caps and 7-foot legs, while those in the sub drifts have 6-foot caps and 6-foot legs; this leaves about 8 feet of ore between the sub levels. The drift sets are put in from 3 to 4 feet apart. As the raises are put up, sets are

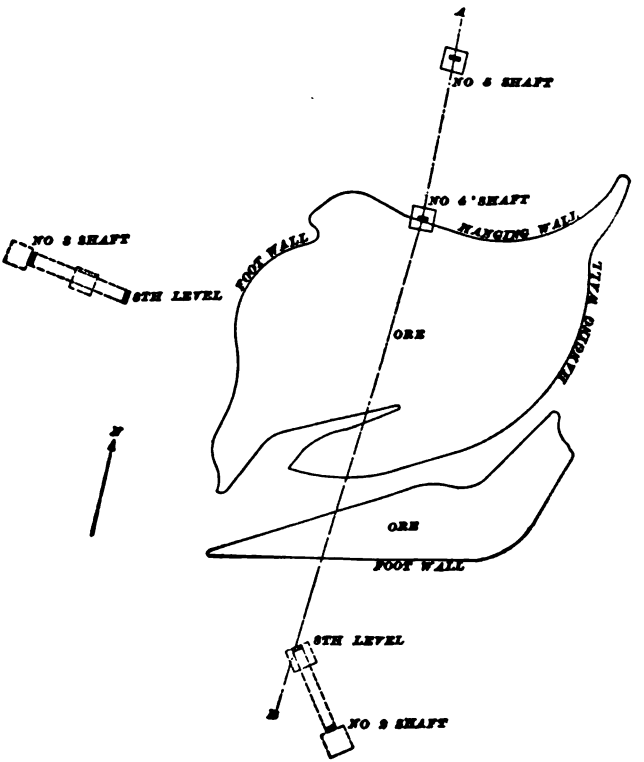

FIG. 35.

placed for the starting of the first sub drifts, but these drifts are not run at once, being omitted to strengthen the main drifts until the fourth, third, and second subs have been worked out. When the sub drifts are completed, the block of ore lying between any two levels is honeycombed with drifts with vertical intervals of 8 feet of ore. When mining above has been completed, the removal of the ore

pillars on top of the subs begins. The pillars are sliced away and the back caved as illustrated in Fig. 32 (*c*). The caved ore is removed in wheelbarrows to the chutes leading to the main level below. When waste rock or overlying timbers appear, a new slice is taken off and the ore caved as before, until finally all the ore above the level of the sub drift has been worked out, after which the operation of caving is continued on the next block below, which in the meantime will have been honeycombed by the sub drifts. There are two objections to this method of work: (1) The sub drifts are so close together that sometimes the crushing of the first sub above the main drift will crush the main drift. (2) The ore obtained on any sub level has to be handled twice, that is, with wheelbarrows to the chutes and subsequently in the cars to the shaft. A method which overcomes these difficulties is illustrated in the portion of the mine below the eighth level, which is laid out on a slightly different plan. What are called "intermediate" main drifts are driven through the ore at intervals of 20 feet instead of 75 feet, and no sub drifts are used. The intermediate main drifts are of the regular size, having 9-foot caps and 7-foot legs, which leaves about 10 feet of ore to be caved instead of 7 or 8 feet, as in the previous case. Stations are made at the shaft for each intermediate main level. Under this modified system, the removal of each 20-foot block of ore may be done as before, but the putting up of raises will be saved and cars can be used in the drifts, thus doing away with most of the wheelbarrow work. In some cases the broken caved rock and sand from the caving ground will become more or less mixed with the ore, and thus reduce its value, but as the ore is obtained very cheaply, it is thought that this may compensate for the injury to its quality.

74. Caving All the Ore Between Two Levels.— The idea of leaving a back of ore on top of the working level, which gradually caves and comes down to the miner with little or no blasting, has been carried farther and

farther until a system has been developed which is illustrated in Fig. 36. The deposit is divided by drifts and cuts into blocks of from 200 to 250 feet in length, which are worked as follows: A drift is driven in the hanging wall parallel to the deposit and usually about 20 feet from it. This drift is usually about 100 feet below the next level above. After all the material in the upper level has been worked out and the surface caved to this point, the block of

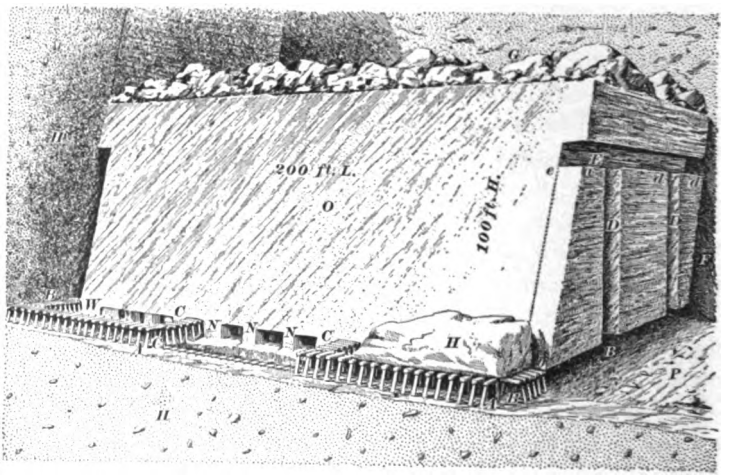

FIG. 36.

ore is attacked as follows: The cross-cuts *B*, *B* are run from the drift *A* through the ore deposit to the foot-wall, and from them two upraises *D*, *D* are driven nearly to the level above. The tops of the upraises are connected by the drift *E*, and after this has been done, the slice of ore *a b c d* is removed by underhand stoping for 8 feet along the deposit (as shown at *a c*); thus the ends of the large block are cut free from the adjacent material, with the exception of the portion left above the cross-cut *E*. While this work is going on, the cross-cuts *C*, *C* have been driven through the ore and the entire mass has been undercut to a height of 7 feet, leaving some irregular pillars to support the ore. After this work is completed, the pillars are reduced as much as is

consistent with the safety of the miners who are doing the work and are then blasted out. Fig. 36 illustrates the method of preparing a block of ore for caving. A portion of the hanging wall has been cut away in such a manner as to expose the timbering of the drift *A* and of the cross-cuts *B* and *C*, also the completed cut at the left-hand end of the block of ore; the small pillars supporting the ore can be seen at *N*, *N*. At the right-hand portion of the illustration the ore has been cut away in such a manner as to expose the cross-cut *B* and the raises *D*, *D* and the cross-cut *E*. The foot-wall can also be seen at *F*, and the continuation of the ore-body at *P*. *G* is the broken or caved ground above the ore. The entire block of ore breaks up and settles so as to fill the space resulting from the undercut. After several months, the material is usually broken so fine that the greater part of it could be put through a 3-inch hole. When this has taken place, the cross-cuts *C*, *C* are reopened through the crushed ore and they are strongly timbered. From these cross-cuts *C*, *C*, well-timbered drifts are driven to the ends of the block, and from the drift nearest the foot-wall, short drifts are driven to the foot-wall. The drifts in the caved ground are placed about 25 feet apart, and the ends or faces of the drifts are constantly full of broken ore, which slides down and into them. The work of mining is carried on by simply shoveling this material into mine-cars and taking it to the shaft. When a full output is desired, the force at any face consists of one miner and four shovelers; two of the shovelers are always employed in filling the ore, while the other two are tramming it to the shaft. No drilling is required, and but little powder is used in blasting. Drawing the broken material in this way forms funnel-shaped spaces in the broken ore, and these are eventually filled by the caving of the timber and waste material from above. When this waste material appears at any working face, the miner simply blasts a few timbers and draws ore from a point somewhat nearer the main cross-cut. This operation is continued and repeated until the ore in the territory formerly traversed by these drifts

has been exhausted and replaced by waste material from above, after which other drifts from the main cross-cuts are driven in pillars of ore which were left between the first drifts. In actual work it is found possible to draw the ore for 3 or 4 feet on the sides of these drifts, and consequently a second set of drifts practically cleans up the broken ground. After the ore has been removed, the caved material settles firmly into the place formerly occupied by the ore-body, then the adjoining block can be undercut and separated from the ore at its solid end, after which it will be allowed to cave and be removed in the manner just described. One of the advantages of this method of caving is that the output of a mine can be increased very greatly for a short time, that is, if there are a number of blocks of caved ground ready for work.

75. Safety of Men in Caving and Filling Methods.—All the caving and filling methods are comparatively safe methods of mining, for in the filling methods, the miner is always close to the back of the deposit, and hence knows the condition of the material over him. In the caving methods, the miner knows that the ground above is working, and hence only attempts to keep his passages open while actually employed in mining. After the caving has commenced, in some mines they remove the air-pipes and forbid the use of air-drills, on account of the fact that where they are used to cave the back of a formation, the miners are liable to drill too deep holes and to use such large blasts that they bring down more ore than they can handle, and hence lose control of the ground.

76. Rooming and Caving.—Owing to the fact that in the caving methods where a back of ore is caved, more or less of the waste material is bound to become mixed with the ore, and also to the fact that the caving method where only the waste is caved gives but a small output, some mines have adopted a compromise between the old system of room mining with square sets and the system of caving, and from this has been developed a system which has been employed

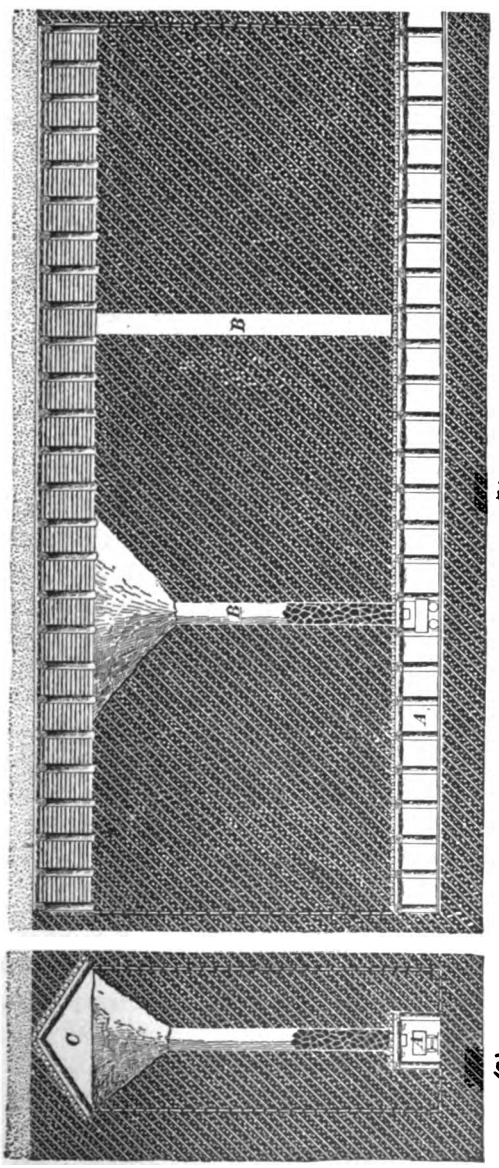

FIG. 37.

to some extent, in which the rooms are timbered with what are called "saddlebacks."

77. Stull Rooms or Saddleback Rooms.—An attempt has been made in some mines to lessen the amount of timbering necessary by using what are called "stull rooms." Fig. 37 (*a*) shows a cross-section or end view and Fig. 37 (*b*) a vertical longitudinal section through one of these stull rooms after the upper and lower drifts have been driven, but before the ore has been mined out. The drift *A* is driven something over 60 feet below the top of the formation. The raises *B* are then put up, and the large drift *C* is driven and timbered with saddleback sets as shown. After this the room is worked out to the dimensions indicated by the vertical dotted lines, the ore being milled down through the raises and trammed through the level below to the shaft. When the room has been worked out, the pillars may be attacked at the end farthest from the main drift. The pillars are usually attacked near the top, the ore being removed and replaced by light timbering. Work is continued until the roof shows signs of crushing, when the miners leave the working place while the roof crushes in and fills the rooms, together with the space left where a portion of the pillar has been removed. When the caved material has thoroughly filled the old workings, the pillars may be attacked by driving drifts through them to the end farthest from the main working drift, and then taking off subs from this inner end of the pillar, supporting the roof with light timbering until it shows signs of caving, when the men leave the work once more until the timber is crushed.

78. Height of Rooms Where Roof is Caved and Method of Recovering Pillars.—While the method of mining just described produces ore very cheaply in the stopes or rooms, there is danger of losing a portion of the high pillar. This remark applies equally well to high (7 to 9 set) rooms timbered with square sets, and on this account the working levels of mines in which it is intended to allow the roof to cave are being reduced. Rooms are frequently

driven but three sets high, and after they are completed (from 60 to 100 feet long), the pillars between the rooms are attacked at the end farthest from the main haulage drift, light timbering being used to support the roof. After several sets or subs have been removed from the inner end of the pillar, it will usually show signs of crushing, and then the miners blast the timbering which has been placed to support the roof while robbing the pillar, together with a a few sets at the inner end of the stope or room. The roof then caves in, and after it has become solid they drive a drift through the pillar and take off several more subs or sets. When it again shows signs of caving, they leave the work and return after the roof has filled the workings. This method of procedure is not as dangerous as it sounds, as when the work is done rapidly considerable advance can be made before a cave occurs, and the crushing of the light timber gives sufficient warning as to when the cave is coming.

79. Advantages of Rooming and Caving. — By this means the pillars are crushed and less blasting is required while robbing them. Also, practically all the ore in the mine is recovered with the use of very little timbering. When any portion of the deposit is attacked, the men should be crowded in as thickly as they can work and the work pushed as fast as it can be until there are signs of caving.

80. Disadvantages of Rooming and Caving.— The disadvantages of this method of working are that, as in the regular caving system, only the top of a deposit can be attacked, and that the surface is allowed to cave into the mine, thus necessitating the placing of the mining plant and buildings at some distance from the workings. The advantages are that the ore is obtained cheaply and comparatively little timbering is used.

81. Quality of Ore Obtained by Rooming and Caving.—By the method of working shallow rooms and then robbing the pillars with light timbering, comparatively

clean ore can be obtained, and in this way a better price may be obtained for the product of a good mine. This increased price frequently more than pays for the difference in the cost of working, that is, as between light timbering, with subsequent caving, and the method of caving a back of ore.

82. General Remarks as to Mining Methods.—No general rule can be laid down as to the best method for working large deposits, but the following remarks cover some points which must always be considered:

83. Surface.—If the surface is of value, the caving method is out of the question.

84. Character of the Ore.—The character of the ore will to a large extent determine the method of mining, for if it is extremely hard and breaks like quartz or hard iron ore, it may be impossible to employ any of the caving systems, which cave the ore rather than the material above it, and in such a case it would be necessary to use one of the filling methods, or to support the openings by means of square sets or some other form of timbering while the material is being removed.

85. Pillars of Low-Grade Ore.—When the ore contains bodies or portions which are of a considerably lower grade than the main portion of the deposit, pillars of this lean ore may be left to support the hanging wall or roof while the balance of the deposit is being removed. Some gold, silver, or copper mines are worked in this manner without the use of timbering, by simply leaving pillars of lean ore to support the roof.

86. Character of the Walls.—The character of the walls, and especially that of the hanging wall, will have an important bearing upon the method of mining, for if the hanging wall is composed of material which tends to form a natural arch (such as strong limestone), it is unsafe to attempt to cave the material under such a roof, as the roof

will arch for some time, and when it finally caves will crush everything before it.

87. Effect of Waste Material if Mixed with Ore.—Another important consideration in regard to the method of mining is: Would the value of the ore be materially reduced if it were to become somewhat mixed with the material from the wall-rock or with other waste material.

88. Timber.—The kind and quality of timber available, together with its cost, is also an important factor in all mining problems.

IRREGULAR DEPOSITS OF A MORE OR LESS "POCKETY" CHARACTER.

89. Posts and Breast Caps or Drift Sets.—Deposits of this character are usually mined by means of drift sets or by posts and breast caps. Fig. 38 is a section through

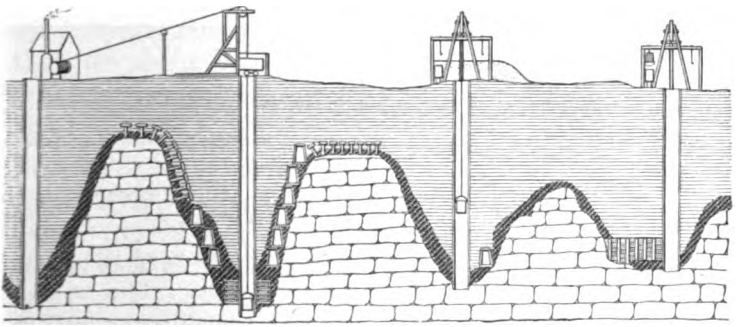

FIG. 38.

a zinc deposit, where the ore occurs on limestone under clay, the surface of the limestone being covered with projections (which are called chimneys) and the ore occurring not only in the hollows between these chimneys, but, as a rule, in uninterrupted layers of varying thickness over the entire surface of the limestone. The method of mining consists in the sinking of small shafts to the lowest part of the deposit. From these shafts, drifts are driven and inclined raises made to the tops of the chimneys. When the layer of zinc ore on the top of the chimney is not as thick as the

height of an ordinary drift set, it is mined by using posts and breast caps, as shown in Fig. 39. Fig. 39 (*a*) is a section showing the drift sets used at the sides of the chimneys, and the breast caps and posts used in working over the top. Fig. 39 (*b*) is a section on the line *A B*, Fig. 39 (*a*), and

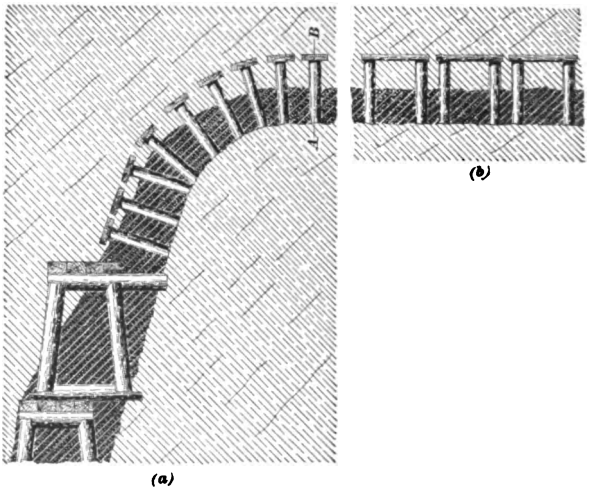

FIG. 39.

shows the manner in which breast caps are supported on the posts. The breast caps are simply slabs or pieces of plank, which are supported on posts and serve to keep the clay in position while the ore is being removed. The work of removing the ore begins at the top of the chimney and progresses, retreating down the sides towards the bottom of the shaft. On the sides of the chimneys and in the lower parts of the deposit, drift sets are used, and when the ore deposit is too thick to be removed by one series of drift sets, two or more

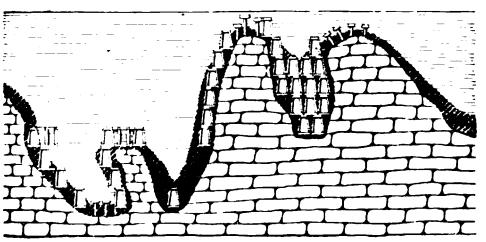

FIG. 40.

are placed side by side or on top of each other, as shown in Fig. 40. In this way the entire body of ore is removed, and any clay that is encountered in the drifts is simply used as stowing. Each shaft serves for working out a comparatively small area of the deposit, and in this way the length of the underground haulage is reduced. The underground drifts are very crooked, as they follow in and out among the limestone chimneys. The ore is brought to the shaft in specially constructed wheelbarrows, which have very deep boxes, and is hoisted in sheet-iron buckets. The workings from one shaft are continued until they encounter those from the adjoining shaft. The shaft linings employed are of a very simple character, and owing to the fact that the clay will usually stand in place for a short time without any support, it is possible to recover most, if not all, of the lining material when a shaft is abandoned. The greater part of the timber used in the drift sets is abandoned. Incandescent lights are used underground, on account of the fact that they do not vitiate the air as candles or oil lamps would, and hence the ventilation is much improved.

90. Drift Gravel Mines.—In working drift gravel mines, posts and breast caps or drift sets are usually employed, and in most cases it is not necessary to closely lag the top or roof of the opening. By placing packs or pillars made from the large stones at intervals, and by the use of a small amount of timbering, it is generally possible to remove the entire deposit.

SPECIAL METHODS.

91. Methods of Mining Deposits Having a Low Value Per Ton.—Salt and similar materials having a low value per ton have to be mined by the least expensive method possible; hence little or no timbering can be used.

92. Square Work Applied to Mining Salt.—Salt is usually mined by some modification of what is called "square work," or the chamber-and-pillar system. When a

deposit of rock salt is overlaid with wet formations, it is necessary to protect the deposit from the surface water, for if this is not done, the fresh water will very soon dissolve passages through the salt, thus causing the mine to cave. Hence, when mining in large masses of salt, the salt must be carefully secured against the influx of surface waters. After sinking a sufficient distance into the deposit, drifts

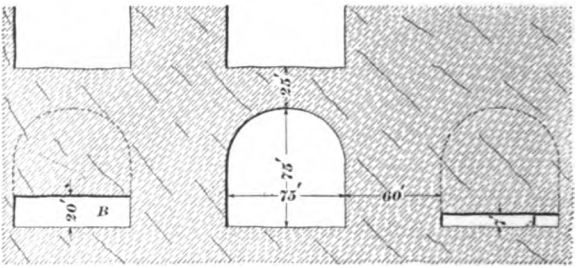

FIG. 41.

are run out from the shaft, and from these, chambers are started. The salt is usually worked by the undercut system, which is really a form of overhead stoping. Fig. 41 is a cross-section of a portion of a deposit being worked in this manner. Fig. 42 is a plan showing the arrangement of the pillars which are left to support the roof. First, an undercut *A*, Fig. 41, 7 or 8 feet high and the full width of the intended room or chamber, is driven for 200 or 300 feet. The salt is trammed out as fast as it is blasted down. After this undercut is completed, the roof is blasted down until the chamber is 18 or 20 feet high, as illustrated at *B*, Fig. 41. The salt is allowed to remain in the chamber for the men to stand upon while doing this work. The broken material is then removed, after which the men standing upon the platforms drill holes in the roof and blast down another layer. Then, standing upon shorter platforms, placed upon the salt already thrown down, they once more attack the roof. Owing to the fact that the broken material takes up more space than when in the solid, the chamber is soon so nearly filled that the workmen can

stand on top of the broken salt while attacking the roof. This is continued until the center of the room has been carried to the desired height. The chambers are arched at the top, as shown in the illustration. Before the broken salt is removed from the room, the miners carefully examine the roof to see that there are no loose pieces which might fall after the broken material has been removed, thus

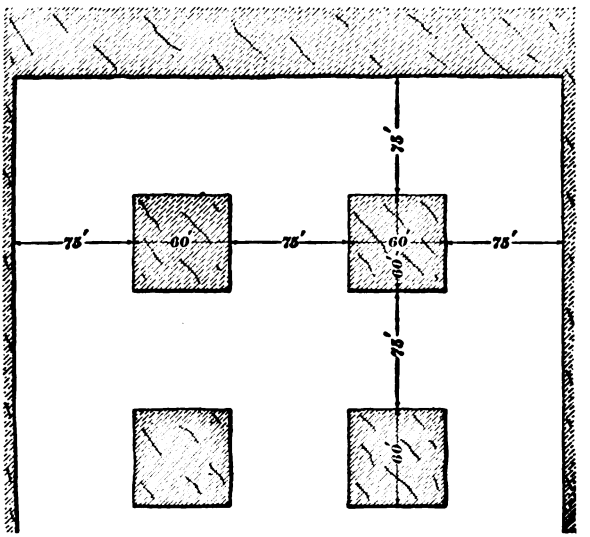

FIG. 42.

endangering the lives of the men working below. After the chambers have been driven in one direction, cross-cuts are broken through between them in such a manner as to leave pillars nearly as wide as the chambers themselves. Floors also have to be left between the top of the chambers and the next level above.

93. Portion of Deposit Recovered.—By the square-work method, scarcely half of the deposit can be removed, but the advantages are that no timbering is required and the material is broken down at a very small expense. After all the salt that can safely be removed by this means has been taken from the deposit, the mine must be abandoned,

but it can be allowed to fill with water, which soon becomes a strong brine. This can then be pumped out and evaporated.

94. The advantages of mining salt are that large masses and coarse rock salt, for which there is a demand, can be obtained in this way, and hence salt mines are always valuable, especially when the deposits are pure. Another advantage is that no extensive evaporating or pumping plant is needed when working rock-salt deposits by mining. One chamber 200 feet long, 75 feet wide, with a mean height of 65 feet, represents about 50,000 tons of rock salt; hence it will be seen that if the deposit is large, even this wasteful method of mining may produce great quantities of the article. When rock salt occurs as comparatively thin seams between firm rock walls, a greater percentage of the deposit may be mined with safety, and at times it may be necessary to use some timbering.

95. The chamber-and-pillar system of mining has also been applied to gypsum, copper ore, and other materials.

96. In all mining operations in salt deposits, it is of great importance that the formation shall not settle or cave in such a manner as to crack the overlying material, thus allowing fresh water to flow in on the salt. This mistake of working too close to the surface was made in the first salt mines in Louisiana. The result was practically a loss of the greater part of the deposit above the mine, for fresh water flowing in through the roof dissolved the salt and finally resulted in serious caves of the roof.

97. Square-Work, or Chamber-and-Pillar, System Carried to Great Depths. — When the chamber-and-pillar system is carried to a great depth, it becomes necessary that the lower pillars be of greater cross-section than the upper ones. The result is that on each succeeding level, less and less of the deposit is recovered, until ultimately a depth would be reached where it would be unprofitable to mine the small chambers, which could be left unsupported with safety.

98. Fig. 43 shows a cross-section of a deposit worked by the chamber-and-pillar system. It will be seen that the chambers are smaller and smaller, owing to the fact that

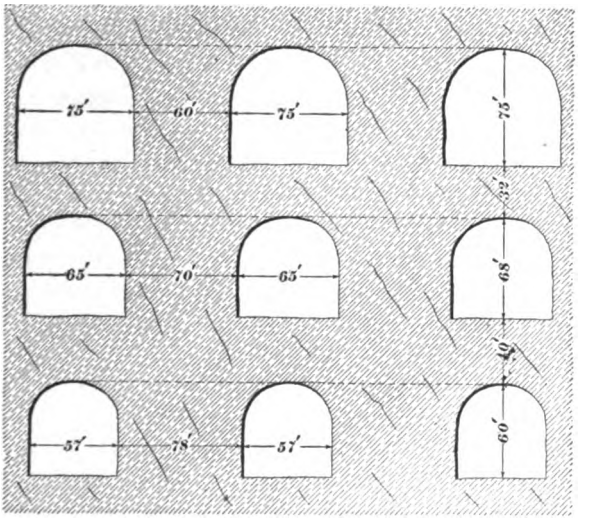

FIG. 43.

larger pillars have to be left on each succeeding level. The dimensions given in Figs. 41, 42, and 43 are not general, but would have to be varied to suit the particular case in hand.

99. Salt Mining by Undercutters.—Salt is also sometimes mined by using undercutters in the same manner that they are used in coal-mines. Where the seams of salt are between rock formations and are comparatively thin, the undercutter may remove the rock from below the salt, while where the deposit is very thick, the machine is used simply for making an undercut in the salt. Machines may also be used in driving the first undercut, as shown in Fig. 41, the machines making a low cut at the bottom of the deposit and the balance of the 7 or 8 feet being blasted down by drilling holes near the top and blasting.

100. Attempts to Remove the Floors and Pillars.—When the square-work system of mining is applied

to large bodies of ore, it is only possible to remove comparatively a small portion of the deposit, and hence attempts have been made to remove the floors and pillars left in the mine. In some cases the rooms have been filled and attempts made to remove the portion of the deposit still remaining, but when this is done it is necessary to resort to one of the other systems of mining—as, for instance, the filling system or the caving system. In the case of some of the large copper deposits in Spain which were worked by this method, it was found that less than half of the ore could be recovered, and hence after what material could be obtained by this method was worked out, the overburden was removed and the pillars and floors worked from open cut. In this case it would have been much better to have removed the overburden in the first place, but there may be cases in which the mine has to pay a greater part of the expenses as the work progresses, and as the removal of the overburden would have been very expensive at the first, the method actually followed may have been necessary.

101. Square Work Applied to Comparatively Thin Seams.—When this system of mining is applied to comparatively thin seams (not over 20 feet) which are situated between firm or hard rock, it may be possible to leave only pillars of ore in the mines, the rock forming the floor and roof of the openings. If the pillars and galleries are the same width, this method will remove practically eight-ninths of a vein; but, as has already been stated, when it becomes necessary to leave floors of the mineral, the amount that can be removed is very much less.

102. Leaching Salt.—Deposits of salt which are so located that it is impossible to mine them with profit may be worked by drilling a large hole into the formation and lining it with a casing; then a smaller pipe is let down inside of the outer one. The smaller pipe passes as close to the bottom of the hole as possible, while the outer lining or casing is usually stopped at or near the upper portion of the deposit. After this, water is allowed to flow down through

the annular space between the outer and inner pipes. This water dissolves the salt from the formation and a strong brine settles at the bottom, whence it may be pumped through the inner pipe. By this method a large amount of salt has been removed from some deposits, the brine being subsequently evaporated.

103. Leaching Sulphur.—In some locations there are sulphur deposits at some distance from the surface and so located that regular mining methods would be practically impossible, on account of the soft and treacherous nature of the ground. Attempts have been made to work such deposits by putting down pipes similar to those used for leaching out salt deposits as described above, but in place of sending down water, superheated steam was used to melt the sulphur, which was then pumped out through the inner pipe. Considerable sulphur was derived from one deposit by this means, but for some reason the operators are not working it at present.

BREAKING GROUND (BLASTING).

104. Definition.—Rock blasting consists in splitting, loosening, or breaking rock by means of explosives.

105. Operations Necessary.—The operations necessary are boring or drilling a hole, inserting a charge of explosive (charging the hole), filling all or a portion of the remaining part of the hole with some suitable material (tamping or stemming the hole), and lastly, igniting or detonating the charge (firing the blast).

106. Effect of a Blast.—The effect of a blast is as follows: The burning of the explosive forms a large amount of gas at a very high pressure and temperature. Owing to the tendency of heat to expand all gases and to the fact that the more rapid the burning of the charge the hotter will be the gases, it is evident that the more rapid the combustion the greater the resulting pressure or shock upon the walls of the chamber containing the explosive. If this

pressure or shock is greater than the resistance of the rock to disruption, the rock is loosened or thrown out, according to the strength of the charge.

107. Power of an Explosive.—The power of an explosive can not be calculated with precision from the quantity and temperature of the gases resulting from its detonation or ignition. This is mainly owing to our lack of knowledge as to the exact composition of the gases resulting at the moment of the explosion and during the subsequent period of cooling. In order that any explosive may develop its full force, it is necessary that it be transformed into gas as rapidly as possible.

108. Detonation.—A large number of explosive compounds are not transformed into gas rapidly unless detonated. In other words, the explosion must be caused by means of a heavy blow and not by simply setting fire to the charge. This blow is usually caused by the explosion of a detonator or cap containing fulminate of mercury.

109. Force of an Explosion and Its Value as a Blast.—The force of an explosion and its value as a blast for breaking rock is affected by the following conditions: (1) The absolute quantity of the gases produced by the explosion and their temperature. (2) The expansion of the gases due to their temperature. (3) The time occupied in obtaining the maximum pressure. (4) The size and form of the chamber or opening containing the explosive. (5) The ability of the rock to absorb heat from the gases as they are being evolved. (6) The structure of the rock, as to whether it is laminated, stratified, or fissured, and the position, direction, and number of joints or cracks. (7) The character of the fuse and tamping. (8) Whether the blast is to act alone, or simultaneously with, or following, others. (9) The direction of the line of least resistance; that is, whether the blast is acting against, with, or parallel to, the force of gravity. (10) The specific gravity of the rock.

110. Form of Cavity.—The form of cavity produced in homogeneous rock by blasting depends on the form of chamber containing the explosive. For instance, if a circular chamber contains the explosive, the crater formed by the blast would be the frustum of a cone, while if the chamber were square, the crater would approximate the frustum of a pyramid. Of course these results vary greatly in appearance, owing to the joints, fissures, and other irregularities of rocks, or through there being more than one free face exposed.

111. The Resistances To Be Overcome by the Blast.—These may be divided into the two following resistances: (1) The resistance due to the strength of the rock and its ability to resist being torn apart. (2) The resistance due to the weight of the mass of rock and to the friction between the parts as the rock is forced from its bed.

112. Amount of Explosive.—Various formulas have been derived for figuring the amount of explosive necessary to produce a given amount of rupture under given conditions, but it is usually very difficult to apply these formulas in the practical work of metal mining, on account not only of the variations in the character of the rock blasted, but also on account of the varying relations of the holes to the free faces and joints available. Experience, assisted by a general knowledge of the laws of physics and mechanics, furnishes the best guide for determining the size of charge to be used in ordinary mining work.

113. Character of Explosive.—The character of the explosive to be used also depends upon the physical characteristics of the rock being mined.

According to their properties, explosives may be divided into two classes:

1. Low, or slow and rending.
2. High, or quick and shattering.

114. The former are those in which the gases are evolved comparatively slowly, and hence the pressure in all

parts of the chamber containing explosive is practically uniform. This may result in opening cracks in the rock, into which the gases expand in such a manner as to gain a greater area upon which to work, and acting upon this greater area, they throw out or rend the rock being blasted. Gunpowder is the best example of this type of explosive.

115. The latter class of explosives contain those which are transformed into gas practically instantaneously, and the full force of the enlarged volume of gas is immediately exerted in all directions and upon every part of the containing body. Even if such an explosive should form cracks in the rock, the gases would not have time to expand into them before the entire volume had been evolved, and the result is that the pressure being brought upon the chamber so suddenly acts as a quick and heavy blow from a hammer, and hence has a tendency to shatter or powder the rock; or, expressed in other words, motion requires time, and as no time is given for the less resistant part of the surrounding body to yield before the full pressure of the gases is developed, it follows that the full force of the explosion is exerted in all directions and with equal force.

Nitroglycerin and guncotton are the best representatives of this class of explosives. Between nitroglycerin and gunpowder, as extremes, the other explosives range according to their strength, and their value for rock blasting depends on the nature of the rock and as to whether the rock is to be shattered or broken into large blocks.

116. Pressures Developed by Explosives.—According to the experiments conducted by Sarrau, Vielle, Noble, and Abel, the following approximate maximum pressures developed by various explosives have been arrived at:

Mercury fulminate.....	193 tons per sq. in.
Nitroglycerin.....	86 tons per sq. in.
Guncotton.....	71 tons per sq. in.
Blasting-powder.....	43 tons per sq. in.

117. Useful Work Performed by Explosives.—The useful work performed by explosives, which consists partly in shattering and partly in displacing the rock masses, does not approach the theoretical values, on account of the incomplete combustion of the ingredients making up the explosive and the escape of the gases at a high pressure through the holes or fissures caused by the explosion; besides, the ability of the surrounding material to absorb heat from the gases has a great effect upon the value of the explosive. According to von Rziha's experiments, the useful effect is only 13.7% of the theoretical effect.

118. Values of Explosives.—Taking gunpowder (containing 61% saltpeter) as a standard, and calling its value 1, the following are the values of the other explosives:

Dynamite containing 75% nitroglycerin.....	2.2
Blasting gelatine containing 92% nitroglycerin.	3.2
Nitroglycerin.....	3.3

119. Laws of Pressure in Fluids.—The two following laws of physics are of use in considering the effect of explosives:

(*a*) The pressure exerted by a fluid upon the different parts of the walls of the containing chamber is proportional to the areas of those parts.

(*b*) The pressure exerted by a fluid in any direction upon a surface is proportional to projection of the surface at right angles to the given direction.

120. Comparative Effects of Blasts.—Since rock is invariably an inelastic body, whose limit of elasticity is reached when it has undergone very slight extension or change of form, it is evident that by the explosion of a charge in a chamber in the rock there would be no appreciable enlargement of the chamber before rupture takes place.

121. Therefore, if M denotes the maximum pressure or shock per unit of surface in the chamber due to the explosion, and A and A_1 projections of two chambers at right angles to the direction of the rupture, we can put P and P_1

for the absolute forces or pressures acting in the direction of the rupture,

$$P = MA, \text{ and } P_1 = MA_1,$$

whence

$$\frac{P_1}{P} = \frac{A_1}{A};$$

that is, the forces are directly proportional to the area of the projections; hence, for the use of the same explosive compound, the projection of the chambers at right angles to any lines of resistance may be taken to represent the relative forces which will be developed by the explosion of charges filling the chambers.

122. This point may be illustrated by reference to Fig. 44. If $C\,D$ is a free face of rock and it is desired to drill a hole and fire a blast so as to break into the face, the question

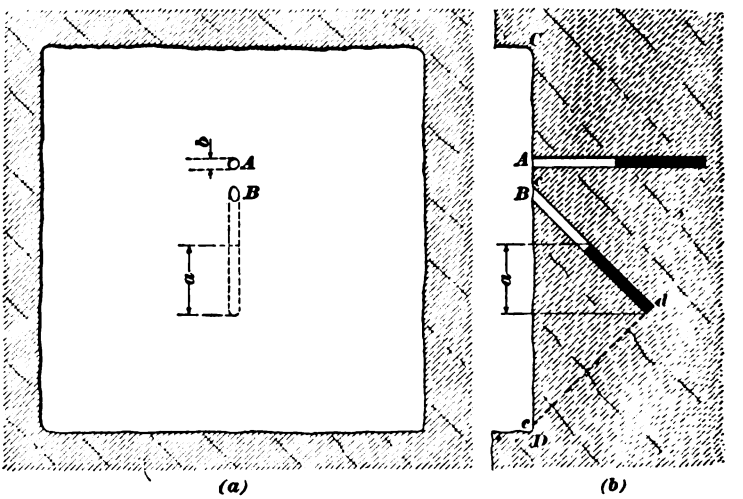

(a) (b)

FIG. 44.

naturally arises: At what angle will the hole break best? If the hole were drilled as at A, and loaded with an explosive for half of its length, the remainder of the hole being filled with tamping, it is evident that the only surface of the chamber containing the explosive which is directly presented to the free face $C\,D$ is the area of the circle whose

diameter is *b*, as shown at *A*, Fig. 44 (*a*); hence, if the explosive developed its pressure slowly, as in the case of black powder, the maximum force exerted towards the free face *C D* would have a tendency to force out the tamping, or cause a pop shot. If the hole had been drilled as indicated at *B* and charged in the same manner, it will be seen that were the area of chamber containing the charge to be projected on to the free face *C D*, there would be an area having a length of *a* and a width of *b*. This area is much greater than the area of the diameter of the hole, hence there would be a greater pressure exerted towards the free face than that exerted upon the tamping. This is the reason that angling or inclined shots break best. If the holes had been loaded with a high explosive, as nitroglycerin, the effect might have been practically the same in either case, for, as has been stated before, the high explosive would have a shattering effect, which would first enlarge the chamber, and after this the gases, acting in the enlarged chamber, would throw the material towards the free face. Blasts charged with black powder rarely, if ever, break deeper than the bottom of the hole, while blasts charged with nitroglycerin may break considerably beyond the end of the hole.

123. Maximum Pressure an Explosive Can Produce.—By experiments it has been proved that the maximum pressure or effect which any explosive substance can develop is that when detonated or exploded in a space which it entirely fills, that is, in a space equal to its own volume; hence, to obtain the greatest effect from a blast, the charge should entirely fill the containing chamber.

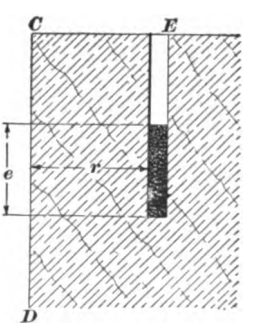

FIG. 45.

124. Most Efficient Position in Which to Drill a Blast-Hole.—The most efficient position in which to drill a hole for blasting may be

determined by an inspection of Figs. 44 and 45. In Fig. 44 (*a*) and (*b*), the holes *A* and *B* have been drilled into a free face. In Fig. 45, the hole *E* has been drilled parallel to a free face. If all three holes were the same size and the charges of explosive occupied the same proportion of each hole, their relative efficiencies in regard to breaking would depend upon the pressure each hole would exert towards the free face. In the hole *A*, Fig. 44, we have seen that the projected area of the powder charge towards the free face was simply the area of a circle whose diameter is *b*. In the case of *B*, we have seen that the projected area of the powder charge towards the free face was a rectangle of the length *a* and the width *b*. In the case of *E*, Fig. 45, the projected area of the powder charge towards the free face *C D* will be a rectangle whose length is *e* and whose width is *b* (or the diameter of the hole). As *e* is the length of the powder charge, it is evident that no greater projected area could be presented towards any free face, and hence, if the line of resistance *r* were the same in all three cases, it is evident that the hole *E*, Fig. 45, occupies the most efficient position possible, and the hole *A*, Fig. 44, the least efficient position possible.

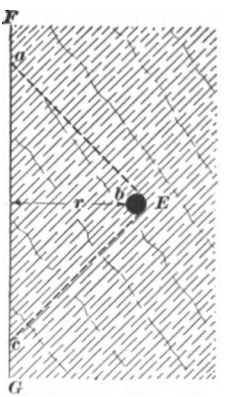

FIG. 46.

Fig. 46 is a plan of the blast-hole *E* shown in Fig. 45. The angle *a b c* shows the shape of the mass of rocks which would be ejected from such a blast with the use of black powder. High explosives, such as nitro-glycerin, might possibly break somewhat deeper than the original hole *E*.

When employing black powder in blasting, the maximum which can be expected from any blast would be to throw out the triangle of rock *c d e*, Fig. 44 (*b*), from the blast-hole *B*, but in practice, when only single shots are fired, the amount of rock is always less than this, the line actually broken towards the free face always falling between *c* and *e*.

125. Relation of Diameter of Hole to Line of Least Resistance.—It is evident that if the diameter of the hole *b* remained the same, and the line of the least resistance *r*, Fig. 45, were increased, we would soon reach a place where the charge of explosive would fail to break out the rock before it. In order to increase the effect of a charge towards any free face, we must increase the projected area of the powder charge in that direction. It is not considered good practice to have a powder charge occupy more than one-half of the hole; hence, in order to increase the projected area of the powder charge, we must increase the diameter of the hole. From this it will be seen that as the distance *r* increases, the diameter of the hole *b* must be increased; or there must be a chamber formed at the lower end of the hole in which the powder charge is to be contained, so as to increase the projected area of the charge towards any free face. This chamber is sometimes formed by using some form of expansion bit or reamer, but the usual custom is to introduce a small charge of high explosive, the firing of which will simply enlarge the end of the hole, as shown in Fig. 47, *a* being the chamber in the hole *b*. By continuing this process, an opening of sufficient size to contain the desired charge may be formed. This operation is called chambering or squibbing, and by some this style of blasting is called "kettle" blasting and the chamber is called a "kettle." Where large masses of soft material are to be loosened, it is common practice to use dynamite or nitroglycerin for chambering the hole and black powder for the blasting. Holes are sometimes drilled as much as 20 feet deep and several kegs of powder introduced into the chamber formed by firing the high explosive. This method of blasting is used in the open-cut ore mines and in the milling and steam-shovel mines.

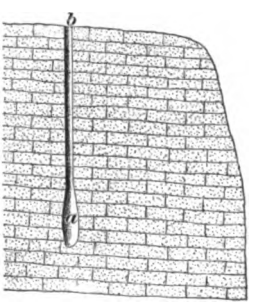

FIG. 47.

126. The Effect of Firing Several Holes Simultaneously.—Fig. 48 represents two drill holes *h* and *h'* drilled

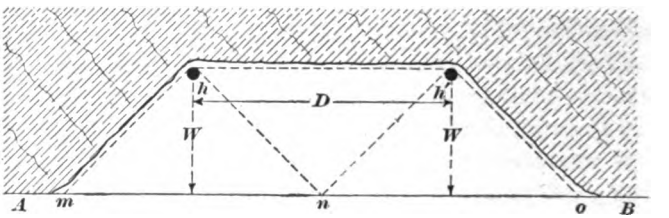

FIG. 48.

at a distance *W* from the free face *A B*. If these holes were fired independently, each would break out approximately the same amount of material, as *m h n* or *n h' o*. If they are fired together, and the distance *D* between them is not too great, they will bring out the entire mass *m h h' o*. It will be seen from this that by firing two holes together an additional amount of rock *h n h'* has been broken with the

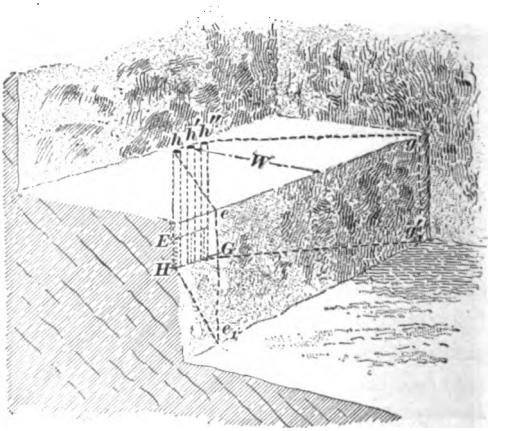

FIG. 49.

same amount of powder required to break the two masses *m h n* and *n h' o*. The distance *D* between the holes has been found to vary according to the character of the rock. In comparatively soft material it is less, and in hard rock

greater. Fig. 49 illustrates another case. Here three holes h, h', h'' have been drilled close together, and each one loaded with a charge the depth of which will be represented by $H\,E$. Any one of the holes, if fired separately, would not be able to break through the distance W, but by firing the three together, the mass $e\,h\,h''\,g\,g'\,G\,H\,e^1\,e$ may be removed at one shot. By this means greater masses of rock can be removed with smaller drilled holes than would be possible were it not for the combined effect of the several charges.

127. Relation of Diameter of the Hole to Length of Charge.—By experiment it has been proved that, as a rule, the length of the charge of explosive for single holes should not exceed from eight to twelve times the diameter of the hole; that is, a 1-inch hole should never have a charge of more than 12 inches of explosive placed in it. Where several holes are fired together, this rule is sometimes slightly deviated from. It is usually best to employ a length of charge between these two limits, as, for instance, about ten times the diameter of the hole.

128. Influence of Fissures or Joints and Bedding Planes on Blasting.—Fissures or joints and bedding planes, when open, have something the effect of free faces, and as a consequence they influence the best position for placing a blast. When possible, the charge of explosive should never be placed in contact with a fissure or bedding plane, but should be located in the firm rock, in order to avoid the escape of the gases through the fissure, thus reducing the effect of the blast.

129. Tamping or Stemming Shot-Holes. — The material used for tamping or stemming shot-holes should be of such a nature that it is not liable to strike fire while it is being rammed home; that is, any material containing quartzite or similar hard rock should be avoided. Clay slightly dried or brick-dust sufficiently moistened to make it adhere form the best tamping material for powder. A series of experiments carried out by Sir J. F. Burgoyne as to the best length of tamping to be used in the holes

resulted in the conclusion that 17 inches was the least amount that could be used in a hole 1 inch in diameter, 18 inches of tamping in a hole 2 inches in diameter, and not less than 20 inches of tamping in a hole 3 inches in diameter. His experiments were carried on with clay, brick-dust, and rottenstone, the explosive being blasting-powder.

130. Tamping for High Explosives.—Such explosives as nitroglycerin compounds, which develop their full power instantaneously, require less tamping than powder, on account of the fact that the shock is delivered on the sides of the chamber with sufficient force to burst the rock before it can have had any appreciable effect upon the tamping; hence, for such explosives very light tamping is used, as, for instance, filling the hole with water, or applying a few inches of clay, or a wad of paper.

131. Bulling Holes.—Sometimes when blasting in shattered rock with black powder or other low explosive, the powder gases have such a tendency to escape through the cracks existing in the material that they produce but a small proportion of the effect they should. To overcome these difficulties, a process called "bulling" is sometimes employed, which consists in the drilling or boring of the blast-hole and then working the clay into all the seams or cracks by means of an iron bar. After this has been done, the clay remaining in the hole is cleaned out with an auger and the charge of explosive introduced, stemmed and fired as though it were in solid rock, the clay which has been forced into the cracks serving to close them and thus render the blast more effective.

132. Different Arrangement of Bore-Holes for Driving and Sinking.—Where rock-drills are employed, it is important that the arrangement of holes should be such as to provide for easy handling of the machines in boring them; also, the number of holes should be made a minimum, in order to reduce the drilling expense and the expense for explosives. With this object in view, two distinct systems of holes for driving or sinking are used:

(*a*) The center cut, which consists of center holes surrounded by others more or less concentric and angled so as to allow the explosive to move, first, a central core, sump, or key; second, the rock encircling the core.

(*b*) The square cut, in which the shot-holes are mostly parallel to the side of the heading, level, or shaft, which is given a more or less rectangular form; the holes being angled so as to admit of the removal, first, of an entering wedge; second, of the rock on each side of the wedge. The core or wedge may be removed at the center, side, or bottom.

133. The Diameter of Holes.—In driving headings or sinking shafts, experience shows that holes having a diameter varying from ¾ inch to 1½ inches at the bottom are most economical in hard rock, if charged with the strongest high explosive. On the contrary, holes of large diameter, say 1½ to 2 inches in diameter, and charged with strong, low, and cheap explosive, are the best when operating in weak rock. All the holes in the heading or shaft should have the same diameter, and the best arrangement is to give an equal resistance of rock to each, and to so place each hole that it will receive the greatest benefit from the free faces formed by firing the previous holes.

134. The Advance in a Level Shaft or Heading.—In hard and tight rock the best distance for an advance with each set of holes may be taken at one-half the width or diameter of the heading, level, or shaft; but in soft and loose rock this may be increased to three-fourths the width or diameter. The arrangement of holes must enable the whole of the rock to be blasted away within the limits of the heading or shaft. If this is not the case, it will be necessary to set up a machine to drill holes for trimming the opening before the holes for the next advance can be put in.

135. Key Holes or Cut Holes.—The key holes should meet or intersect at the bottom and be fired simultaneously

to give the best effect, as the resistance of the core is a minimum under these conditions. When the holes meet at the bottom, the drill breaks up the rock at that point,

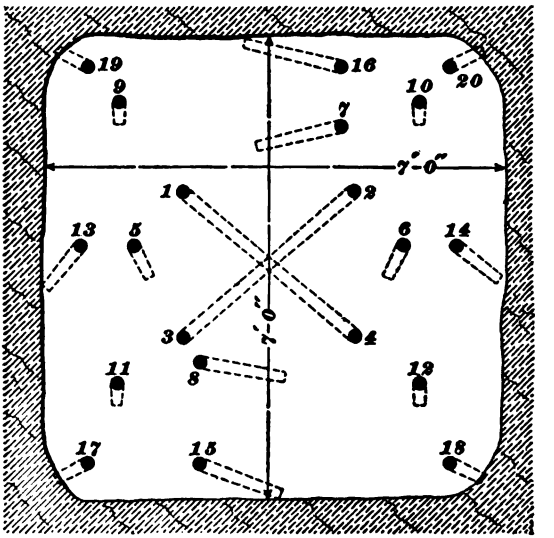

FIG. 50.

thus enlarging the opening and giving the gases of the explosion more surface to work upon. (See Figs. 50 and 51.)

136. Center Cut in the Heading.—Figs. 50, 51, 52, and 53 give an example of the placing of blasting holes of one diameter for the center cut in a 7′ 0″ heading. Fig. 50 indicates their position on the face of the heading, Fig. 53 in the elevation, and Figs. 51 and 52 in plan. Two plans are used on account of the fact that if all the holes were drawn on one view it would be confusing. The holes are shown as they would be drilled by rock-drills, and are so placed that the breaking line for all the holes save the first, or breaking-in holes, is the same. That is, all the holes have an equal line of resistance, except the first mentioned. Sufficient holes must be bored to enable the whole section of the rock *a b c d* to be removed, giving a lineal advance of 3 feet 6 inches. This

arrangement of holes enables the drills to be placed to the best advantage, and either two or four machines can be used in the same heading. The breaking-in holes are so drilled as to converge to a point in the heading, to insure the removal of the core or piece between them.

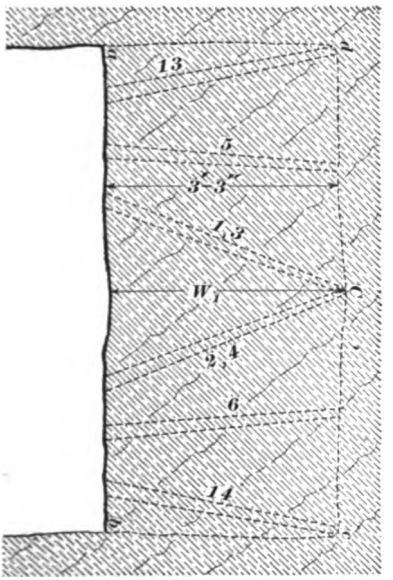

FIG. 51.

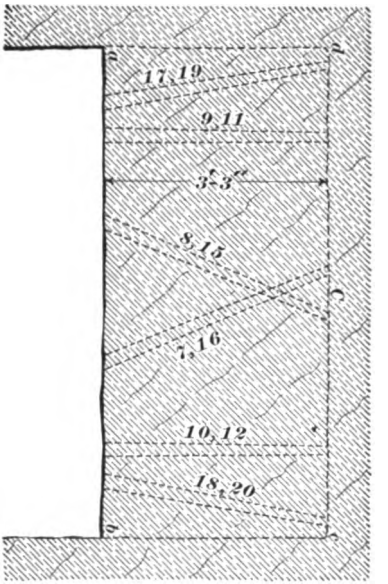

FIG. 52.

It is very difficult in practice to make the holes intersect, and for this reason four holes are employed, while only three would, theoretically, be sufficient to make the first opening. It is also somewhat easier in setting the machine to drill four holes than to arrange for the drilling of three. The order of firing holes is as follows: Breaking-in shots Nos. 1, 2, 3, and 4, simultaneously, then the enlarging shots, either simultaneously or consecutively (the result will be precisely the same), in the following order: First volley, Nos. 5, 6, 7, and 8; second volley, Nos. 9, 10, 11, and 12; third volley, Nos. 13, 14, 15, and 16; fourth volley, Nos. 17, 18, 19, and 20. This order gives each hole the full advantage of the free face formed by the preceding holes. It is

assumed in this case that the rock is fairly hard and homogeneous, but small joints or irregularities would not make any appreciable difference. In the case of weak or bedded rock, the lines of resistance would be greater, and fewer holes would be required. If holes $1\frac{1}{8}$ inches in diameter

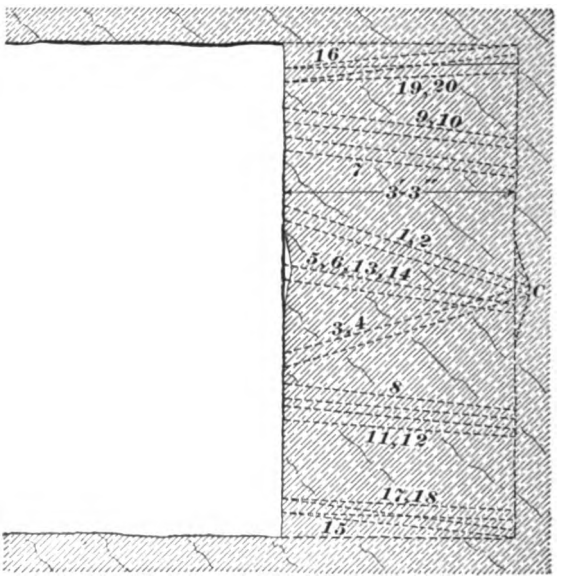

FIG. 53.

at the bottom were employed and all were loaded with 75% dynamite, about $\frac{3}{4}$ of a pound would be the charge required for each hole, and the total amount required for an advance of 3 feet 6 inches would be $20 \times \frac{3}{4}$ lb., or 15 lb.

137. Square Cut in the Heading.—Figs. 54 to 57 give an example of the placing of the shot-holes for a square cut. Fig. 54 illustrates the positions of the holes on the face of the heading. Fig. 57 is an elevation and Figs. 55 and 56 are plans. This system of placing the holes differs essentially from the center cut in that the first free face is developed for the entire length of the opening in place of central, as in the method already

described. Two or four drills can be used to advantage in drilling the holes for this arrangement. With strong, hard rock, the diameter of the holes will be about $1\frac{1}{8}$ inches at the bottom, but the four holes Nos. 1, 2, 3, and 4 would be somewhat shallower than the others. It will also be noticed that there are only three upwardly inclined or dry holes to be bored in this arrangement, as compared with five in the center-cut system. As the drill holes are

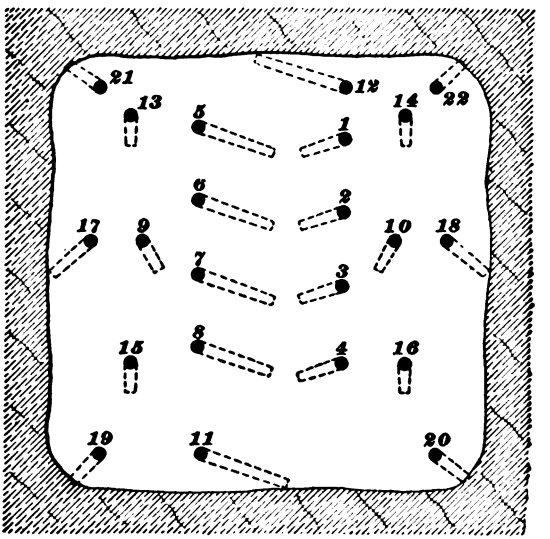

FIG. 54.

always slightly conical (owing to the fact that each succeeding drill is of smaller diameter than the preceding), the four shallower holes would be nearly, if not quite, $1\frac{1}{4}$ inches in diameter at the bottom. The entering wedge, Fig. 55, is best removed in two stages: First, the part *egh* by the breaking-in shots Nos. 1, 2, 3, and 4, and then the part *efh* by the breaking-in shots Nos. 5, 6, 7, and 8. The order of firing the shots is as follows: First volley, Nos. 1, 2, 3, and 4, simultaneously; second volley, Nos. 5, 6, 7, and 8, simultaneously; third volley, Nos. 9, 10, 11, and 12,

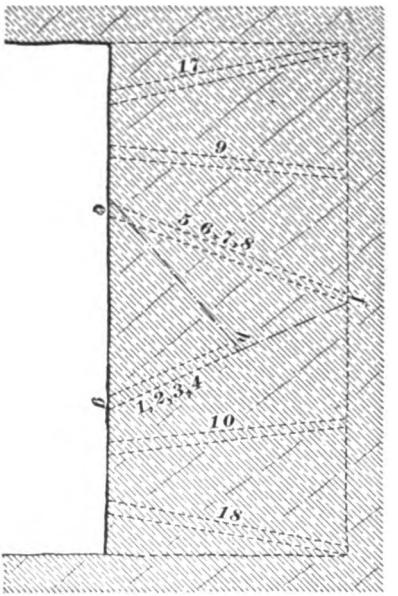

FIG. 55.

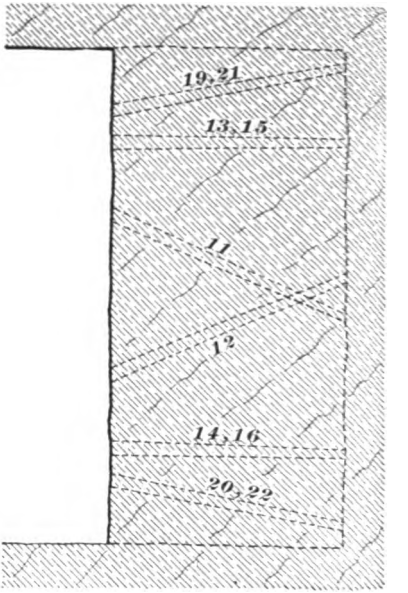

FIG. 56.

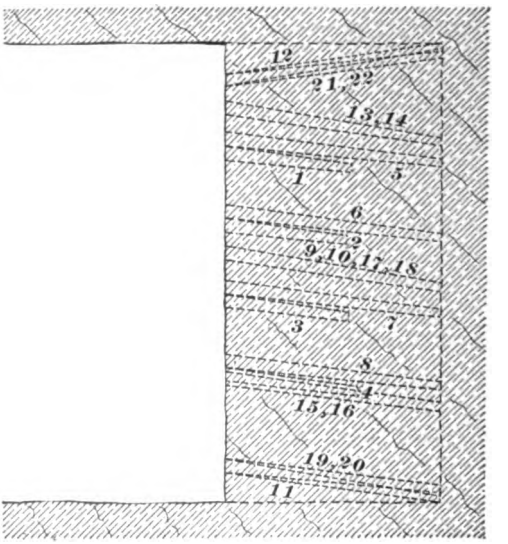

FIG. 57.

either simultaneously or consecutively; fourth volley, Nos. 13, 14, 15, and 16, either simultaneously or consecutively; fifth volley, Nos. 17, 18, 19, and 20, either simultaneously or consecutively. The effect is practically the same whether the enlarging shot-holes are fired simultaneously or consecutively, on account of the fact that they are too far apart to assist each other.

138. Side Cut in Heading.—Sometimes there is a natural parting at one side of the heading, as when the head-

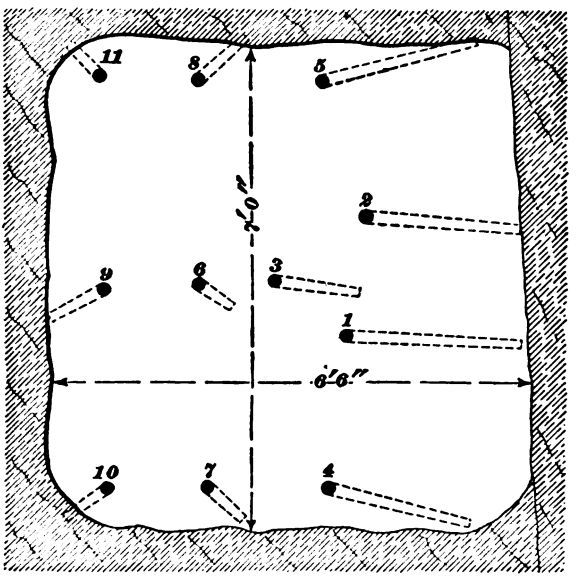

FIG. 58.

ing is following a vein of ore. In such a case the side cut offers very important advantages, and especially when only one rock-drill is employed. Fig. 58 illustrates a set of holes drilled to make an advance of 3 feet 6 inches in a heading by means of a side cut. The order of firing would be as follows: First volley, Nos. 1 and 2, simultaneously; second volley, Nos. 3, 4, and 5, consecutively; third volley, Nos. 6, 7, and 8, consecutively; fourth volley, Nos. 9, 10, and 11, consecutively.

139. Special Arrangement for Throwing Broken Rock from Face.—Of course, no general rules can be laid down for drilling holes under all circumstances, as the rock may vary from point to point in the same drift or heading, and the seams or joints will always have an effect upon the results. Fig. 59 illustrates a set of holes drilled in the face of a heading, which bring out another principle. In this case the holes are fired in the order of their numbers, the holes *E*, *E* being fired last. It will be noticed that there has been an extra hole placed at the bottom, and these bottom holes are sometimes overcharged in order that the last shot may have a tendency to throw the broken rock away from the face. If the order had been reversed, and the upper shots fired last, the broken rock would be piled against the face of the heading in the very place where the drill will have to be set up for the next operation, and much valuable time would be lost in throwing the broken material back before the machine could be set up.

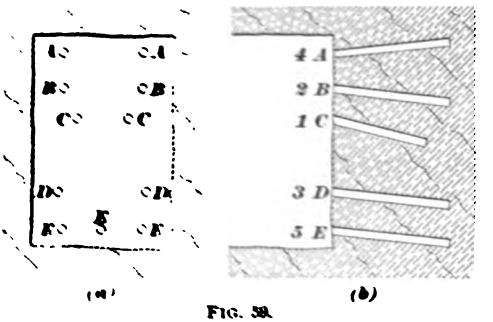

FIG. 59.

140. Blasting in Big Back Stopes.—In blasting in stopes or open cuts, special methods are sometimes employed, as, for instance, in the large stopes of the hard-ore mines, where the diamond drill is sometimes employed for drilling blast-holes. These holes are drilled 20 or more feet in length and at an angle, so that the end of the hole is sometimes 8 or 10 feet from the face to be blasted, as shown at *a*, Fig. 60. The holes are then loaded with 30 to 100 pounds of dynamite and fired. The drilling per foot is much more expensive than it would be if performed by rock-drills, but the amount of rock broken per pound of powder and per foot of

hole drilled is very much greater than would be the case where small charges and shorter holes were employed. Men-

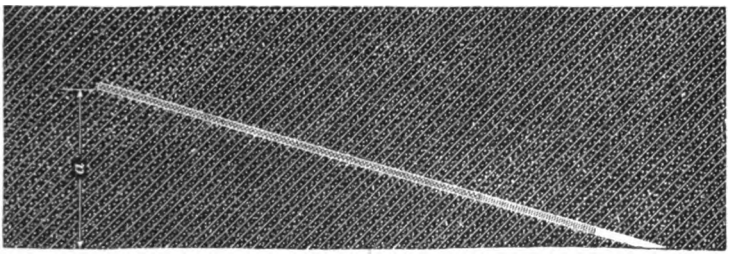

FIG. 60.

tion has already been made of chambering an opening for large blasts in quarries or underhand stoping.

141. Safety-Fuses.—When black powder is employed, it is usually fired by means of a safety-fuse. This may be described as a cord of hemp or gutta-percha containing a column of fine gunpowder in its center. For use in extremely wet places, special brands of fuses are provided which are covered with tape and gutta-percha, or with special varnish, tar, or similar compounds.

142. Charging a Hole with Black Powder.—An iron or steel tool should never be used for stemming or tamping a blast-hole, but a wooden bar, a wooden bar having a copper or brass tip, or an iron bar with a copper or brass head should be employed, so as to avoid all possible chance of premature explosions caused by an iron or steel bar striking fire from contact with the material in the hole. When a drill hole is comparatively dry, the powder is sometimes introduced without any protecting cartridge. In such a case it is best to place the fuse in the hole before all the powder has been poured in. The fuse generally has a knot tied near the end in order to lessen the liability of its being pulled out of the powder while tamping. It is best to convey the powder to the bottom of the hole through a copper tube or by means of a copper spoon. When blast-holes are damp, they may be dried by introducing some dry material

to absorb the moisture, this being subsequently removed by means of a scraper; or the powder charge may be enclosed in a water-proof covering composed of paper or tin. When the charge of powder is enclosed in paper, the cartridge is formed by making a bag of paper, introducing the fuse and powder, and then firmly tying the neck of the bag about the fuse. The bag can be made water-tight by applying grease or soap to the joint between the paper and the fuse. After the charge is ready, it is forced into the hole by means of a tamping bar and the stemming or tamping rammed on top of it as usual.

143. Firing Blasts by Squibs.—Blasts using black powder do not always require a fuse, but are sometimes fired by means of a squib, in which case the process is as follows: While charging the hole, a needle is introduced into the powder in place of the fuse. The needle is simply a pointed copper wire. After the stemming has been tamped about the needle, it is drawn out, leaving a hole through the stemming to the powder. The squib is introduced into this hole. Squibs are composed of small tubes or straws filled with a quick powder and having a slow match attached to one end. The slow match gives the miner time to get away after lighting the blast, and when the powder in the squib is lighting, it shoots a jet of flame through the hole in the stemming and into the blasting-powder. Sometimes the needle is surrounded by a thin copper or brass tube called a barrel. This barrel remains in the stemming while the blast is being fired, and can usually be recovered after the shot. The advantage of using the barrel is, that it insures a clean, dry passage for the fire between the squib to the blasting-powder. Squibs are not often used in metal mines.

144. Firing by Detonation.—Nitroglycerin explosives always require detonation by a cap or exploder in order to develop their full force. Figs. 61, 62, and 63 illustrate the method of attaching such an exploder to the end of a fuse and the placing of it in the cartridge. The exploders are loaded with fulminate of mercury and are

slipped over the end of the fuse, after which the upper end is crimped tightly against the end of the fuse, as shown in

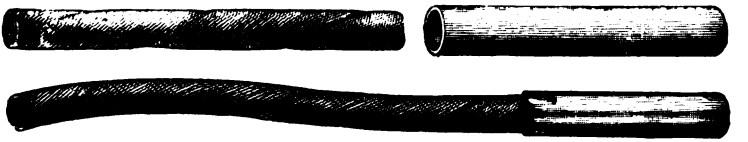

FIG. 61.

Figs. 61 and 62. (Miners sometimes bite the caps on to the fuse with their teeth. This is a very dangerous proceeding

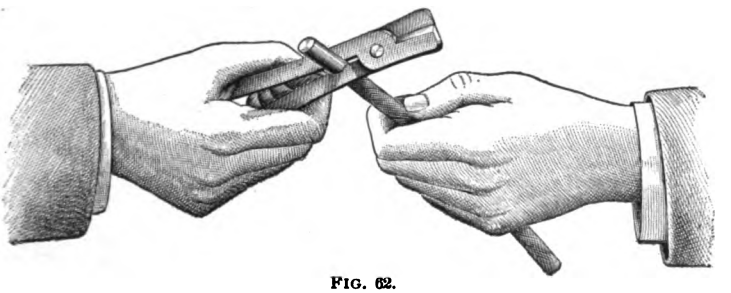

FIG. 62.

and should never be allowed, as, with strong caps, one of them exploding in a man's mouth would prove fatal.) In

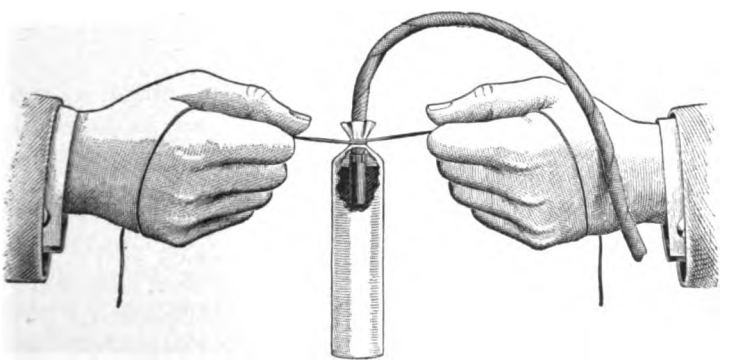

FIG. 63.

placing the cap or exploder into the dynamite or giant-powder cartridge, care should be taken that only about two-thirds of the cap be embedded in the material of the

cartridge, as shown in Fig. 63, for if the fuse had to pass through a portion of the material before reaching the cap there would be danger of its igniting the material, thus causing deflagration of the cartridge in place of detonation. The fumes given off by high explosives are much worse in the case of burning than in the case of detonating a cartridge.

145. Charging a Hole with High Explosives.— In loading a hole with high explosives, the cartridges are placed in one after another and pressed into place with a

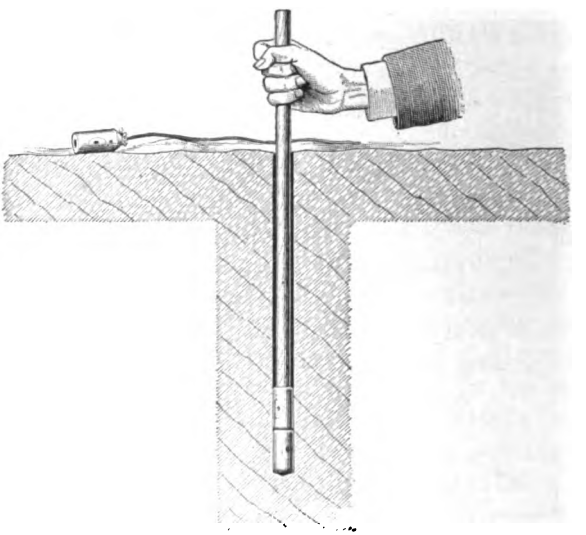

FIG. 64.

wooden bar or a copper or brass ramrod, Fig. 64; the one containing the cap is the last one introduced into the hole, and it is pressed down until it rests upon those already introduced; after this the stemming or tamping is pressed lightly upon the charge, care being taken not to explode the primer. In case the cartridges at hand are not of the size required, the paper coverings may be split open and the material forced to fill the hole with the aid of the tamping-bar.

146. Volley-Firer.—As already mentioned, there is a decided advantage in firing several holes simultaneously, so that one may assist the other. Until recently, this has been possible only with the use of electricity, but there is now manufactured an arrangement called the volley-firer. Figs. 65, 66, and 67 illustrate the use of this device and the

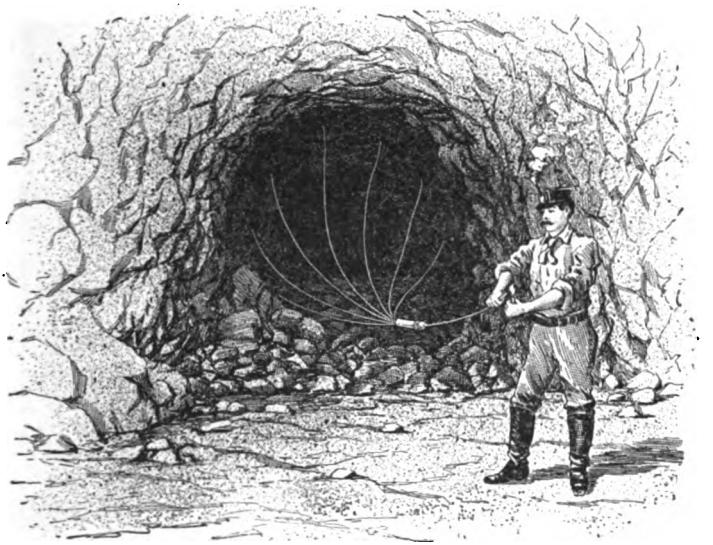

FIG. 65.

device itself. The volley-firer consists of a chamber, into one end of which an ordinary safety-fuse is introduced; attached to the other end there are a number of instantaneous fuses. These are usually in the form of loops, as shown in Fig. 66. This arrangement enables the miner to obtain the length of the fuses desired by cutting long or short ones from the loops, as illustrated in Fig. 67. After this, ordinary exploders or primers are placed on the ends of the instantaneous fuses, and the holes are loaded as though ordinary fuse and cap were being employed. When all is in readiness, the miner lights the end of the safety-fuse, as shown in Fig. 65. When the fire reaches the volley-firer, it is transmitted to the instantaneous fuses and passes through

them very rapidly to the charges to be fired. Ordinary safety-fuse burns at the rate of from 1 foot to 2 feet per minute, while the instantaneous fuse burns at the rate of 120 feet per second. The result is that the shots are fired practically simultaneously. This method is advantageous

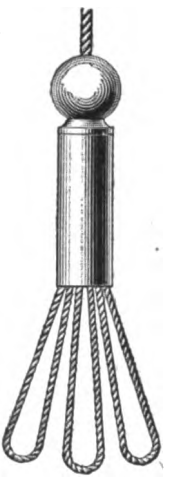

FIG. 66.

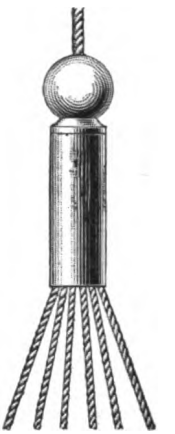

FIG. 67.

where simultaneous firing is required for a short time only, for electric fuses are cheaper than instantaneous fuses, but an electric battery is quite expensive; hence, for a small amount of work the instantaneous fuse might be preferred, while for continuous operation the electric system would certainly be preferable.

147. Electric Blasting.—The method of electric blasting, as used in America, depends upon the generation of a current of electricity by means of a small magneto-electric machine, which is really a small dynamo. This current is carried through wires to the charge to be fired.

148. Electric Exploder.—Fig. 68 illustrates one of the electric exploders. The wires *A* and *B* bring the electricity to the exploder; *D* is a cement (usually sulphur) placed in the cap to protect the explosive compound and to

keep the wires in place. The ends of the wires are connected by a short piece of platinum *E*. *C* is the explosive compound, which is usually composed of mercury fulminate.

FIG. 68.

The explosive compound and cement are contained in a copper shell, as shown. When the current of electricity passes through the wire *E*, it heats the platinum, thus igniting the explosive.

149. Battery.—Fig. 69 illustrates a common form of magneto-machine (frequently called a battery). Fig. 69 (*a*)

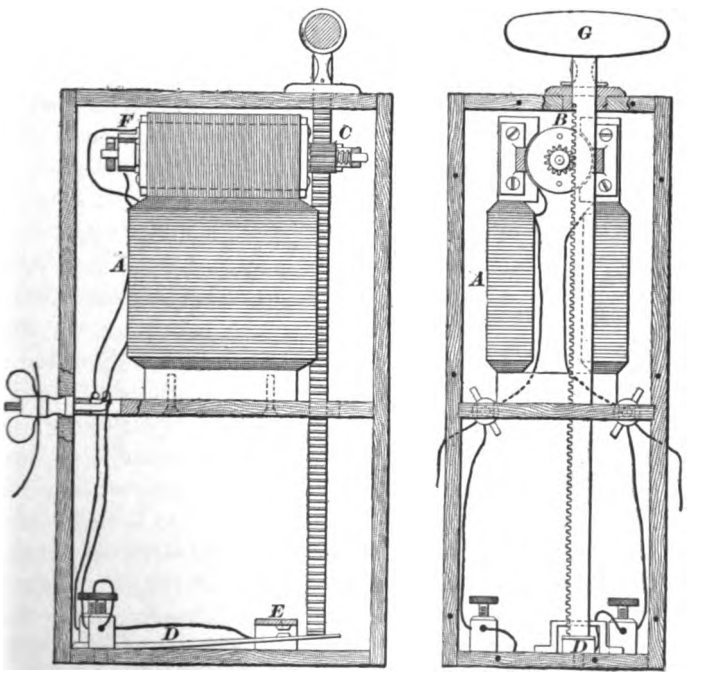

(*a*) (*b*)

FIG. 69.

is a side view and Fig. 69 (*b*) an end view of the machine

In both cases part of the woodwork has been removed so as to show the interior arrangement, which may be described as follows: *A* is the principal magnet; *B* is the armature revolving between the poles of the principal magnet; *C* is the loose pinion (the teeth of which engage the rack-bar), which is arranged with a clutch, so that as the rack-bar descends the pinion will cause the armature to rotate; *F* is the commutator. At *E* there are two platinum bearings, one on the upper face of a spring *D* and the other on the under side of the yoke *E*. As the rack-bar is descending, the current flows through the spring and the yoke without affecting the outside circuit. At the moment the rack-bar comes in contact with the spring *D*, it breaks the connection between the platinum bearings and sends the full strength of the current through the outside circuit, which contains the fuse in the caps for firing the blasts.

150. Placing the Cap.—Fig. 70 illustrates the method of placing an electric exploder or cap in a cartridge of giant powder. The cap is placed either in the bottom or at the side of the cartridge, as illustrated at *A*, the hole to receive it having been made with a sharp stick or lead-pencil. After this is accomplished, the blasting wires *B* are tied firmly to the cartridge, as illustrated at *C*. In firing giant powder by means of electricity, there is no danger of the wires setting fire to the powder, and hence the exploder can be placed well down in the cartridge. Sometimes, when a long charge in a very deep hole is to be fired, two or more electric exploders are used in the same charge, one cartridge containing an exploder being placed near the bottom of the hole and another near the top. The method of loading holes for firing by electricity is the same as that described for firing with fuses. Care should be taken to see that the lead wires are not in

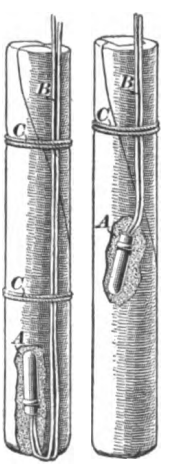

FIG. 70.

contact with the damp earth at any point, also that in tamping the hole the wires have not been broken or the covering materially injured and the wires brought into contact with each other or with the damp ground.

151. Connecting Up and Firing the Blast.—After the blast-holes have been loaded and the fuse wires are projecting above the surface of the rock, they are connected by means of connecting wires in such a manner as to leave one free wire at each end of the series to be fired, as at *b*, *b*, Fig. 71, *a*, *a*, etc. being fuse wires leading downwards to the charges to be fired.

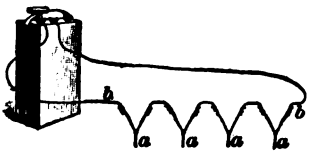

FIG. 71.

After all is in readiness, the leading wires are connected to the loose ends *b*, *b*, and when every one has left the vicinity of the blast to be fired, the other ends of the lead wires or cables are attached to the blasting machine. Some blasting machines are provided with three screws on the outside, to which cables can be attached. When only a small number of blasts are to be fired, one of the cables is attached to the middle screw and the other to the outside, as illustrated in Fig. 71. When a large number of blasts are to be fired, the cables are arranged as shown in Fig. 72, *a a*, etc., being one

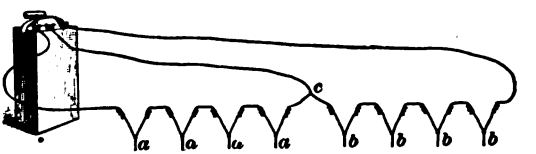

FIG. 72.

series of blasts, and *b b*, etc., being another series of blasts. The wires on the outside screw are attached to the ends of the entire series, as in the previous case, while the wire from the central post or screw is attached to the center of the series of connecting wires, as at *c*. By this arrangement, a larger number of blasts can be fired with a given battery, and the size of the lead wires or cables is very much reduced.

Fig. 73 shows a man in the act of firing a blast. This is accomplished by lifting the handle *G*, Fig. 69, up to its full height, and when everything is in readiness, pushing it downwards, for the first half inch or so slowly, and then with full force. When the rack attached to the handle reaches the bottom of the box, it breaks the contact between the poles at *E*, Fig. 69, as has already been explained, and sends the current through the exploders in the blasts to be fired.

FIG. 73.

When firing a blast by means of a battery, the handle or rack-bar should never be churned up and down, but should simply be given one vigorous stroke, as directed. Most batteries are made to fire with a downward stroke as described, but some fire with an upward stroke of the handle, while others have a crank in place of the rack-bar. Great care should be taken in handling a battery to see that it is always clean and that it is never abused or played with. The strength of the battery should be tested from time to time by means of a test lamp or galvanometer. Test galvanometers are furnished, by means of which the circuit and the fuses can be tested to see if any breaks exist, previous to firing the blast.

152. Remarks on Firing Blasts by Electricity.— To insure success in firing a blast by electricity, the following points should be observed:

1. That the battery wire and primers are suitable to each other. (Never use primers of two different kinds in the same blast.)

2. That the battery is of sufficient power to fire all the caps or primers connected at one time.

3. That the electric fuses or primers are kept in a dry place, and that everything is kept as clean as possible.

4. That all the joints at connections and points of contact of the wires are well made, and that the surfaces are clean. Also that the joints in one wire do not touch those in another.

5. That the wires do not kink or twist so as to cut the insulation during the process of tamping. (If the insulation is cut, the fuse is useless for wet ground or a wet hole and should be laid to one side.)

6. That the operator's hands do not touch the terminals of the battery when firing.

7. That the battery is not connected to the leading wire or cable until every one is in safety.

153. Explosives.—A good explosive must be reasonably safe to handle, transport, and store under ordinary conditions, and must be able to stand such fairly rough usage as it may be expected to meet with. It should also not give off actively poisonous gases or vapors nor deleterious ones, either before or after the explosion.

154. Black Powder.—While there are so many different makes of explosives that it would be impossible to give a description of each by name, a description of a few of the general classes may be of interest. (1) Those belonging to the slow-rending class of powders which are commonly known as black powder, and consist of mechanical mixtures of charcoal, sulphur, and saltpeter or nitrate of soda. The percentage of the various ingredients varies from 12% carbon, 8% sulphur, and 80% saltpeter for quick or "sporting" powders, to 20% carbon, 16% sulphur, and 64% saltpeter for slow-acting blasting-powders. There are various grades between these limits which are manufactured for special purposes; the ingredients for the powder are mixed together and compressed into solid cakes, which are then broken up into grains, sized and glazed preparatory to being shipped.

155. High Explosives.—The next general class of explosives is the high-explosive class, and they are all nitro-compounds, and most of them are nitroglycerin compounds with some inert substance, or with some substance which will absorb the nitroglycerin; as, for instance, Atlas A is composed of nitroglycerin 75%, fiberless wood 21%, nitrate of soda 2%, and magnesia 2%, while some of the giant powders contain nothing but nitroglycerin and some absorbent compound. Dynamite is a general name given to the compounds of nitroglycerin with various substances, and is sometimes called giant powder. Rackarock powder is composed of nitrobenzol 22.3% and chlorate of potash 77.7%. This powder is manufactured in two parts, the nitrobenzol being a fluid which can be added to the solid ingredient by the party using the material. There are a great many other nitro or nitroglycerin compounds, some of which are claimed to be stronger than the pure nitroglycerin.

156. Safety Powders.—There is a third general class of powders called safety powders, which are special compounds intended for use in gaseous mines. The point aimed at in the manufacture of such explosives is to so constitute the compound that ignition will take place without the extremely high temperature which so often occurs with explosives of this class.

157. Storing of Powder.—In regard to the storing of powder there are several points of importance: While nitroglycerin is a liquid with a high boiling-point, it evaporates sensibly at temperatures a little over 100° F., and on this account dynamite or giant powder should never be heated to a point much above this limit. As a rule, powder should be stored in a dry place having a fairly even temperature. Stoves or steam-pipes should never be allowed in a building in which the powder is stored, but if this building requires artificial heat, it should be imparted by means of hot-water pipes, and the temperature should not rise above 100° F. When dynamite is being used on a

large scale during the winter, it is well to provide a special thawing room, which will be kept at a temperature of between 80° and 100° F. and in which one or two days' supply of the material can be kept, so that it will always be ready for use.

158. Thawing of Powder.—All the nitroglycerin compounds freeze at 42° F., below which temperature they can not be depended upon, and will either fail to go off entirely or will give only imperfect and unsatisfactory results; hence, in cold weather all compounds containing nitroglycerin have to be thawed or brought to a temperature above 42°. Giant powder should never be thawed before an open fire; a good method of thawing it is to employ one of the special devices manufactured for the purpose, as illustrated by Fig. 74. This consists essentially of a metal pan having tubes which pass clear through it. The tubes are surrounded by water, and the whole is so arranged that a miner's lamp or a candle can be placed underneath the pan to keep the water warm. When in use, the holes *a* are filled with sticks of powder, the space surrounding them being full of water, after which the cover *b* is slipped over in such a manner as to keep the giant powder from falling out of the tubes. Then a lamp or candle is placed under the pan and the powder will soon be ready for use. These thawers are especially useful on account of the fact that they can be carried from place to place in the mine, and the warm water in the portion surrounding the tubes will keep the powder in good condition for some time, even without the introduction of a lamp under the pan.

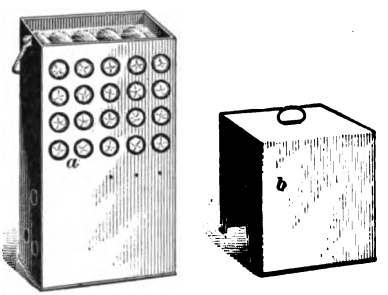

FIG. 74.

159. Sometimes giant powder is thawed by introducing a small steam-pipe into a barrel or box of water, the powder

being placed in a tin vessel which floats in the warm water. Miners sometimes keep the powder warm by carrying it in their boots or inside of their clothing, but this is not to be recommended, as some of the powders contain substances which are poisonous and may in time cause serious trouble.

160. Blasting Gelatine.—A class of explosives known as blasting gelatine, or gelatine dynamite, have been brought out lately which are much stronger than liquid nitroglycerin. Some of them have the additional advantage that they are not injured by cold, hence do not require thawing. They are all plastic, which is a great advantage in placing them in the drill holes. Another advantage possessed by some of them is that they are unaffected by water. If any of the nitroglycerin compounds are submerged in water, the water will immediately begin to dissolve out the nitroglycerin and the explosive soon loses much of its force. These blasting gelatines can, as a rule, be handled somewhat more roughly than dynamite, and they require special caps or special electric exploders to produce the detonation necessary to develop their full power. When detonated by a cap of sufficient strength, the fumes resulting from them are practically harmless. Another advantage of some of the compounds is that while they possess such great power, they do not act quite as rapidly as nitroglycerin, and hence have more of a rending and less of a shattering effect.

161. Bulk of the Explosive.—For blasting in hard rock, the commercial value of an explosive depends chiefly upon the effect a given bulk of it can produce, as the cost of the holes or chambers which have to be bored depends on these qualities. For instance, if a given number of cubic inches of gunpowder produces only one-quarter the effect of the same number of cubic inches of dynamite, it is evident that fewer holes or smaller holes will be required when blasting with dynamite than when blasting with gunpowder.

162. Plasticity.—A very valuable quality in an explosive is plasticity, that is, it should be so soft that it can be made to take the shape of the hole in which it is to be used. A bore-hole can not be charged with any rigid explosive without leaving air-spaces in the charge, causing a loss of blasting power.

163. Blasting Building Stone.—When the cohesion of a mass of rock is small (as when it is cut up into blocks by joints or natural divisions, as is the case in much rock used for building material), a bore-hole of small diameter will contain sufficient gunpowder or low explosive to crack and move the rock from its bed. There is evidently a great advantage in using this explosive, as it is cheaper and has less tendency to shatter the rock.

164. Products of an Explosion.—The gases given off by an explosion of gunpowder are carbonic acid gas, CO_2, nitrogen gas, N, carbon monoxide, CO, and hydrogen gas, H, all of which will injure the ventilation of a mine, while the carbon monoxide is an actively poisonous gas. Some of the high explosives give other compounds, and in the case of an imperfect detonation or explosion, the gases which result are very much worse than those resulting from perfect combustion. As all explosives are burned, and as the products of all combustion are compounds without free oxygen, it is evident that the gases from any powder will injure the quality of the air, even if they are not actively poisonous, and on this account arrangements must be made for the removal of powder gases by means of currents of fresh air.

165. Adapting the Explosive to the Work.—When using powder for blasting, care must be taken as to the amount of explosive employed. An excessive amount of high explosive produces a large proportion of fine material, and when mining ores which occur in crystals, such as

the ores of zinc, lead, etc., the use of too much strong powder is liable to cause great losses of fine material. It is sometimes best to use two or more grades of powder in the same mine; as, for instance, a high explosive for sinking and drifting in the hard country rock, and a low-grade explosive for mining the mineral.

166. Lighting the Fuse.—In firing blasts by means of fuse, where it is desired to have the shots follow one another, the fuses are made of various lengths and then all lighted at one time. If an ordinary fuse is simply cut off on an angle and lighted by means of a match, it is sometimes difficult to start the powder, and on this account the miner may have to leave before he has all the shots lighted. In order to make sure that the fuse takes the fire, a number of devices are used. Sometimes the end of the fuse is split, as shown at *a*, Fig. 75, and a small wedge or piece of giant powder introduced. When giant powder is lighted, it simply burns with a very bright and fierce flame, and hence a small piece burned at the end of the fuse is almost sure to properly ignite it. Another scheme is to use pieces of candle-wicking dipped in kerosene, which are twisted about the end of the fuse, as shown at *a*, Fig. 76. After all the blasts are ready and the fuses in place, these pieces of candle-wicking are adjusted, and the miner can light them all very quickly by simply passing his lamp from one to another. The burning of the oil on the candle-wicking burns through the fuse and lights it.

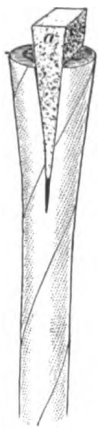

FIG. 75.

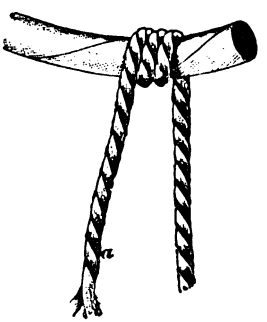

FIG. 76.

MINE TIMBERING AND UNDERGROUND SUPPORTS.

TIMBERING.

NARROW DEPOSITS.

167. Stulls.—Forms of timbering for shafts and tunnels have already been described. The principal openings of a mine from which the ore is extracted, that is, slopes and breasts, usually require some support, either timbering or filling. The simplest form of timbering for use in stopes is a stull or post, which is set across the vein or deposit to keep the hanging wall or roof in place. Fig. 77 illustrates a stull at *a*, on which lagging has been placed to hold the broken ore as it is mined from above. Stulls are placed either at right angles to the deposit or at a slightly greater angle, so that should the hanging wall have a tendency to settle, it will tighten the stulls. Stulls are used in overhead stoping for supporting the stages on which the men stand while working.

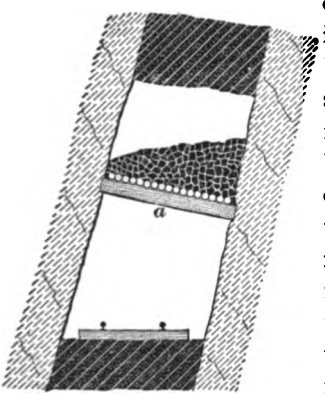

FIG. 77.

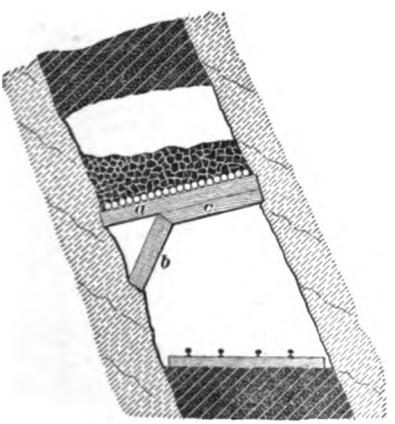

FIG. 78.

168. Helped Stulls.—Fig. 78 illustrates a stull in a wide vein, where it has become necessary to use

some additional support in the form of a brace or post as shown at *b*, the brace or post bearing against another stull at *c*, the two together supporting the stull *a*.

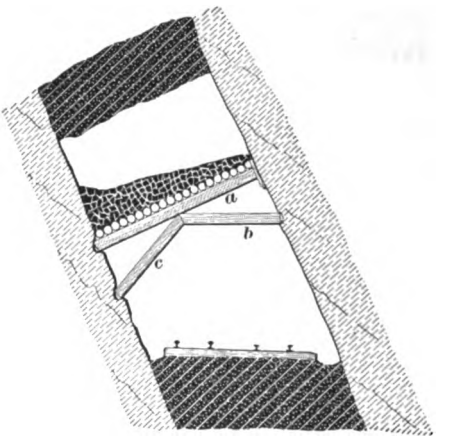

FIG. 79.

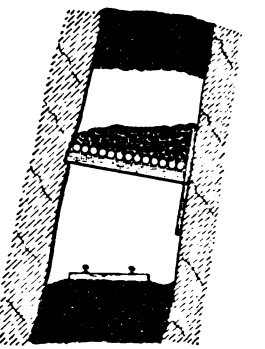

FIG. 80.

169. Saddlebacks.—Another method of accomplishing the same thing is shown in Fig. 79, in which case two

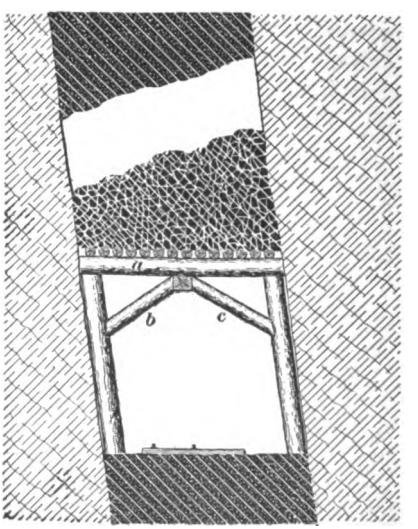

FIG. 81.

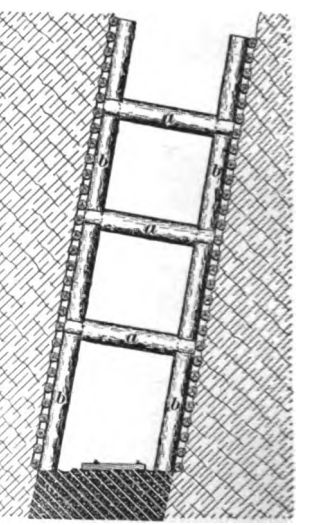

FIG. 82.

diagonal braces *b* and *c* meet at the center to support the stull *a*. These braces supporting the stulls are sometimes called "saddlebacks."

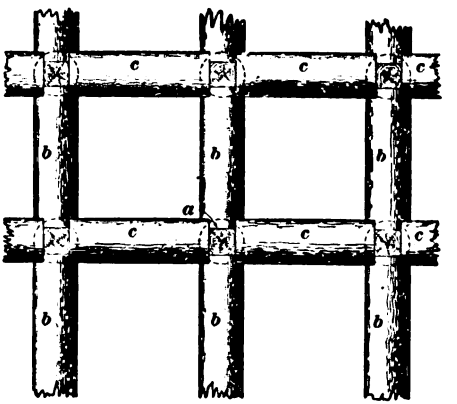

FIG. 83.

170. Plates or Sills.—If one wall of the deposit is soft, it may be necessary to use plates or sills against that wall, as illustrated in Fig. 80.

171. Posts and Rough Square Sets.—When both walls are of a weak or treacherous nature, it becomes necessary to support both ends of the stull upon posts. Fig. 81 represents such an arrangement, the stull *a* being also provided with saddleback braces *b* and *c*. Sometimes this arrangement of supporting the stulls by means of posts is continued on up the stope and becomes practically a rough system of square sets, as illustrated by Figs. 82 and 83. Fig. 82 is a cross-section of a stope timbered in this manner, and Fig. 83 is a longitudinal section showing the position of the timbers.

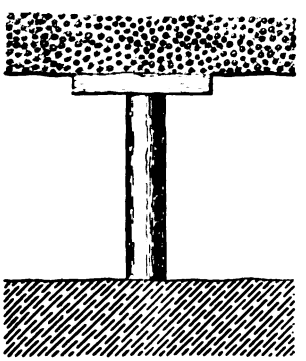

FIG. 84.

a are the stulls, sometimes called caps. The timbers *b* are the posts, and *c* are the sprags, which are used to keep the stulls from moving in the direction of the length of the stope. The principal difference between this system of timbering and the square-set system, which will be explained later, is that the caps or stulls always reach entirely across the deposit, the posts and sprags being cut to fit the stulls or caps. One

or both walls may require lagging. In the illustration, Fig. 82, both walls are lagged.

172. Posts and Breast Caps.—In working comparatively flat deposits which are only a few feet thick,

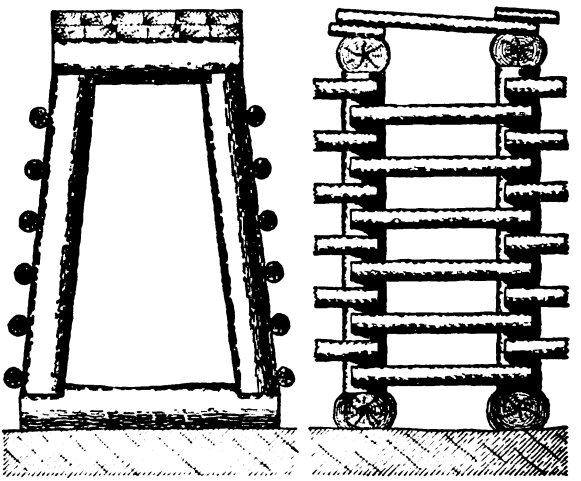

FIG. 85.

posts and breast caps, or breasting caps, are sometimes employed. Fig. 84 illustrates such an arrangement as applied to a drift gravel mine. By referring to Fig. 39, the application of posts and breast caps to the mining of zinc ore can be seen. Where the deposit is somewhat thicker, or is very irregular, it is frequently mined by means of drift sets such as shown in Fig. 85. Fig. 39 illustrates the application of drift sets to the removal of irregular and "pockety" deposits.

SQUARE SETS.

173. Origin of Square-Set System of Timbering.—Stulls can not be used in large openings on account of the fact that timbers of sufficient size to retain the walls

in place could not be transported through the shaft and the mine passages to the stopes. The difficulty of supporting wide or large openings led to the invention of the American square-set system of timbering, which is really an outgrowth of the system illustrated in Figs. 82 and 83; that is, it is composed of stulls or caps supported on posts, and

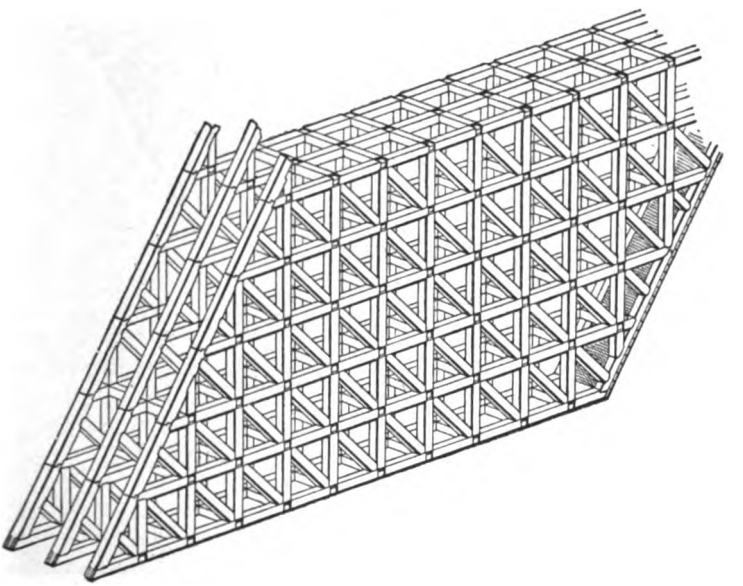

FIG. 86.

having sprags to keep the caps in position. Fig. 86 represents the square-set system of timbering as applied to the Comstock Lode at Virginia City, Nevada. This system really consists in taking out square blocks of material and replacing them by sets of timbering. In this way a substantial framework of timbering follows the mining operations, which are always carried on by overhead stoping.

174. Methods of Placing the Timbers to Resist Different Pressures.—When applied to steeply inclined deposits, as shown in Fig. 86, the foot and hanging wall may require lagging, as shown on the foot-wall, Fig. 86, and on both foot and hanging wall, Fig. 87. Also, when

applied to inclined deposits, diagonal braces *c*, Fig. 87, are sometimes employed. This system of timbering consists

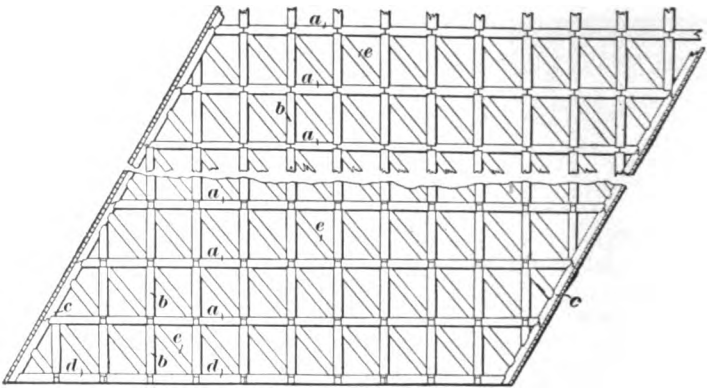

FIG. 87.

essentially of sills *d*, which are made long enough to pass under two or more posts, so that when the timbering of the

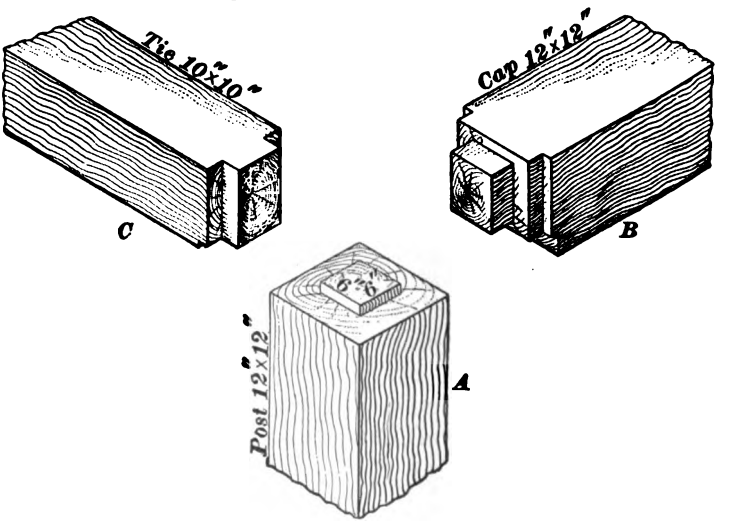

FIG. 88.

stope below comes up to support the timbering of a given stope, these long sills can be taken up and supported with

less difficulty than would be the case if short sills were employed. On these sills the posts *b* are placed, and at the top of the posts the caps *a*; *c* are the wall-plates, which carry

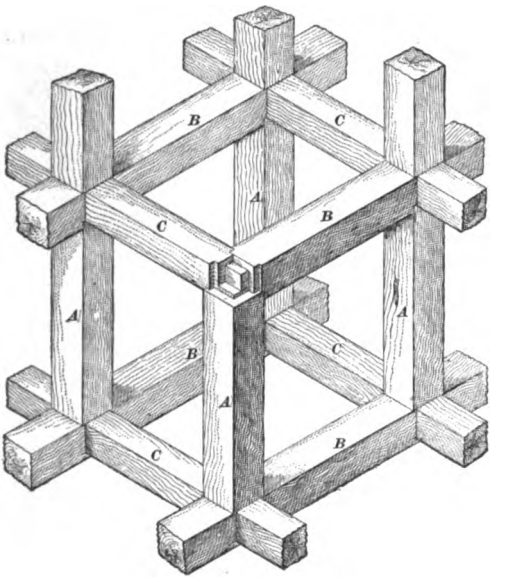

FIG. 89.

lagging for the support of the inclined walls; *e* are the diagonal braces. In the lower half of Fig. 87, the timbering is framed for pressure from above and the legs are continuous,

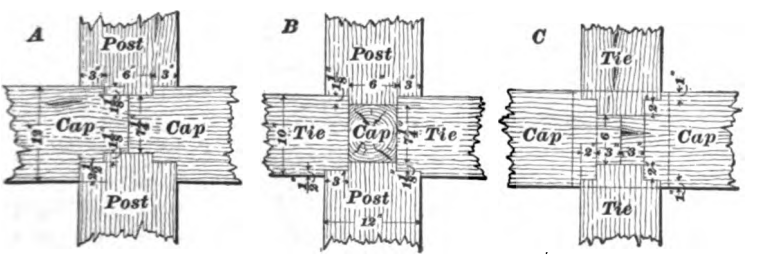

FIG. 90.

one resting against the other, while in the upper portion of the illustration, the timbering is framed to resist side pressure, the caps being continuous and butting one against the

other, while the legs are simply mortised into the caps. The sprags or girts can not be seen in Fig. 87.

175. Forms of Joints.—One method of joining the timbers for square sets is illustrated by Fig. 88. In this case the caps and posts are both 12″ × 12″ timbers, while

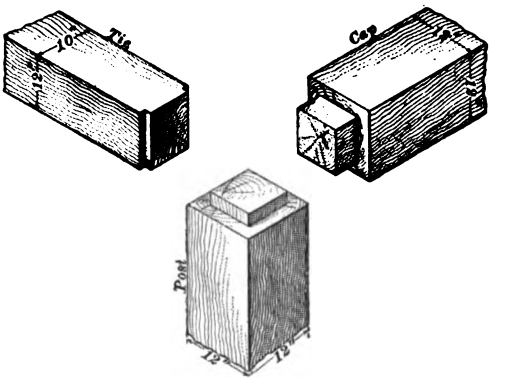

FIG. 91.

the ties or girts are 10″ × 10″ timbers. Fig. 89 illustrates a set of timbers in place, *B*, *B* being the caps, *C*, *C* the ties or girts, and *A* the posts. The dimensions of the various faces of the joints are shown in Fig. 90. Fig. 91 illustrates

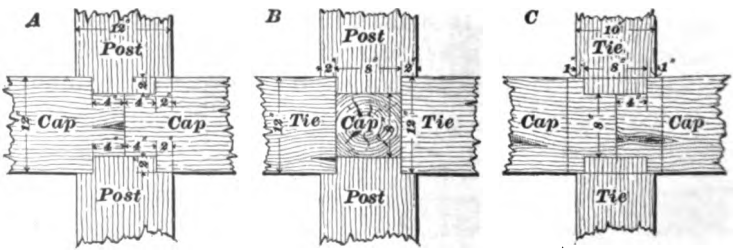

FIG. 92.

a method of framing the joints, which is somewhat simpler than that illustrated in Figs. 88 to 90. In this case the tie or girt is composed of 10″ × 12″ timbers, and posts and caps are both 12″ × 12″. When the sets are erected, they would look like those shown in Fig. 89. The dimensions for the various faces in this form of joint are shown in Fig. 92.

176. Sills.—In place of using a regular cap for the first timber on which the posts are to rest, the common practice is to frame special sills as shown in Fig. 93. In this case the sill has been made continuous under several

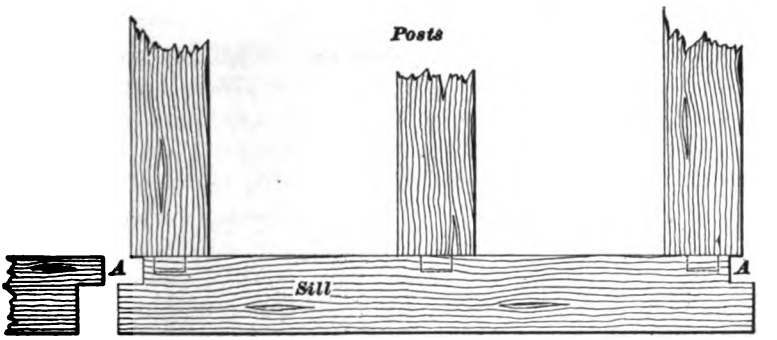

FIG. 93.

posts, and this form has the advantage that when the work from below comes up under the timbering of any stope, it is easier to support the upper timbering where the sills are continuous or where they are joined under the posts, as shown in Fig. 93 at *A*. The sills are sometimes called "mudsills."

177. Forms Applicable to Mines Producing Rich Ore. — The square-set system of timbering proved very effective in the mines where it was first applied, but it was found necessary to fill most of the stopes with rock before all

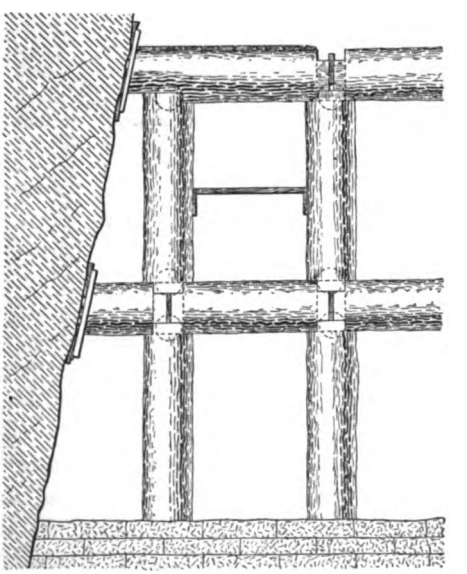

FIG. 94.

the deposit could be removed. The timbering as used in Nevada was practically all made from sawed material, and the form of joint, etc., illustrated in Figs. 86 and 87 are especially applicable for mines producing very rich ore.

178. Use of Round Timbers.—When the square sets were applied to mines producing low-grade material, it became necessary to reduce the timbering expense as much as possible, and hence round timbers came into use. Fig. 94 illustrates a cross-section of the timbering in one of the California mines, and Fig. 95 a longitudinal section. This is really a modified square set. It will be noticed that in place of the caps, a double set of ties or sprags is employed. The timbers as used in this mine are very heavy, the posts being 8 feet long and from 18 to 24 inches in diameter. In other cases the length of the legs or posts has been reduced to 7 feet or 6 feet 6 inches. Fig. 17, Art. **58**, represents square-set timbering formed from round logs, as used in one of the Michigan iron mines. In this case the sprags or ties were replaced by timbers the same size as the caps, and these timbers were framed exactly like the caps, as shown in Fig. 96, the dimensions being as follows: *c* and *f* each 10 inches; *d*, *e*, and *i* each 2 inches; *a* to suit the size of the legs; and *b* any

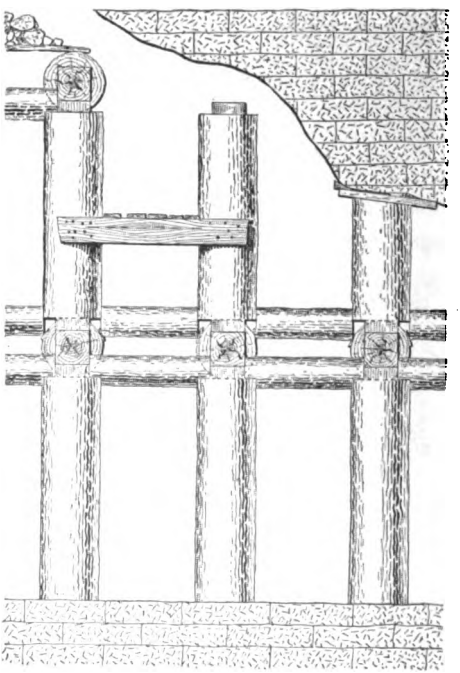

FIG. 95.

convenient angle, usually 45°. These sets were so framed that the dimensions, center to center, were 8 feet in all directions, hence all the legs were 7′ 2″ long and the other sticks

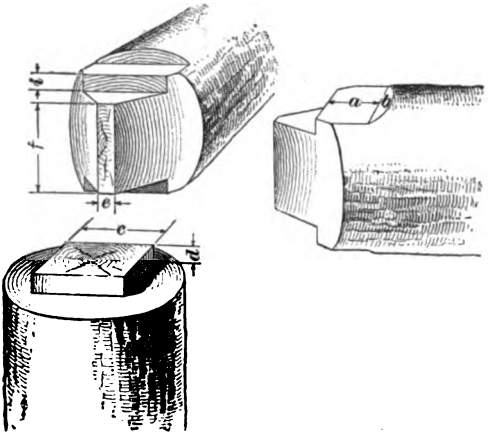

FIG. 96.

7′ 10″ in length. Some mines use a somewhat shorter stick, making the sets 7 feet from center to center. In these mines no diagonal braces are used in the sets, and it was

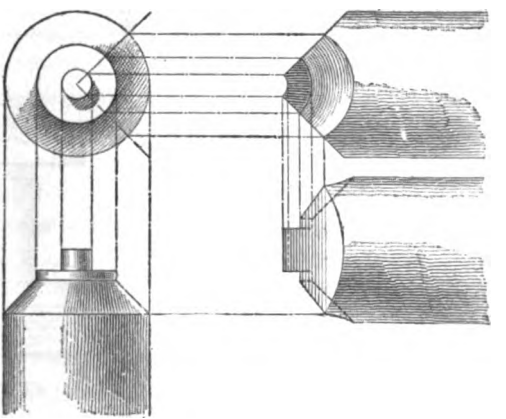

FIG. 97.

found best to allow the legs to bite the girts and caps, as by that means the girts and caps were held firmly and had less tendency to spread or go out.

179. Patent Round-Tenoned Square-Set Timbering.—A form of timbering as illustrated in Figs. 97 and 98 was patented and introduced into a number of mines a few years ago, but in most cases it has proved a total failure on account of the following facts: The ends of the posts rested against each other, as at *a*, Fig. 99, and as the distance between the shoulders which were supposed to bite the ends of the caps was exactly 7 inches, it frequently occurred that a little dirt or something kept the joints at *a* from making perfect contact, and the caps simply rested loosely between the shoulders; also the bearing on the portion *c* was frequently forced out of contact, on account of dirt falling between the timbers while they were being placed. When side pressure came upon the stopes in an uneven manner, the caps and sprags had a tendency to rotate about the pin *a*, thus throwing the timbering out of line, and finally resulted in the destruction of the entire structure. This patent timbering could be framed at from 30 to 75 cents per set (the sets being composed of 5 pieces, 2 legs and 3 caps, the caps and girts being alike), depending upon the number of sets put through in a month; but owing to the difficulties above mentioned, it had to be abandoned, and the mines still using the square-set system have returned to the square face, as shown in Figs. 17 and 96.

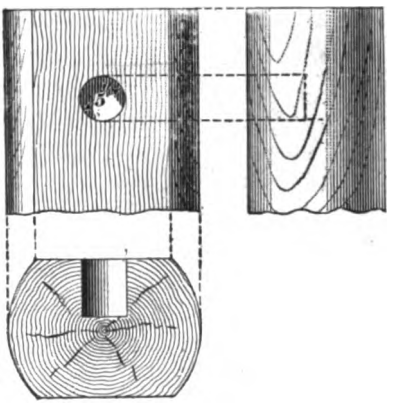

FIG. 98.

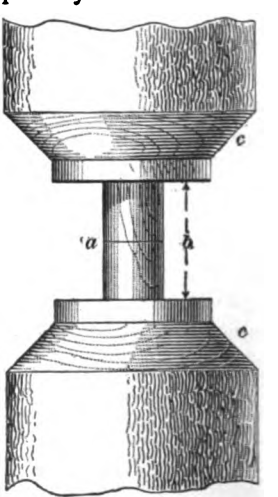

FIG. 99.

180. Timber-Framing Machine.—The faces of the timbers for square sets may be dressed by hand or by machinery. Fig. 100 illustrates a machine for framing

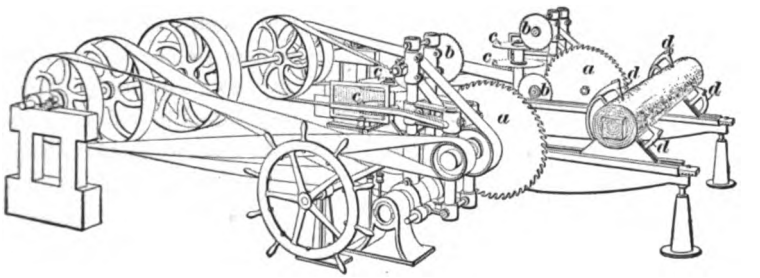

FIG. 100.

timber for square sets from either square or round timber. The stick is placed in the machine and secured by means of the dogs *d*, *d*. Large saws *a*, *a* are so placed that they will cut the stick to the exact over-all length. The four saws *b*, *b* (one of which is out of sight) cut down the shoulders on the stick, and the four saws *c* form the vertical faces of the shoulders. After the stick has passed through the saws once, it is drawn back into the position shown, and the entire frame, dogs and all, swung through an angle of 90°, when it is fed to the machine once more so as to cut the shoulders on the other side of the tenons. The stick shown in the illustration is finished and ready for removal from the machine. The saws *a* and *b* are cross-cut saws and the saws *c* rip-saws. All the saws can be adjusted within certain limits, so as to cut various styles of tenons. The use of a framing machine insures the faces of the tenons on both ends of the sticks being perfectly parallel, of the same size, and of the standard length. On these accounts it is possible to frame the joints more exactly to size than with hand framing.

181. Advantages of Using Machine-Framed Timber.—When the timbers are framed by hand, the joints are always cut a little free to allow for any unevenness in

the surfaces, and when they are cut by machinery, they are sure to be of the proper size. As timber does not shrink in the direction of its grain, it is evident that where the posts have tenons which meet, if the caps shrink slightly they will become loose in the space between the shoulders. Fig. 101 illustrates this point; *a*, *a* are the posts and *b*, *b* the caps; the posts have tenons *c*, *c*, which meet as shown, and the ends framed on the caps just fill the spaces between the shoulders at *d*, *d*. Now, if the tenons on the ends of the caps shrink, they will not fill the space between the shoulders *d*, *d*, and there will be an open space as indicated by the dotted line. If the ends of the tenons *e*, *e* on the caps *b*, *b* fit tightly against the tenons *c*, *c* on the ends of the posts, when these tenons shrink there will be an open space as indicated by the vertical dotted lines. From this it will be seen that if the timber is cut green and framed to the exact size, subsequent shrinking may open some of the joints; but as most timber is kept damp in the mine, this action rarely causes much trouble, and if its results are feared, the tenons *c*, *c* may be made a trifle short, so that the shoulders *d*, *d* on the posts will bite the tenons *e* on the caps.

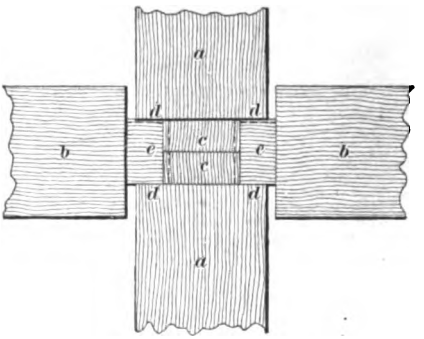

FIG. 101.

182. Precautions to be Taken in Placing Timber.—In placing any mine timbering, great care should be taken to see that all the legs are vertical and that the sets are kept in line. In the use of square sets, when caps and sprags are made alike, it is well to place the top lagging of one set on the caps, and the lagging of the next set on the sprags, thus reducing the tendency to break the timbering.

MISCELLANEOUS TIMBERING.

183. Timber Pillars or Cogs.—At times in large stopes having comparatively good roofs, it becomes necessary to build artificial pillars or bulkheads to support the roof. These are either cribs of solid timber, piled up log-house fashion, or they are cribs piled up log-house fashion with some space between the timbers, this space being filled with waste rock. Fig. 102 illustrates such a timber crib or cog.

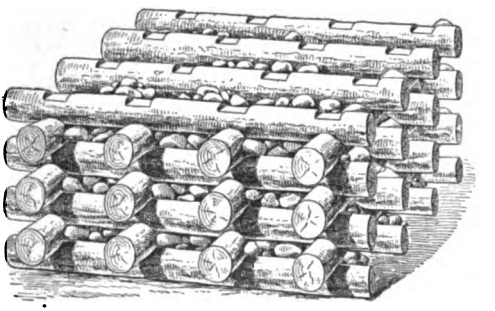

FIG. 102.

184. Size of Timbers for Stopes.—Formerly an attempt was made to support the openings entirely by means of timbering. This necessitated the use of very large timbers. In some cases the timbers were 20″ × 20″ or 20″ × 28″ when sawed timbers were employed, and when round timbering was employed, sticks of from 24 inches to 30 inches in diameter were very common in some localities. With the use of these large logs, no attempt was made to fill the mine, but the difficulty of handling such heavy timbers underground, together with its great expense and the fact that even this heavy timber is not always sufficient to keep the ground in place, is leading more and more to the use of small timbers with subsequent filling, or with the caving of the old workings after the ore is removed. 12″ × 12″ square timbers are successfully used in most of the mines at Butte, Montana, the stopes being subsequently filled with waste material.

185. Timbering of Drifts.—Drifts in mines are timbered in a manner similar to that employed for tunnels, but the drift sets are usually lighter, and the drifts are as small as is consistent with the passage of the cars. This is

especially true in the precious-metal mines. Fig. 103 illustrates a drift set framed from square timber and used in one of the Colorado mines. Fig. 104 illustrates a drift set framed with round timbers and also used in one of the Colorado mines. Fig. 85 illustrates a small drift set framed from

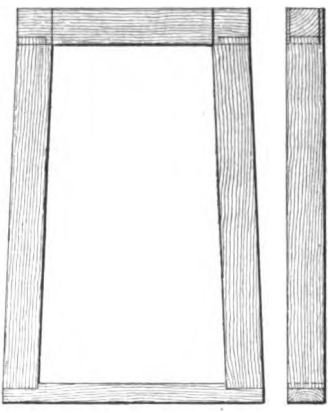

FIG. 103.

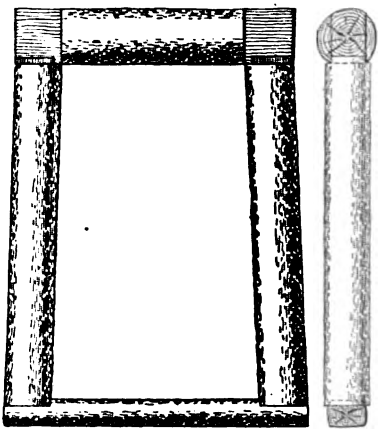

FIG. 104.

round timbers and sometimes used for the removal of the entire deposit by the process called drift mining, as illustrated in Fig. 40, Art. **89.**

186. Vertical Posts in Drift Sets. — Where the drifts are to connect with stopes, and may themselves ultimately become a portion of the stopes, it is common practice to use the regular stope timbering in the drifts and to frame the posts and caps just like those in the regular drift sets. In this case the posts of the drift sets will be vertical. Fig. 105 illustrates a drift or tunnel set framed from square material, in which the posts are perpendicular. The tracks in this drift are slightly elevated, in order to provide a water-drain over the sill timbers and at one side of the track. Water-drains, when necessary in drifts, may be constructed under the sills or over the sills. In the latter case, the total height of the drift must be increased, so that the miner will have headroom when walking upon the track.

187. Points to Observe in Determining the Cross-section of a Drift or Tunnel.—In determining

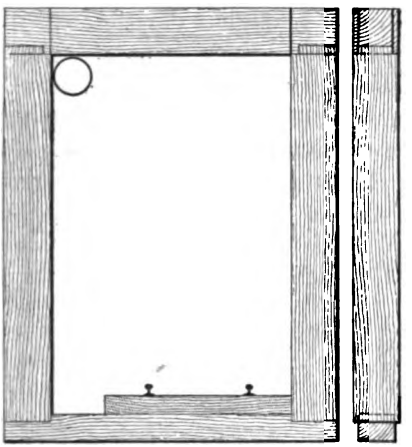

FIG. 105.

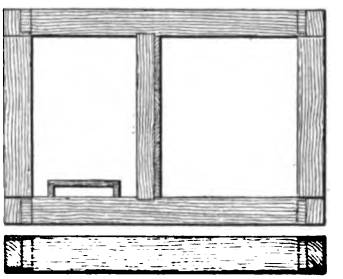

FIG. 106.

the cross-section of any drift or tunnel, it is especially necessary to take care that space is provided for all air-pipes, water-pipes, or wires that may be carried through the drift or tunnel.

188. Square-Set Timbering for a Raise.—Fig. 106 illustrates the framing of square sets for a raise, as used in one of the Colorado mines, the larger compartment being for an ore chute and the smaller one for a ladderway.

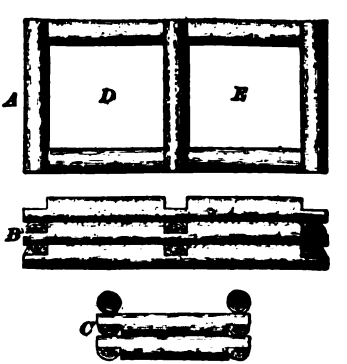

FIG. 107.

189. Cribbing for a Raise.—Raises are frequently cribbed, as illustrated by Fig. 107.

190. Timbering for a Shaft Station.—Shafts for metal mines differ from those for coal-mines on account of the fact that the material usually has to be hoisted from a

number of levels, and at these various levels, plats, stations, or landings have to be provided. On this account, the extensive shaft bottoms so common in coal-mines are rarely met with in metal mines, though with the use of double-deck cages, it may become necessary to provide two landing levels at each station where such cages are loaded. Fig. 108 illustrates one style of timbering used in opening out a landing from a shaft which has been timbered with square sets. The ordinary shaft timbering is carried to a point at the bottom of the proposed level, and here the large stulls shown at *a* are placed into hitches prepared in the sides of the shaft. The shaft and its timbering are then

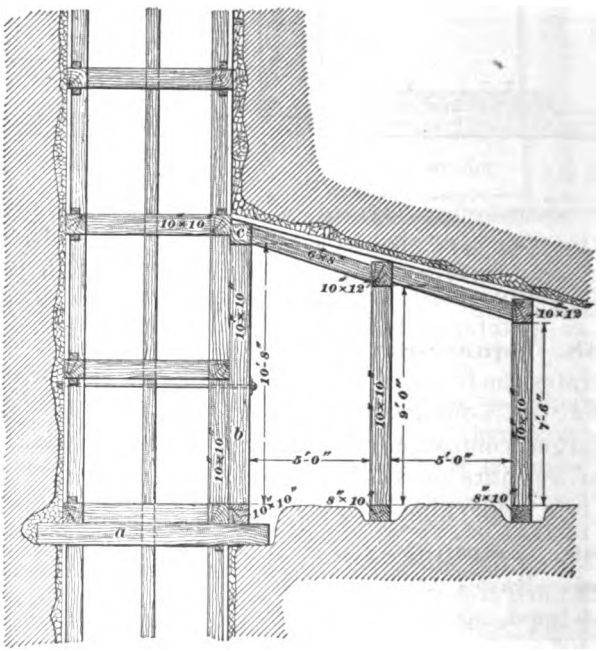

FIG. 108.

carried far enough to provide a good sump, or the sinking may continue to the next level. When the opening for the landing is started, it is necessary to remove the shaft lagging, if any has been placed, and after this a 10′ × 10′

post *b* is bolted against the shaft timbering at each side of the proposed opening, and another post is bolted against the regular posts between the hoisting compartments. A 10″ × 10″ cap *c* is then placed across the top of these posts, after which the portion of the wall-plate crossing the proposed opening may be sawed out. The station is then timbered as shown in the illustration, the height of the timbering being gradually brought down to that of the drift with which it connects. The advantages of this method of opening out are:

1. It is much easier to continue the shaft by means of the ordinary sets than it is to place special sets with long posts where the opening is desired. This is especially true when working in bad ground.

2. If it were desired to push the shaft on to the next level before commencing the opening, this portion of the shaft timbering would be exactly like all the rest; and if later it were found best to change the position of the proposed station, there would be little trouble in introducing the necessary stulls at the desired point and opening out the level in its new position.

191. Station in Inclined Shaft Timbered with Stulls.—Many metal mines use inclined shafts or slopes and hoist the ore by means of skips. In some cases the mining cars are dumped into the skips at different levels, as shown in Fig. 109, which illustrates a plat or landing in an inclined shaft where the formation is particularly strong and the shaft is small. The shaft timbering is composed simply of stulls *a*, no caps or lagging being employed. The plat or landing is also supported with stulls placed in hitches cut in the rock, and the car-track from the level is brought across the top or hanging-wall side of the shaft, as shown at *b*. The track for the skip is supported on stringers, which are fastened to cross-sills that are spiked to the upper side of the bottom of the stulls, as shown at *c*. The shaft illustrated is a two-compartment shaft, the total excavation

being 5 feet by 11 feet, one compartment being used as a hoistway and the other as a ladderway.

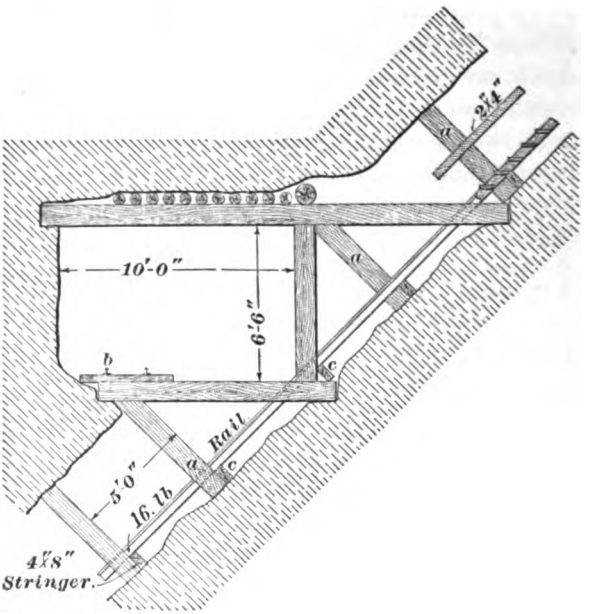

FIG. 109.

192. Timbering Pockets at Shaft Stations.—In some cases bins or pockets are provided at the levels and the mine-cars dumped into these bins or pockets, the skips in turn being filled from the pockets and dumping automatically into pockets at the surface. This method makes the tramming of the ore on any level independent of the hoisting for a limited time, for the pockets contain a sufficient amount of ore to supply the skip for a short time while the tram-cars may be idle; and, on the other hand, if the skip is engaged in serving other levels, the tram-cars can continue their work by dumping the ore into the pockets. Fig. 110 illustrates one method of timbering a plat and pocket. These pockets are generally arranged in such a manner that the mine-cars can come to them from both directions—that is, from drifts directly in front of the shaft, as at *a*, or from drifts at the

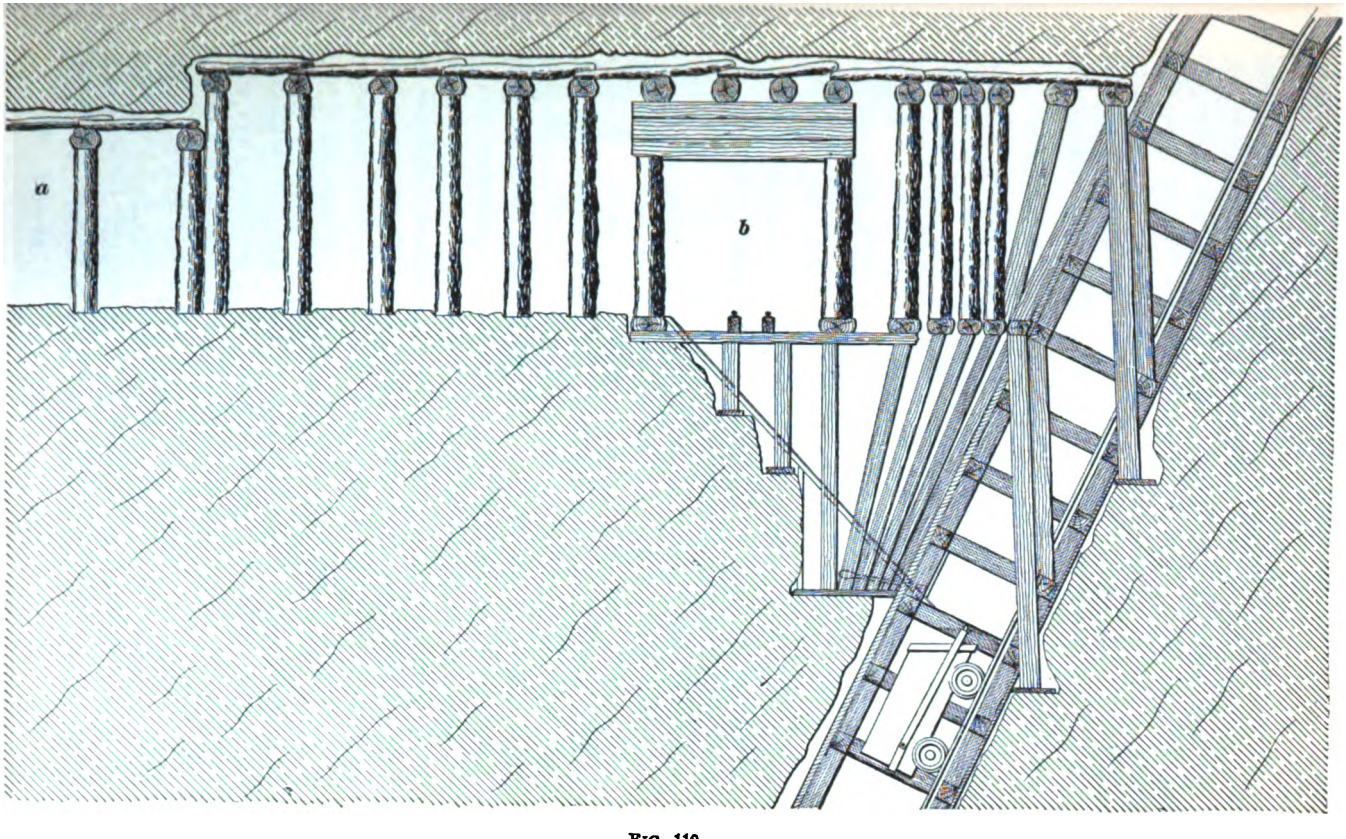

FIG. 110.

sides of the shaft, as at *b*. The timbering of these pocket stations has required a great deal of study, on account of the fact that in many cases the plat or station has to be very wide. In Fig. 110, it will be noticed that the cap over the drift *b* is composed of two 12″ × 12″ timbers and one 10″ × 12″, placed one on top of the other. This cap has to carry two of the main timbers supporting the roof of the station.

193. Taking Up the Timbering of an Upper Stope.—When the timbering of any stope is to be taken up on that of another, the task is made very much easier if raises are put through between the levels in advance of the regular stoping, these raises being timbered with regular square sets and the stoping being really the enlarging of the raises in various directions by removing the ore and adding other sets. When all the ore has been removed except that immediately under the upper stope, the timbers of one set in the upper stope may be blocked up and supported by long braces reaching to the adjoining sets, after which the block of ground below the set in question is removed and the timbering of the set itself supported from below. When a raise is not carried through and connected with the timbering above, it becomes practically impossible to guide the posts of the lower stope so that they will come directly under those of the upper stope, and on this account heavy sills have to be used under the timbers which are to be taken up. Where no raise has been put through in advance of the work, it becomes necessary to break through under the upper stope as carefully as possible.

194. Example of Taking Up the Timber of an Upper Stope.—Figs. 111 and 112 illustrate one method of taking up square-set timbering in one stope upon that of a lower stope. Fig. 112 is a longitudinal section at one side of the car-track, while Fig. 111 is a transverse section on the line *A B*, Fig. 112. *c*, *c* are the regular caps, *b*, *b* the regular legs, *a*, *a* the regular girts of the square-set timbering in the upper and lower stopes. After determining which set

is to be undermined, it may be supported by using long timbers *h* supported by posts *g*, which are placed at the ends *k* of the long timbers *h* and supported upon the regular sills *s*. Wedges are driven between the long timbers *h* and the cap which it is to support. This cap in turn supports the legs resting upon it. After the timbering has been secured in this manner, the ground between two stopes is carefully broken through and special posts *r* are set on top

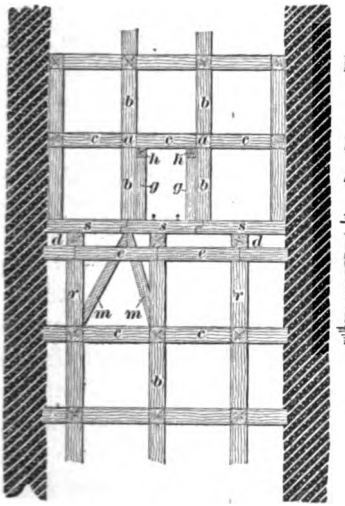

FIG. 111.

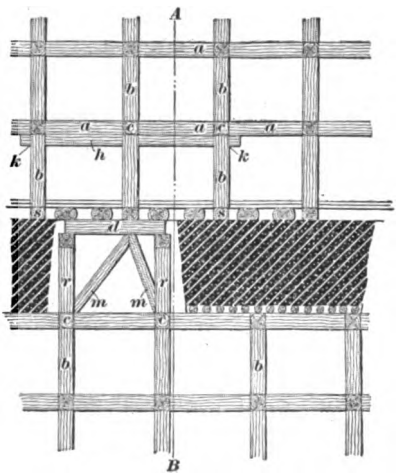

FIG. 112.

of the lower timbering, and stringers *d* are placed in such a way as to support the regular sills *s*. It frequently happens that, as in the illustration, the posts in the upper set do not come over the posts in the lower set, and in this case the point in the sill immediately below each post may be supported by four braces *m*, which are placed from the lower ends of the special posts *r* in such a manner as to support the sill directly under the post of the upper set. At times the caps *e* on top of the posts *r* are made very heavy, and special stringers *d* are placed across them and under the posts of the upper set, thus doing away with the diagonal braces *m*. After one or two lines of posts in the lower set

have come up under the upper set, the work of removing the block of ore immediately under the upper stope progresses with ease, the different timbers being successfully supported by means of the temporary timbers *h* and their posts *g*, and the railroad track and its ties being temporarily supported by means of short posts or braces as they are undermined.

195. Seasoning and Treating of Timber.—Timber for use in mines should always be cut at a season of the year when sap is down, and it is best to remove the bark and season the timber under shelter for some time before it is used in the mine. While seasoning, the timber should be protected from both rain and sun. Attempts have been made to coat mine timbering with some substance to prevent or retard its decay, and in other cases the timbering has been treated with chemicals with the same end in view. The objection to the use of creosote or tar for preserving mine timbering is that they make the timber more inflammable than it would otherwise be. Timbers are sometimes treated with solutions of the chlorides or the sulphates of the various metals. When a regular plant is installed for this work, timbers are first placed in specially prepared chambers from which the air is exhausted, and then the solution for preserving the timber is forced in under pressure, the exhausting of the air having reduced the pressure on the timber and opened the cells. After the preserving material enters the chamber, it is forced into the pores of the wood in such a manner as to thoroughly saturate it.

196. The expense of treating timber and the short life of untreated timber have led more and more to the use of methods which reduce the amount of timber necessary, as, for instance, the filling and caving method of mining. The decay of timbers in the main haulageways of a mine may be retarded by supplying them with an abundance of fresh air, and especially by keeping the timbers damp. Some mines in Europe have gone so far as to provide for spraying or watering the timbering.

197. Ladders, Stairs, Hand-Rails, etc.—Ladders, when used in a shaft, should never be placed perpendicularly if intended for constant use, but should be divided into comparatively short lengths and placed at an angle of about 80°. A convenient distance between rungs is 12 inches. Ladders are used when the pitch of a shaft is steeper than 60°; between 60° and 20° from the horizontal, stairs with hand-rails are employed; and from 20° down to the horizontal nothing is employed, or simply plank walks, which are sometimes provided with cleats to prevent the men from slipping. Where men have to pass in and out of an inclined raise for a limited time, they sometimes use a rope and walk or climb on the timbers of the raise while holding on to the rope. At other times the raise is provided with a bar or rail, which the men straddle and on to which they hold as they climb on the timbering.

METAL AND MASONRY.

198. Metal Supports.—Metal supports have not come into use very extensively in metal mines for several reasons:

(*a*) The large metal mines keep their shaft stations open but a short time compared with the pit bottoms of large coal-mines.

(*b*) The deposits in which the metal mines are located are more liable to be in motion than is the ground over the landing in a coal-mine, and if timbering is crushed it is very much easier to repair than are steel beams when badly bent or sprung.

(*c*) Waters of many metal mines dissolve iron and steel, and for this reason they can not be used underground. This is especially true of the large copper mines.

199. Masonry.—Both iron and masonry are quite extensively employed in Europe, and have been used to some extent in America. Masonry linings for drifts or tunnels primarily cost much more than timber linings, but if they are properly put in and are not subsequently subject to

irregular and unexpected pressures which crush them, they will never require repairs, and hence in the long run may be much cheaper than timbering. An essential point in walling with masonry is that the arch should be presented against the lines of special pressure.

200. Examples of Masonry Linings.—Arches may be made of either brick or stone. Fig. 113 illustrates an arch which has been sprung across a narrow vein to carry the broken material above, and in this case is practically a

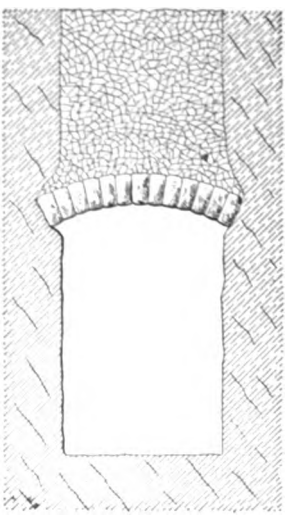

FIG. 113.

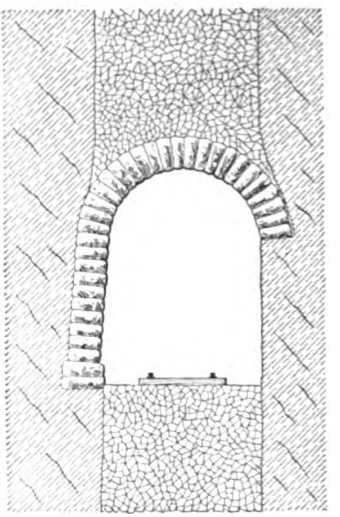

FIG. 114.

stull. Fig. 114 illustrates a similar arch, but in this case one wall of the vein is so soft that it required lining, and hence the masonry has been carried down on that side, as shown in the figure. Fig. 115 shows an elliptical masonry lining, and in this case the car-track is supported on timbering in such a manner as to leave the water-drain under the track.

201. Combined Masonry and Timber or Metal Linings.—Fig. 116 illustrates a method sometimes employed, which consists in building straight walls at the

sides of the drift or tunnel, and using either timber stulls or steel beams across the top of the walls to support the lagging

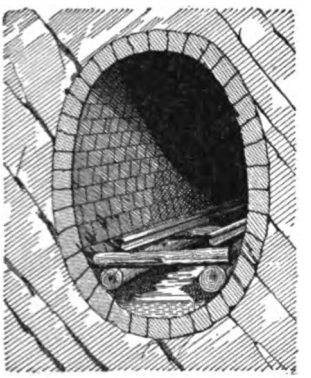

FIG. 115.

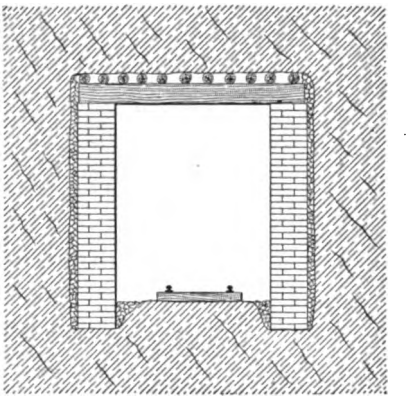

FIG. 116.

under the roof. The walls may be constructed of brick or stone laid up with cement, or they may be laid up dry with large, firm pieces of rock.

202. Steel Beams or Rails to Support Linings.—Fig. 117 illustrates one manner in which a steel beam may be bent to form an arch which supports the lagging in the drift or tunnel. The beam is divided at the top and spliced by means of a fish-plate. This is to facilitate the transportation of the pieces to the place where they are to be employed. For small drifts, pieces of old railroad rails are sometimes employed to support the lagging.

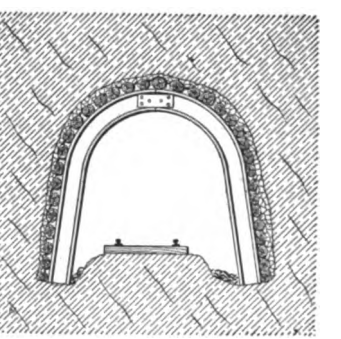

FIG. 117.

203. Cast-Iron Posts.—Fig. 118 illustrates a cast-iron column which has been used in some mines to replace posts

or stulls. It is composed of two pieces *a* and *b*, which are divided in the center by a diagonal cut, and are held together by the collar *c*. If it is desired to remove the post or stull, the collar is simply driven down past the diagonal cut, when the stull will fall out of itself. The pieces *a* and *b* are often connected by a loose chain, so that in transporting the column from one place to another they will not become separated.

FIG. 118.

204. Example of Masonry Pillars. — In the "Tilly Foster" mine in New York State, an attempt was made to build artificial pillars in the rooms in such a manner as to support the hanging wall. These pillars are illustrated in Fig. 119. They were composed of flat, brick arches, which supported a mass of concrete that was intended for the pillar proper. It was discovered that they were not of sufficient strength to carry the hanging wall, and hence they had to be removed and the mine worked as an open pit. After the floors and portions of the ore above these artificial pillars had been removed, they were exposed, and Fig. 119 is taken from a photograph made after the pillars were exposed to daylight. Sometimes brick or masonry pillars are used in much the same manner that the timber pillars or cribs illustrated in Fig. 102 were employed. These may be either square, solid pillars of masonry or long masonry walls taking the place of chain pillars.

205. General Remarks.—There is no reason why steel shapes or masonry lining can not be used to advantage in some metal mines, and their use will undoubtedly become much more common within the next few years in the metal mines as it has among some of the coal-mines; but in each case the arches or metal supports will have to be designed

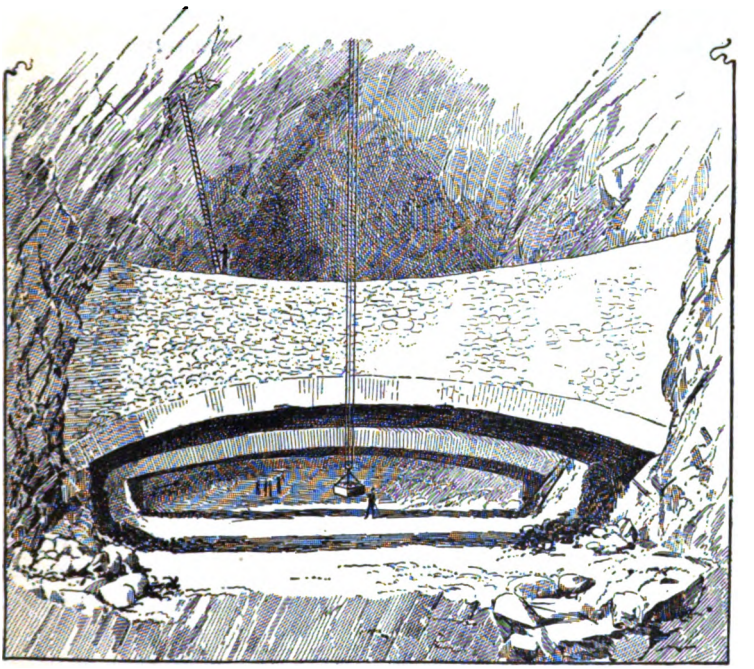

FIG. 119.

to suit the case in hand, and hence the engineer will have to be guided by local conditions in all this work.

VENTILATION OF METAL MINES.

206. Importance of Ventilation.—The ventilation of metal mines does not present the same difficulties met with in collieries, for the rock formations rarely contain or give off gases. It is very rare in the case of metal mines that air has to be forced through the mine simply to drive out explosive or other gases. Refined measurements as to volumes or velocities of the ventilating currents in metal mines are rarely considered necessary.

The importance of ventilation in metal mines increases with the number of men employed and with the length of the workings. For instance, in driving long tunnels, it is

impossible to ventilate them by natural means, and some method of artificial ventilation must be resorted to.

207. Causes of Air Vitiation.—In metal mines, the causes of air vitiation may be considered under the following heads: Respiration of men; gases given off by the lights; gases resulting from blasting; and miscellaneous causes.

208. Respiration of Men.— In breathing, men absorb oxygen and produce carbonic acid gas; their bodies also give off exhalations of other organic gases. Men doing hard manual labor as miners require more air than is allowed per person when figuring on the ventilation of halls, schools, theaters, etc.; hence the rules used in such cases become useless when applied to problems in mine ventilation. The average man when engaged in hard work requires about 20 cubic feet of free air per minute, and the horse 90 cubic feet per minute. If ventilating machinery is necessary, these figures will do for calculating the amount of air necessary to deliver per man or per animal in use. The amount consumed by the lights depends to a large extent upon the character of the lights employed and upon whether the combustion is perfect or not. The lights may require more than the men do, or they may require considerably less. Owing to the fact that actively poisonous gases are not often met with in metal mines, and that animals are rarely put underground, the metal miner often gets along with much less than 20 cubic feet of air per minute.

209. Gases Resulting from the Lights.—When lights (either candles or lamps) do not smoke, the gas produced is practically all carbonic acid gas. The lights may produce from two to four times as much of this gas as that produced by the breathing of the men, hence in some cases more fresh air must be provided for the use of the lights than for the men. Oil lights often smoke, and this smoke is more objectionable than the gases produced by the lights.

Candles are used in most metal mines, though lamps may be required where large stopes are being worked.

By using electric lights the amount of fresh air necessary for a given number of workmen will be materially decreased.

Safety-lamps are rarely, if ever, required in metal mines.

210. Effect of Explosives.—The foul air that is produced by the burning of the explosives is by far the most serious factor that enters into the problem of ventilating metal mines. Ordinarily the miners have to wait for the smoke to drift away from the point where the blast was fired or to slowly diffuse itself through the air in the mines.

Black powder produces less objectionable gases than those resulting from the use of giant powder (dynamite) or any of the nitroglycerin derivatives. All explosives give off a greater or less amount of foul gas, and where the explosive is imperfectly burned, the gases produced are far worse than those resulting from a perfect explosion. It occasionally becomes necessary to experiment before the mine authorities can determine which explosive will give the best results for their mines. Ordinary gases given off from the explosives are carbonic acid gas, nitrogen gas, carbon monoxide gas, and hydrogen gas. Some of the high explosives give other compounds. The carbonic acid gas is the product of the combustion of the lights, and also results from the breathing of the men. Nitrogen is the inert gas in the atmosphere, and neither it nor the carbonic acid gas is poisonous, though neither of them will support life. The carbon monoxide gas is a highly poisonous compound, and the hydrogen is, if anything, slightly poisonous. If an explosive produces nothing but carbon dioxide and nitrogen, its gas is the least objectionable, and those explosives which produce the maximum amount of carbon monoxide gas are the most objectionable. Some explosives also produce various sulphur gases or fumes.

211. Dust.—Metal mines are more likely to be very wet than too dry, but there are some that are very dry. The dust resulting from the handling of ore, from drilling and from blasting is liable to be very sharp and injurious to the lungs of the workmen. If not artificially produced

chemically. For its removal, it must either be damped down by means of water or removed quickly by currents of air. The dust of mines may be actively poisonous, as that found in lead carbonate ores, arsenical and antimonial gold and silver ores, cinnabar, etc. Such dust may be removed by good ventilation. The upper levels of a mine may be originally dry, but the working of the lower levels may drain them so thoroughly as to render them quite dusty.

212. Decay of Timbers.—Another cause to be considered under this head is the decay of timbers. This is not only a deoxidizing effect, with the evolution of carbonic acid gas, but the timber may putrefy, resulting in the emanation of various noxious gases. This putrefying effect is often called dry rot, and the stripping of the bark from round timbers is thought by some to delay this action. When timbers left in an old mine decay, they have been known to produce explosive gases, and upon breaking through into the workings, these gases have rushed in upon the miners, sometimes producing disastrous explosions.

213. Explosive Gases.—Marsh-gas (the principal constituent of the firedamp of collieries) is the most important explosive gas met with in the mines. It is derived from the decomposition of carbonaceous matter (not necessarily coal, but, as stated above, might be derived from old timbers or other similar matter). This gas may accumulate in the interstices of the rocks, and subsequently in the openings of the mine, in sufficient quantities to produce an explosion when ignited. Explosive gases are not usually looked for or provided against in metal mines, and yet there are a number of disastrous explosions on record.

214. Miscellaneous Causes.—Among the other causes that may be mentioned for vitiating the air are the carbonic acid gases which may be given off from the ground itself, especially in lead or zinc mines or in limestone regions, the vapors from the exhaust of steam machinery used underground or that leak from steam-pipes, and occasionally poisonous gases, such as compounds of sulphur,

phosphorus, or arsenic with hydrogen, which may come from the rock formation.

215. Underground Temperature.—Below the surface of the earth the temperature gradually rises. This rate of increase has been variously estimated, and was formerly stated at 1° F. for every 55 feet of descent. But later observations have shown that the increase is generally much less rapid, and 1° to 70 feet would be considered a sharp rise. Of course there are exceptions to the rule, and some workings in regions which have been subjected to volcanic action, or which contain hot springs, may be extremely hot at comparatively shallow depths.

216. Men have already mined with a rock and water temperature of 150° F., but they had to be supplied with an abundance of fresh air. In extreme cases, the intake pipes have passed through ice water (as, for instance, at the Consolidated Virginia mine in Nevada).

217. The temperature of shallow mines, if not raised artificially, is cooler in summer than that of the surface, and warmer than the surface in cold weather; usually it is only at considerable depths that the temperature is higher than the surface all the year round. Where there are marked changes of surface temperature between day and night, it often happens that at night the air in the mines is warmer than the surface, while during the daytime the reverse is the case. All these facts have an important bearing on the natural or artificial ventilation of metal mines.

218. Natural Ventilation.—In the great majority of metal mines, natural ventilation is depended upon entirely, and in small mines it is often allowed to take care of itself, although the adoption of simple, cheap arrangements for controlling the natural currents would greatly improve the conditions. As workings are extended, connections are made for developing the ground or for convenience of handling ore waste and water, and these can be used to assist in ventilation. Where mines have a surface

plant of machinery for hoisting, air-compressors and power drills are usually employed, and the exhaust from the drills furnishes sufficient air for ventilating the workings. Even when starting a mine in ordinary rock, without knowing in advance to what extent the workings are to be carried, a small compressor plant is sometimes set up so that the use of air-drills may expedite the work of development. It is usually best to avoid putting in fans or blowers, together with the connecting pipes, unless this becomes absolutely imperative. This is especially true in a case where the mine has no other machinery.

219. General Principles.—The theory of mine ventilation is very simple, and is based upon the following principles:

1. Air heated above the temperature of the surrounding atmosphere at a given level has a tendency to rise, to become expanded, and to be therefore lighter; cooler air sinks for the opposite reason.

2. Diffusion is the tendency of two or more gases of different densities, but originally of like temperatures, to become uniformly mixed, without regard to difference in weight.

3. Convection is the tendency of currents of different temperatures to seek an equilibrium of temperature, and in the circulation thus produced to approach to uniformity of temperature within a closed space.

The first principle explains the movement of the main currents in the mine, for the air becoming warmer has a tendency to rise and so draw in a supply of colder air from some other source; and the greater the differences in temperature the more rapid will be these main ventilating currents. Diffusion and convection together explain why powder smoke and foul air, in the absence of appreciable ventilating currents, slowly become diluted through the mine air, so that while the whole body of air is vitiated, that at the place where the blast was fired or the foul air produced becomes in time diluted enough to be breathed.

220. Simple Tests.—The direction of the air-currents not otherwise perceptible in horizontal workings may be ascertained by observing the flame of a candle. In a drift, the candle should first be placed on the floor, to test the lower current, and then fixed near the roof, to test the upper current. The velocity of the current can be found by burning a little powder at one point; a second observer at, say, 100 feet away observes the time required for the smoke to reach him. The time required for fumes from a blast to reach a given point may also be noted.

221. Unconnected Workings.—It might be thought that there was no chance for ventilation in the case of unconnected workings, but so small are the differences required to set up a current that wherever work is going on the air is not absolutely dead. At the heading of a tunnel, air is heated by the burning of the lights and the animal heat of the men. This air rises to the roof, drawing in cooler air at the bottom to replace it, and if the tunnel is not too long there will be a gentle outward flow along the roof to the mouth of the tunnel and an inward flow along the floor. This, for a certain distance, may suffice. When, however, the up grade of a tunnel places the heading too far above the mouth, this movement is stopped and the air at the face becomes permanently bad, requiring artificial or assisted ventilation.

222. Tunnel Connected with a Shaft.—Fig. 120 illustrates a shaft connected with the tunnel. If the temperature of the mine is above that of the atmosphere, the air will have a tendency to flow from *a* in through the tunnel to *b*, and becoming heated, and so expanding, will rise through the shaft from *b* to *c*. When the temperature of the atmosphere is above that of the mine, the currents will be reversed and will flow from *c* down to *b* and out at *a*. The direction of the current would have been the same if in place of the tunnel there had been a shaft at *a* connected with the shaft *c b* by a drift at some distance below the surface. In other words, if there were no other factors entering

into the problem, when the temperature of the mine was above that of the atmosphere, the current would always flow in at the lowest point and out at the highest, and a

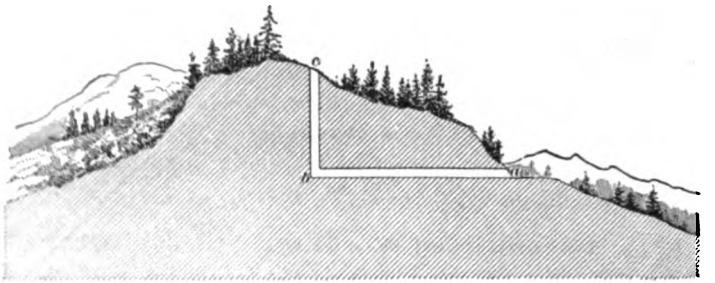

FIG. 120.

reversal of the conditions as to temperature would reverse the current. Unfortunately, there are many other factors that enter into the problem, and an engineer who has planned the connections with a view of having the shaft through which the men pass in and out the downcast and the other shaft the upcast may be disappointed by finding the conditions reversed. This does not argue ignorance of the laws of physics or signify that there is any mystery about the principles, but only that, in a problem of much delicacy, the necessary data is not always obtainable with precision. This difficulty, instead of discouraging the projector, should stimulate him to make the most careful observations and inferences before planning new connections for ventilation.

223. Advantages of Having Men Pass Through a Downcast.—In most cases it does not make much difference in which direction the current moves, providing the volume and velocity are sufficient. It is desirable, however, to have the shaft through which the men pass a downcast, so that in passing to and from their work they may always be in fresh air. It is also desirable that the fresh outer air be led as directly as possible to the working places, leaving the mine air to find its way out through the unused workings

224. Case When Men Should Pass Through Upcast.—When men are hoisted through an inclined shaft in special carriages, the hoisting shaft must be an upcast during the winter, for were it a downcast icicles might form on the roof between the hoisting periods and thus might injure the men as the carriage passed under them. On this account, some mines which use this method of hoisting make provision for the building of fires in the upper levels near the top of the shaft through which the men are hoisted, and by this means warm the air and thus make sure that the current will always be an ascending one.

225. Disturbing Influences.—The wind may exert a disturbing influence upon the direction of the ventilating current; for instance, a high wind striking in at the mouth of a tunnel or deflected down a shaft by a hillside or by buildings may cause the air-current to be reversed.

The heat from the underground engines, steam-pipes, etc., causes local disturbances of temperature, which generally assist ventilation, though in rare cases it may retard it.

The movement of cages, cars, pump-rods, balance-bobs, etc., and of rock in chutes, also has, on the whole, a beneficial effect, though a stationary cage or car may temporarily block the circulation.

"ASSISTED" NATURAL VENTILATION.

226. There are several ways in which natural ventilation may be accelerated and properly distributed without much expense or trouble. The most common of these are for governing the currents.

227. Sollars.—These are horizontal partitions in drifts or along main galleries by which the heated air from the working face is led out to the tunnel mouth or discharged into an upcast shaft. They are made of lagging or boards and are placed rather close to the roof. They assist the air movement, but have great disadvantages, and hence are seldom used in metal mines. Some of the disadvantages are as follows:

1. They require additional headroom, which means the excavation of a drift or gallery considerably higher than otherwise needed, together with the extra expense for labor, explosives, and additional length of props.

2. When sets are so constructed, they are difficult to place.

3. The introduction of any woodwork besides that actually needed as timber supports, and especially woodwork of such light and inflammable character and in such an exposed position, is to be avoided on account of the danger of fire. The wood has every opportunity for drying out and becoming ignited on small provocation. Fig. 121 illustrates a drift having a sollar formed by putting a brace *b* below the regular cap *c* and placing a floor on top of the braces *b*, thus providing the space *a*, which is the sollar through which the heated air from the mine flows out.

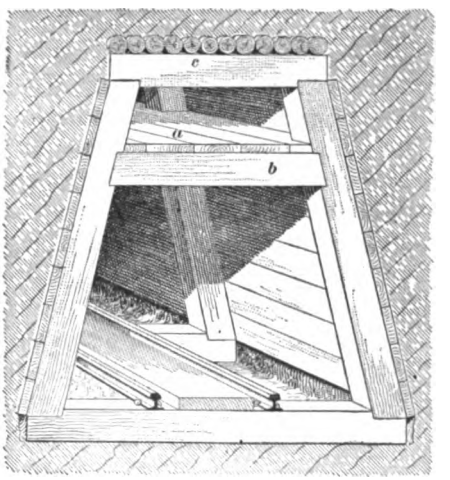

FIG. 121.

228. There are also bottom sollars along the floor of the drift or gallery. If constructed for the sake of ventilation, they are as objectionable as the others, but when constructed in connection with the water-drain, they may be tolerated. In such a case, however, the current of air passing in would have to oppose the current of water passing out.

229. Brattices.—Brattices are vertical partitions extending along and near one side of a gallery or drift. (If

the passage is wide, the brattice may be in the center.) They are made of boards or cloth, and to prevent the cloth from rotting it is usually tarred. Brattices make another dangerous fire risk and also require a large amount of space, hence they do not find favor in metal mines.

230. Wooden Air-Boxes. — Wooden air-boxes are sometimes employed and are much better than brattices or sollars. They are roughly made and do not have to be absolutely air-tight. They are usually placed in the upper corner of a drift or in the water-drain. Their use adds another fire risk, but not to such an extent as when brattices are employed.

231. Metal Piping.—Pipes of thin metal (either tin or galvanized iron) are sometimes used. They can be round or rectangular in section.

232. Large Cloth Hose.—Air-passages are sometimes afforded by the use of hose made from canvas or other fabric, but with natural ventilation the cross-section has to be made so large that they are not much used.

233. Air Doors.—These are not used in metal mines to such an extent as collieries, but when a mine has two shafts connected by a number of levels, air doors are necessary to prevent the air-currents from cross-cutting through the upper levels, and so leaving the lower workings unventilated. Air doors may be made of boards or plank, fitting closely to a frame or timber support, and they should always be self-closing. A simple arrangement is to hang a curtain of canvas across the gallery.

234. Lined Shaft Compartments.—When men are hoisted on cages, it is considered safer to line the shaft compartments with boards or plank, which are usually set vertically with butt joints; but when the hoisting shaft is also used for ventilating, this has decided disadvantages. In

cases of cage accidents, or when it was desired to pass from the cage compartment to another portion of the shaft, as to the water column (for inspection or repair work), it is more convenient to have no lining inside of the shaft timbers, and this is the usual custom in metal mines. When there are several compartments for hoisting, they are usually unlined. The compartment containing the water column, steam-pipes, etc., is frequently lined and used as an upcast, the air passing down through the hoisting compartments. When this is done, air doors would be needed at the stations, and especially at the bottom level.

235. Chimneys.—If an upcast does not draw well and it would not interfere with any other use to be made of the shaft, a chimney of some sort can be built on its collar and carried up to the necessary height, which need not be very great.

236. Housed Shafts.—When a shaft has a house built over it to protect the men and machinery from severe winter weather, the mine ventilation should not be overlooked. If the shaft is an upcast, there should be a hood, belfry, or cupola-like structure in the top of the shaft house to allow free escape of the mine air and vapor; if it is a downcast, the air admitted should be fresh and free from smoke or dust.

237. Wind-Sails.—Fresh air may be forced to the bottom of a shaft of moderate depth by setting up funnel-shaped ventilators which can be turned to face the wind, and connecting them with the shaft bottom by means of pipes or large canvas hose. This is a simple and convenient makeshift to use while sinking uncovered shafts 100 or 200 feet deep.

238. Effects of Water Upon Ventilation.—When a mine is wet, the water may assist in its ventilation. For instance, if more or less water is dripping down a shaft, the upcast may be lined and the water kept from passing down through it. The water dripping down the other compart-

ments of the shaft will have a tendency to carry air with it, thus creating a current down the hoisting compartments and up through the compartment which is lined. When sinking in advance of regular mine work, whatever water has a tendency to flow down through the shaft may be confined in a wooden box or launder, and if this is made of sufficient size, the current of water will carry air with it, thus ventilating the bottom of the shaft. If water is allowed to flow from one level of a mine to another, the downward flow can be confined to the winzes or shafts which are intended as downcasts, the upward current of air passing through other openings. In this way the falling water can be made to assist in the ventilation of a mine.

239. In some formations water carries more or less air in solution, and this also assists in the ventilation of the mine.

240. Advantages and Disadvantages of Natural Ventilation.—Wherever it is practicable to get along without the use of blowing or suction machinery, the metal miner will inevitably do so.

Natural ventilation has these advantages: (1) It costs nothing after the connections are once made; (2) it takes care of itself for the most part. It has these disadvantages: (1) It is often insufficient; (2) it is not always reliable, fluctuating with the weather, the time of day, the wind, and artificial disturbing causes; (3) while it costs nothing for maintenance, it may require a considerable initial outlay in making connections or sinking (or raising) air-shafts which would not otherwise be needed. As against this latter point, it may be remarked that most of the work in developing fits in with that done to gain air connections and *vice versa*.

241. All metal mines are started on the basis of natural ventilation. When that becomes unsatisfactory, the various "assisting" expedients come into play. Finally, if there is no other course, the management will have to turn to means of artificial ventilation.

ARTIFICIAL MEANS OF VENTILATION.

242. Trompe.—When natural draft (assisted by simple means) is insufficient, metal mines require artificial ventilation. In some regions ventilation has been secured by the use of a **trompe,** or **water-fall ventilator.** This is illustrated by Fig. 122, in which *W* represents the water flowing through the trough *L* on to the screen *G*. This screen breaks the water up into a shower of drops or fine streams, which fall upon the dashboards *D*, *D*, *D*. This shower of water being deflected from one dashboard to another becomes beaten into a spray, and in its descent draws air through the openings *A*, *A*, *A*. After leaving the last dashboard, the water falls through the remainder of the tube to the trap *W T*, from which it overflows and escapes. During this long fall the water acquires a considerable velocity, causes a vacuum behind it, and compresses the air before it, thus causing rapid currents in through the openings *A* and out through the discharge-pipe *V*. While the trompe is not used in many American metal mines, the principle is of great assistance in the ventilation of mines, for, as has been stated, by causing the mine waters (on their way to the pump levels) to pass through certain compartments in the shafts or through certain small shafts, these can be made downcasts, and by keeping the water from passing through similar compartments or shafts, they will become the upcasts.

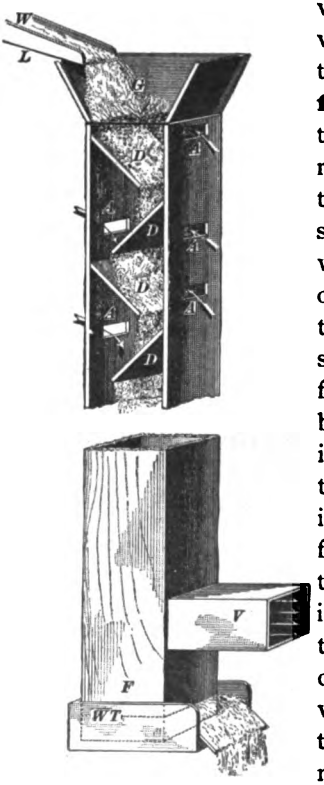

FIG. 122.

243. Furnaces.—Furnaces are not used in many metal mines. They are dangerous, even where little timber is employed, and have never become popular.

244. Hartz and Cornish Water-Blowers.—These are really a form of air-pumps, usually connected to Cornish pump-rods or to a special operating mechanism. They are cumbersome and require a great deal of space, hence are not used in many metal mines.

245. Classes of Machines in Use.—Machines used for ventilating metal mines may be divided into three classes: (1) Compressors; (2) blowers; (3) fans.

246. Compressors.—Compressors are never installed for ventilating purposes only, but when used for driving air-drills or other underground machinery, they furnish a large amount of pure air to the workings, and may thus be considered as ventilating machines. Then, again, when air-pipes are in use in a mine, branches may be taken from these pipes to ventilate certain sections or portions where the drills or other machinery driven by compressed air are not in use. Although the air-pipe is small, it carries a great deal of air (measured by its expanding volume at atmospheric pressure). The delivery at the drills is usually about 70 pounds per square inch, and when this air is released it expands, becoming cooler, which has the advantage of reducing the temperature at the working face. At times, when the drills are not running, a small amount of air may be allowed to pass through the air hose, thus furnishing the men with the necessary ventilation; and when powder smoke is to be removed, the full head of air may be turned on for a few moments.

247. Blowers. — The best blowers produce higher pressures than are required for ventilation, running up to 10 pounds per square inch, whereas for ventilation the pressures required are measured in ounces or in inches of water.

Blowers are of two general classes, rotary and reciprocating. Reciprocating blowers are really large compressors working at low pressure, and are rarely used for mine ventilation. The positive rotary blowers take in and discharge a given amount of air at each revolution. Fig. 123 illustrates one of this type. *A* is the pulley by means of which the

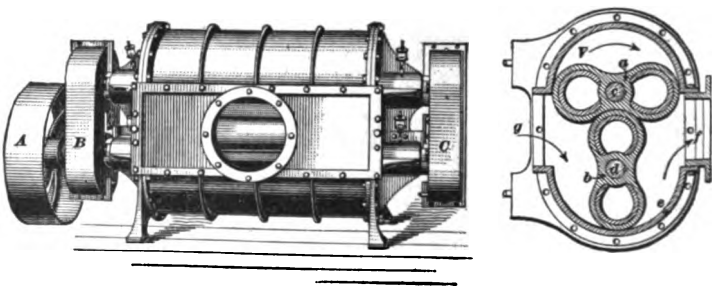

FIG. 123.

machine is driven; *B* and *C* are two cases containing gears which drive the upper blower shaft from the lower one; *a* and *b* are the impellers or veins which rotate about the shafts *c* and *d* in such a manner as to draw the air in at *g* and drive it out at *f*, as shown by the arrows; *e* is the cast-iron case surrounding the impellers. The impellers do not come in contact with each other or with the case, but are simply a close working fit, the two shafts being kept in the proper relation by means of the gears in the cases *B* and *C*. *V* shows the direction of rotation of the shaft *c* and also the direction of the air-current. This style of machine is especially useful where it is desired to furnish a given amount of air at a certain point in the workings (usually a long distance from the blower). Blowers of this class have been used for the ventilation of tunnels, as, for instance, the Ontario Drainage Tunnel No. 2. (See Fig. 47, Art. **137,** *Preliminary Operations at Metal Mines.*)

248. In this case the air-pipe was carried into the face of the tunnel and the blower could be operated either to drive fresh air in or to suck out the gases resulting from blasting.

249. These positive blowers have the advantage that they can drive a large amount of air through a comparatively small pipe, on account of the pressure they can produce. There are a number of patterns of positive blowers, all constructed upon the same principle.

250. Fans. — American practice in the mechanical ventilation of metal mines varies widely from English and Continental methods. Abroad they adhere to the large low-pressure centrifugal fans, of which the Guibal is a well-known type. These large fans are well suited to collieries, as they handle great volumes of air at low pressure. They are usually run as exhausts and without underground pipes, being placed at the side of a shaft mouth, from which they suck out the air. Some fans of this class are as much as 50 feet in diameter, and the medium sizes would be regarded as clumsy and unnecessarily cumbrous at most metal mines. They are run at relatively low speeds. A few of these large fans are seen in American metal mines, but preference is given to the small high-speed fans. At metal mines, fans are used more frequently than blowers, and some of them develop pressures or vacuums comparable with blowers, and hence are effective for the longest distances reached by mining.

251. Classes of Fans.—As to mode of action, there are two main divisions of fans—centrifugal and propeller. The former class is much more important.

252. A simple apparatus like the paddle-wheel of a side-wheel steamboat, on being rapidly rotated, would produce a tangential movement of the air by centrifugal force, the outgoing air being replaced by air drawn in at the center. This principle is taken advantage of by a multitude of devices giving improved efficiency over that obtained by merely beating the air with plain flat radial blades or vanes. The propeller class act on the principle of the small ventilators used in buildings, are run open, and drive the air through them.

253. Small Fan.—Fig. 124 illustrates a small fan having an electric motor placed inside of the fan. Machines of this style are especially adapted for working in comparatively close quarters and for delivering air to some portion of a mine which could not be reached by natural ventilation.

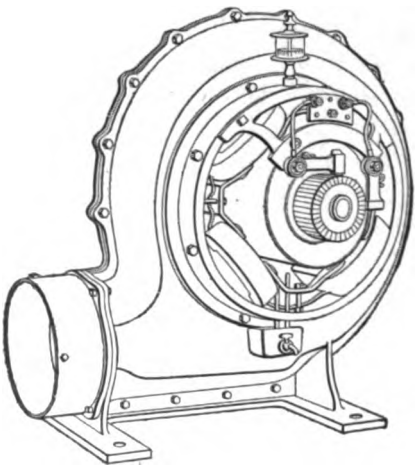

FIG. 124.

254. Methods of Furnishing Air to Isolated Places.—For furnishing air to workmen at the tops of raises, or in rooms which the ordinary ventilation could not reach, small fans are sometimes placed at various points in the mine which take air from the intake of the mine and force it to these unventilated workings. These fans may be driven by hand or by the mine waters, which are made to run small water-wheels as they pass from one level to another. Fans driven by electric motors may also be used for this purpose. Some mines which are working deposits extending over considerable territory in one direction (as the drift gravel mines of California) employ blowers which force the air through the tunnel and to the working face. When more than one working face is being operated, the air-pipe may be branched and part of the supply carried to each face. By this means the workmen are always supplied with good fresh air.

MINE SANITATION.

255. Divisions.—This may be considered under two heads: underground and surface sanitation, or sanitary measures.

UNDERGROUND PRECAUTIONS.

256. Air.—The most important factor in mine sanitation is the air which the men breathe. The methods of securing pure air have been considered under the head of "Ventilation of Metal Mines."

257. Water.—Next in importance after pure air is the water which the miner drinks. In many mines the natural waters flowing into the mine are unfit for drinking, either on account of the chemicals which they contain or because they may be largely surface waters, carrying more or less sewerage from the mining location. In either case, the miner should never be allowed to drink the underground waters, but should be provided with fresh and pure drinking water.

258. Powder Smoke.—Powder smoke is also an important factor in mine sanitation. The gases produced by some forms of high explosive are very injurious to the health of the miners. On this account the mining authorities should procure the least objectionable explosive that will suit the conditions occurring in the mine. This precaution is especially necessary when men are forced to carry on work where there is no natural or artificial ventilation, as at the head of a raise or at the end of a prospecting tunnel.

259. Animal Filth.—The presence of animal filth in the working should never be allowed under any conditions, and sinks or special provisions should be made for it. These should be placed in the upcast or return airway, and should be so constructed that the tubs can be brought to the surface and cleaned every few days. This is one of the most important points in regard to mine sanitation, and should never be neglected.

SURFACE PRECAUTIONS.

260. Change House.—After the miners come from work, they should always change their wet clothes and take a bath. For this purpose the mine should provide a dry or change house. This may be a separate building, provision being made for drying the clothes either by steam heat or by stoves. The change house and its baths should always be kept in good order and as clean as possible. Lockers should be provided for the men to keep their surface clothes in, and an attendant should always be in charge of the house. This change house should never be allowed to become a loafing or smoking place.

261. Sanitary Arrangements at the Mine Location.—If the mine owns the houses in which the men live, these should be so placed that they will have a good, natural drainage, and if this is not the case, sewers or drains should be provided. Care should be taken in regard to the water-supply for the mine location, as imperfect drainage or an impure water-supply may bring sickness and disease among the miners, which would more than counterbalance the expense of providing good surface arrangements.

262. Remarks.—Though the miner's work is largely of such a nature as to undermine his health, nevertheless there are certain extenuating circumstances. (1) The necessity of their taking a bath every time that they come from the workings has the effect of keeping the workmen clean, and undoubtedly is conducive to a better state of health. (2) Most mines are in locations where the air is fresh and pure and the water-supply good. These factors also assist in preserving the health of the men and their families.

SURFACE ARRANGEMENTS AT METAL MINES.

INTRODUCTORY.

1. All improvements at metal mines have for their ultimate object the removing and treating of the ore in the most expeditious and economical manner possible. The surface improvements are necessarily varied, not only to suit the ore and the intended output, but on account of the location and character of the country as regards topography, water and fuel supply, climate, etc. On this account it is impossible to give a general description that will apply to all metal mines, but the principles which underlie the improvements necessary at the different styles of mines can be discussed.

2. The majority of mines are opened in a small way, or at least with little machinery, large plants being rarely seen until the mine has been proved by actual work of development to contain extensive bodies of ore. During the first stages of work at a mine, it is best to employ only such machinery as will perform the service most economically and at the same time safely. But while working in a small way, due consideration must be given to future possibilities and probabilities; otherwise, any enlargement of the plant is liable to be upon an undesirable plan or unduly expensive. Comparatively few mines become large, but a great number of them ultimately require larger plants than are used in their early history.

3. The present tendency at metal mines is to work lower grade deposits than could be handled with a profit a

For notice of the copyright, see page immediately following the title page.

few years ago. This necessitates the handling of larger masses in order to make a profit, thus forcing the operators to look to the minor expenses, such as steam and fuel economy, hoisting in balance, etc.

4. Divisions of the Subject.—The various structures or improvements necessary at metal mines may be considered under the following heads:

1. Arrangement of hoisting plant, head-frames, pockets, bins, etc.

2. Transportation of ore and supplies.

3. Timber-yard and means for handling and preparing the timber.

4. Power and light plant and the transmission of power.

5. Plant for preparing or treating the ore.

6. General arrangement of buildings necessary for the prosecution of the work, and methods of framing structures.

ARRANGEMENT OF HOISTING PLANT, HEAD-FRAMES, POCKETS, BINS, ETC.

5. There are two systems of arranging the hoisting machinery at a mine: Individual and central plants.

6. Individual Plants.—In this system each shaft has its own equipment, which is usually situated in the same building with the pumping machinery, boiler plant, and shaft head, the entire arrangement being called the hoisting works. Fig. 1 illustrates such a plant. Where this system is used, the shaft may have a large and continuous output, in which case the engineer will be required at his engines during the entire hoisting period, while the fireman or a helper looks after the machinery and air-compressors and does the wiping and cleaning of the hoisting-engines.

7. In small mines, especially where there is only one hoisting compartment, and the hoisting is more or less

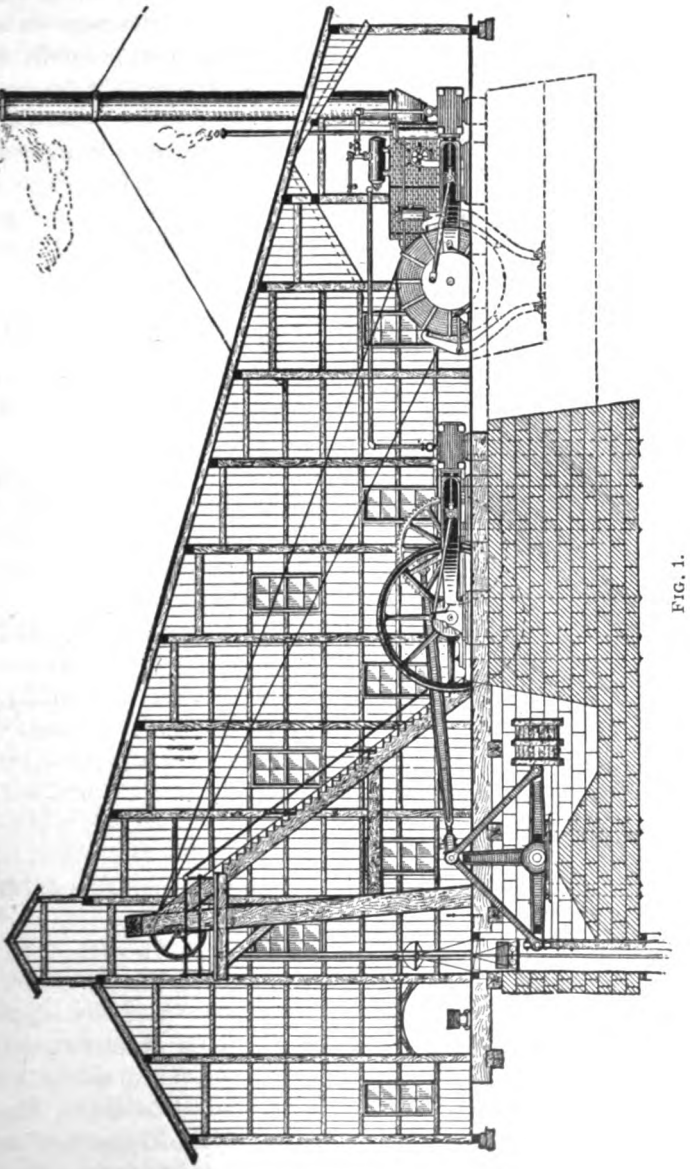

FIG. 1.

intermittent, it may be possible for one man to do the firing and run the engine. When this is the case, the engines and boilers should be located as near together as possible, and in such relative positions that the engineer can see his boiler and steam-gauge while standing at the engine, and can see the hoisting indicator and engine while standing at the boiler. It is also desirable to make the distance to be traveled between the boiler and the engine as small as possible, thus reducing the work to be done.

8. Central Plant.—The other general class of arrangement for the hoisting plant consists in placing a

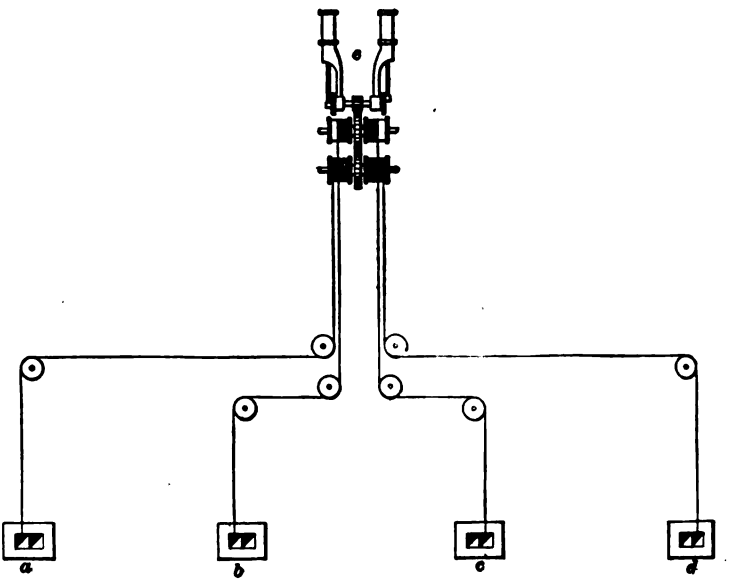

FIG. 2.

number of drums in one building and carrying the ropes to the various shaft heads. This system is especially applicable to mines where the output from the different shafts is more or less irregular, and where most of the shafts have but a single cage or skip which works out of balance. Fig. 2 illustrates a plant laid out on this line. There are four shafts, *a*, *b*, *c*, and *d*, which are operated by drums placed

at *c*. One advantage of this system is, that in the case of fire at one of the shaft-houses, there is no danger of the machinery being destroyed. The engine-house should be constructed as nearly fireproof as possible. This system is also useful where ropes are carried down the shafts or through bore-holes into the mine to do the hoisting in underground shafts.

9. Reasons for the Use of Individual Plants.—The desire to hoist in balance and to economize in fuel results in the use of more individual plants especially designed to work two compartments of a shaft, and in some cases has led to the introduction of special three-drum plants, having two drums for the operation of skips which hoist the ore and which work in balance, the third drum operating the cage in a separate compartment and being employed simply for hoisting the men and handling timber. It is well to have the hoisting plant so located that the engineer can see the shaft head or collar.

10. Head-Frames.—Head-frames are discussed, with reference to the strains caused by the hoisting rope, in *Hoisting and Hoisting Appliances*, but other facts enter into the case which complicate the form of head-frame. Among these complicating factors may be mentioned the provision in the head-frame for dumping the skip into pockets or cars; also the provision in the head-frame of shelter for the men who oversee the dumping and the separating of ore from rock as it is hoisted.

11. Illustrations of Two Wooden Head-Frames.—Fig. 3 illustrates a wooden head-frame for an inclined shaft and shows the ore-pocket for loading the ore into the cars during the summer; also the three elevated tramways or trestles leading to the high-grade stock-pile, the second-grade stock-pile, and the waste-rock dump. Fig. 4 illustrates a head-frame for an inclined shaft, in which the pocket occupies the entire lower portion of the structure. The

trestles for carrying the ore to the stock-piles or waste rock to the rock dump are on the farther side of the head-frame.

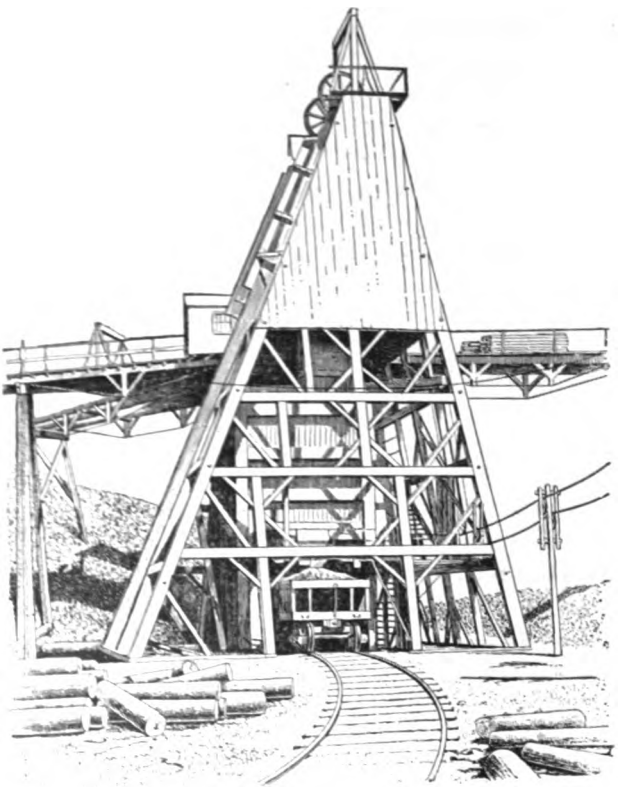

FIG. 3.

12. Steel Head-Frames.—Fig. 5 illustrates a steel head-frame as built for one of the large Western mines. The engines are placed in the engine-house to one side of the shaft, as shown, the hoisting being done by means of a flat wire rope and reels. The ore is hoisted in self-dumping skip-cages, or special skips, which assume the position shown by the dotted lines at *a* when dumping. The ore passes through a chute and into the pocket at *b*, and is controlled by means of a swinging chute *c*. In this plant the engine-house

is entirely separate from the head-frame, but the ore-pocket is built at one side of the head-frame and connected with

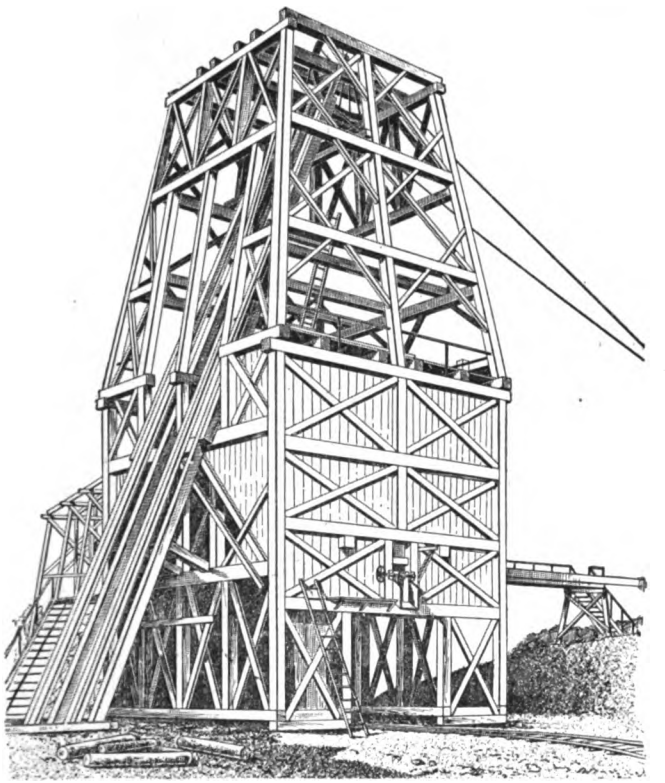

FIG. 4.

it. The advantage is that in case of fire in the shaft there is free access to the collar of the shaft for purposes of fighting fire, and also there is no danger of the hoisting machinery being destroyed, as would be the case were the entire hoisting works enclosed in one building, as shown in Fig. 1. This style of head-frame is coming into quite common use, especially in connection with large metal mines in which the output is expected to be very great and to continue for a number of years.

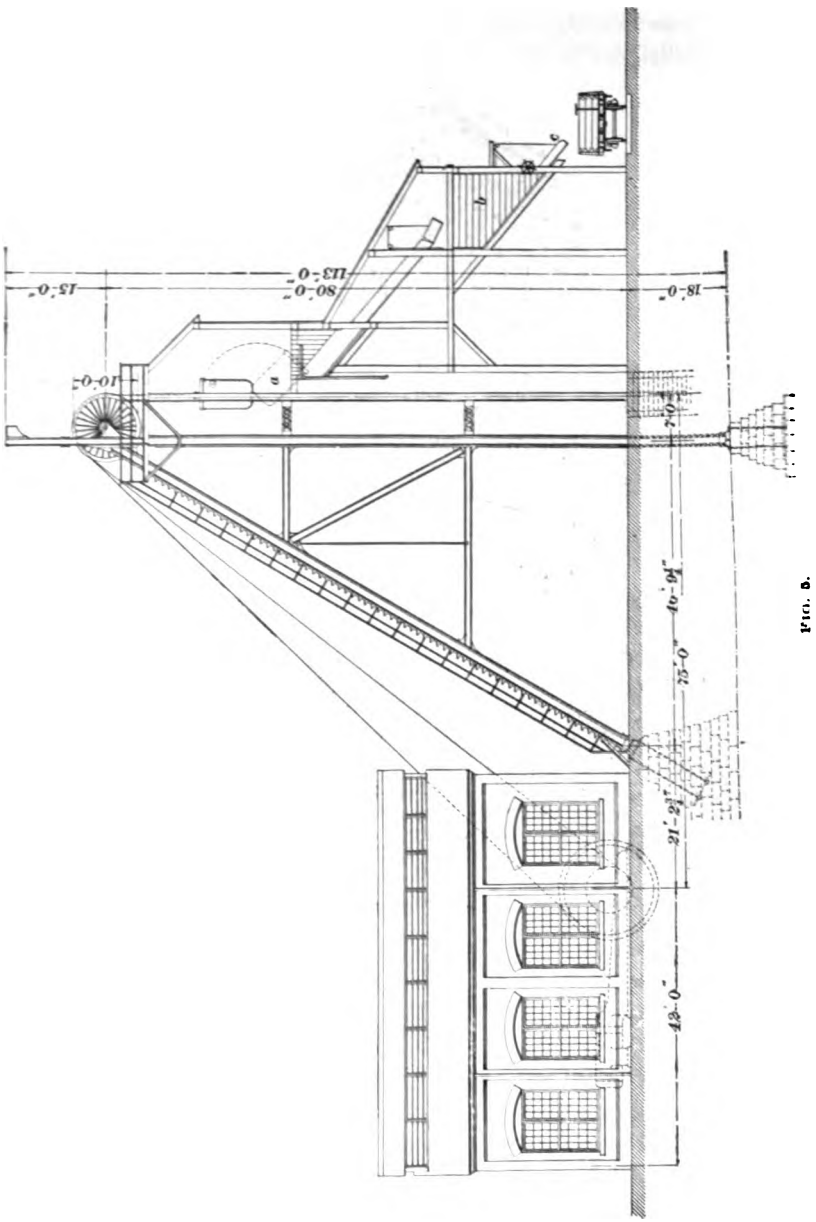

FIG. 5.

13. Gate as a Pocket Stop.—When cars are loaded for shipment, the ore is dumped into pockets at or near the shaft head and then loaded from these into the cars. This arrangement makes the hoisting to some extent independent of the transportation of the ore. Where pockets are employed, some style of gate must be used to control the flow of material from the pockets. Fig. 6 illustrates a plane gate operated by a rack and pinion, as shown in the illustration.

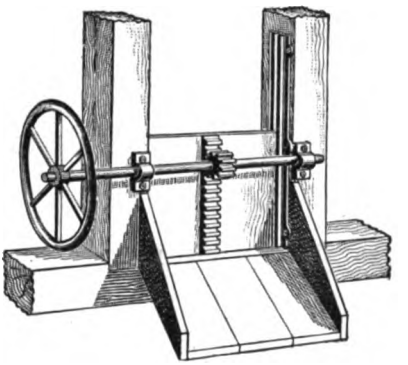

FIG. 6.

14. Swinging Chute as a Pocket Stop.—Fig. 7 illustrates a swinging chute, and when this is depended upon as a gate, the action consists simply in raising the chute to such an extent that the ore will not slide through it, but piles up, and thus blocks the opening in the front of the pocket. This style of chute is frequently employed in connection with other styles of gate, and is useful in cases where the gate sticks or jams and thus can not be closed.

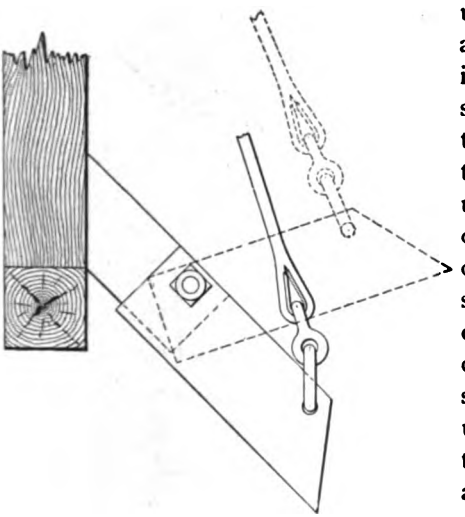

FIG. 7.

15. Pocket Stop for Coarse Ore.—Fig. 8 illustrates a very handy pocket stop for use with comparatively coarse

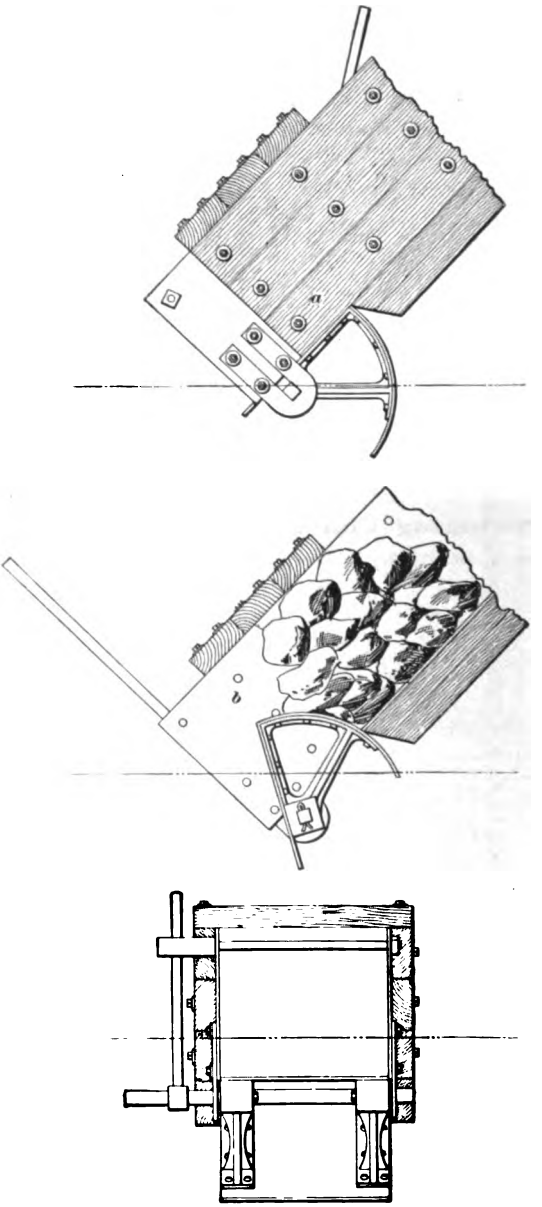

FIG. 8.

ores. As will be seen, when the gate is open the ore slides over one face of the stop, as shown at *a*, while when the gate is closed the ore simply jams between the curved face of the stop and the top of the chute, as shown at *b*. Owing to the curved form of this stop, it can not be jammed, as is the case in the form illustrated in Fig. 6.

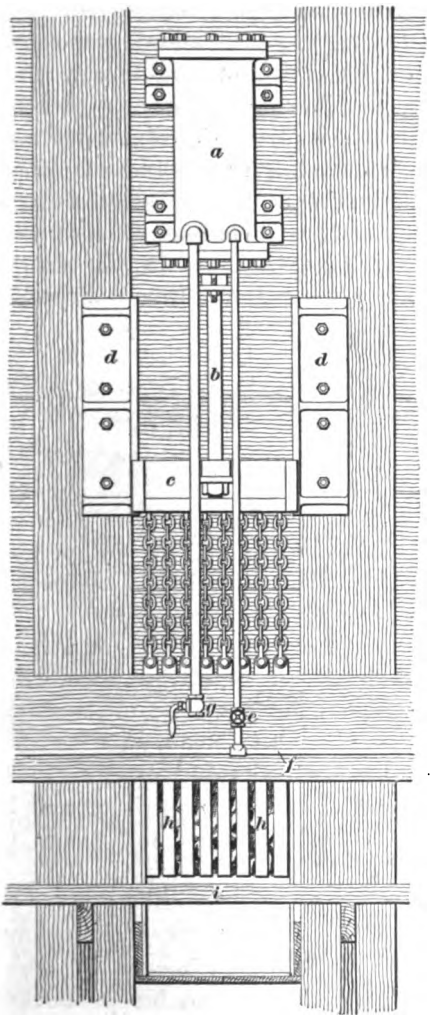

FIG. 9.

16. Special Sectional Pocket Stop for Coarse Ore.—Fig. 9 illustrates a pocket stop for use with coarse ore. In this case the stop is composed of iron bars *h*, *h*, which simply form a grating to hold the ore back. For opening the stop an air-cylinder *a* is provided. In this cylinder there is a piston connected with the piston-rod *b* and the cross-head *c*, which works between the guides *d*, *d* and is connected with the iron bars of the grating *h* by means of chains, as shown. The operator stands on the platform *i*, which is placed over and in front of the chute to the cars. When he wishes to raise the bars *h*, he opens the valve *e*, thus

introducing compressed air from the pipe *f* into the cylinder *a*. This air raises the piston, and thus the cross-head and grating bars. When he wishes to lower the bars again, he simply closes the valve *e* and allows the air to escape from under the piston by means of the valve *g*, when the cross-head and bars come down of their own weight. If any of the bars stick, the clevis at the top of the bar can be turned down and the bar driven with a hammer. This form of stop possesses considerable advantage when dealing with coarse ore, and the fact that it can be opened and closed so quickly, with the aid of compressed air, enables the loading of the cars to be accomplished in much less time than would otherwise be the case.

17. Arrangement of Bins, Pockets, or Stalls.—The arrangement of bins or pockets will be governed by the character of the ore, its subsequent treatment, and the regularity with which it is removed from the vicinity of the hoisting shaft. For example, the ore may require picking, cobbing, or crushing at the surface, in which case picking floors, belts, tables, or a crushing plant will be necessary.

18. The shipment of the ore may be in cars or wagons and its movement somewhat irregular, as, for instance, when the cars or wagons run only during the daytime and the hoisting continues night and day. In such a case as this, the pockets must have some considerable capacity. In other cases the ore may be taken to the tramway or mill by the mine-cars, which are hoisted on cages, and hence no bins or pockets are necessary.

19. When ore is hoisted in skips, there is sometimes provided a swinging spout or gate, by means of which the waste rock can be deflected into one bin or pocket, while the ore can be deflected into another.

20. Stalls.—For storing the ore, stalls or pockets may be employed. Stalls are simply provided with a floor and

sides, but have no front; the floor is flat and the ore has to be removed by shoveling.

21. Bins or Pockets.—Bins or pockets have four sides, as well as the floor, and the floor is usually constructed at such an angle that the ore will slide out through the chute by means of its own weight. Ore will slide on a flatter angle when the bins are lined with iron, and on this account the bottoms of the bins are usually so lined. In all cases bins should be provided with a double lining, and it is best to place tarred paper between the two linings to prevent the loss of fine material. Where the inner lining is

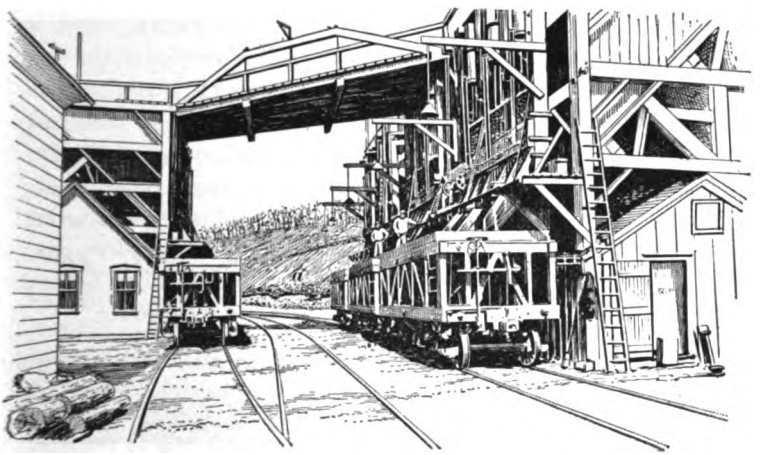

FIG. 10.

composed of boards, they should be placed in such a manner that the ore slides with the grain of the lumber and not across it, as this reduces the friction and increases the life of the lining. Fig. 10 illustrates a series of bins or pockets provided with pocket stops similar to those shown in Fig. 9. In addition to the grating pocket stops, the ore bins are provided with swinging spouts.

22. Picking of Ore.—Where it is desirable to pick over or sort the coarser ore, the product may be dumped from the mining cars over a grizzly and on to a picking floor,

as shown in Fig. 11. This picking floor may be on top of the bins and may cover all or only a portion of the top of the bins, the various grades of ore being shoveled or thrown

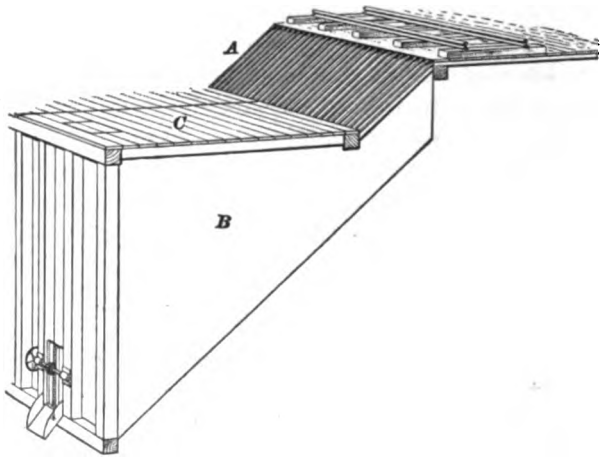

FIG. 11.

into different bins as they are sorted out. Provision may also be made by means of which the fine material falling through the grizzly passes into certain bins by itself.

23. The object of picking ore may be to separate two or more classes of mineral, so as to obtain better prices for some at the smelter, as, for instance, to separate the lead and zinc ores, or to produce ores carrying approximately a certain per cent. of the different constituents. The fine ore is rarely passed on to the picking table, though sometimes where a special picking table is employed, the entire product is passed over it. This is especially true when tables of the bumping pattern are employed, in which the ore is forced along by means of a bumping or jerking action of the table itself. In some cases the picking of the ore is accomplished while it is passing over the conveyer belts especially placed for this purpose.

24. The picking of ore is usually done by hand, though sometimes a fork is employed, by means of which large

masses of barren material or material which requires recrushing are simply thrown out from the regular run of the ore as it is being handled on the picking floors. In cases where the ore contains rich bunches of mineral, these are sometimes separated on the picking floor by cobbing with a small hammer so as to separate the rock from the ore. Where picking tables or belts are employed, the persons who do the picking stand at the sides of the table and pick off the different classes. It is best to pick off the smaller class, that is, if there is more ore than rock, to pick off the barren rock and allow the ore to pass on over the table. If the larger were picked off, it would entail a great amount of work. Where two or more minerals are being picked from the same belt or table, different persons pick for the different minerals, as in this way purer material can be obtained, for each person's eyes become accustomed to looking for a certain product, and they become more expert in handling one grade than they would if two or three grades were handled by each.

25. Case of Mill at Mine.—Occasionally the ore from the mine is delivered directly into the mill, and in such a case special pockets for loading cars, etc., are unnecessary. This is often the case at small mines.

26. Stock-Piles.—Where the ore is shipped during a portion of the year only (as, for instance, the Lake Superior Iron Mines, which ship by water during the summer months only), it becomes necessary to store the portion mined during the winter, and this has resulted in the practice of making stock-piles. A stock-pile is simply a large pile of ore ready for shipment, the value of which is known. In Fig. 10 a stock-pile *a* can be seen beyond the pockets, and Fig. 12 is a view taken from the opposite direction showing the pockets and the stock-piles on the sides of the track. Stock-piles usually have board floors, in order to keep the material from becoming mixed with the underlying earth or rock. Fig. 13 is a view of the stock-pile showing the board floor at the end of the pile.

27. Objection to Permanent Timber-Work in Stock-Piles.—As a rule, it is best not to allow any per-

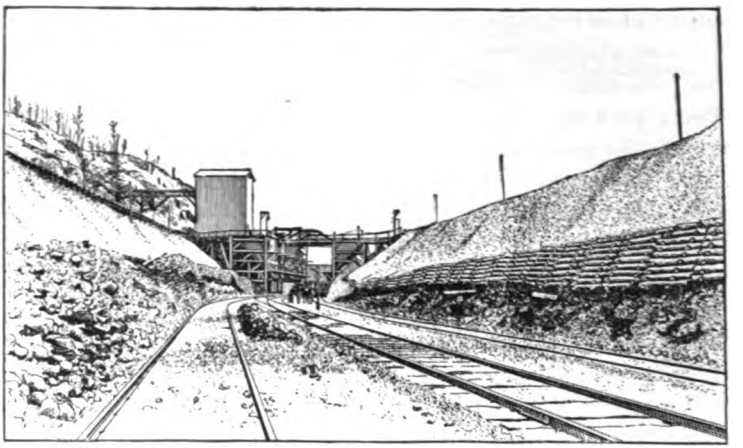

FIG. 12.

manent timber-work within the area of the stock-pile, as, for instance, a permanent trestle; for, during the subse-

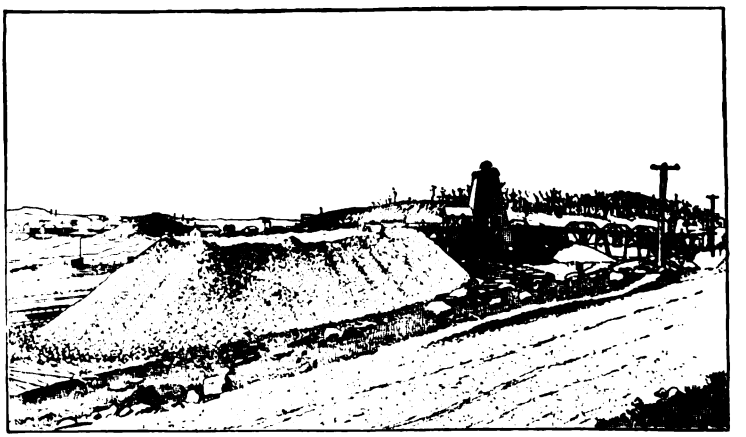

FIG. 13.

quent loading of the ore for shipment by means of the steam shovel, any timbers buried in the ore are decidedly

objectionable. On this account many of the stock-piles are built as shown in Fig. 13, by simply dumping the ore over the end of the trestle from the shaft-house and then advancing the pile by means of a track laid on top of it.

28. Special Trestle for Building a Stock-Pile.— In case the cars which dump the ore on to the stock-pile are trammed by power, it becomes necessary to provide some form of trestlework, and where this is done it is usually aimed to so design the bents of the trestle that the greater portion of the woodwork may be removed after the pile is completed, leaving little more than the legs remaining in the ore to be pulled out by the steam shovel. Fig. 14 illustrates one bent of the trestle as designed for stocking ore from special side-door cars. The bottoms of the cars are built like inverted V's, as shown, and the doors *a*, *a* are fastened down by latches, which can be released by pins or blocks placed at suitable points on the trestle. When the doors are released, they swing out into the position shown by the dotted lines, and the ore discharges automatically, after which the doors drop back and latch. The bents of the trestle are so designed that after the ore has filled in around the legs nearly to the brace *e*, the braces *c* and *d*, *d* may be removed and the ore depended upon for keeping the legs in place. After the stock-pile is completed, the stringers *b*, *b*, the track, and the caps *c* are removed. This leaves nothing but the legs of the trestle for the steam shovel to pull out, and hence is not

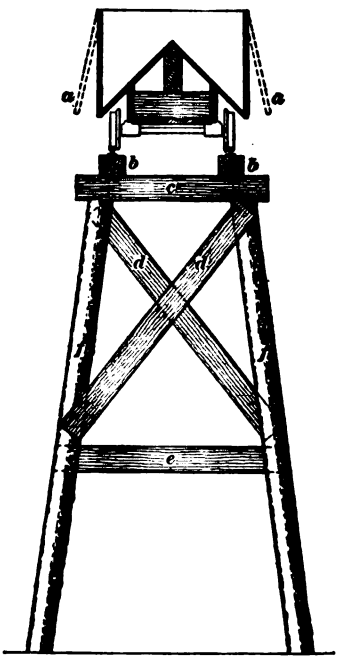

FIG. 14.

very objectionable. The fact that by this means the ore may be put into the stock-pile for a very much less cost per ton than where it is trammed by hand may more than counterbalance the additional trouble of pulling out the legs by means of the steam shovel.

29. Loading of Ore from Stock-Pile Into Cars.—The ore in the stock-piles is loaded into the regular railroad-cars during the summer by means of specially designed steam shovels. Owing to the fact that the ore, as hoisted from the mine, always contains more or less moisture, and that the winters in the Lake Superior region are very severe, it has been found that where a stock-pile has been built slowly (so that the layer of ore dumped over the face during any day amounts to a few inches only) the material freezes solid, and in that cold Northern climate this mass will not thaw out for a number of years. The result is that the shovel has to dig frozen ore during the summer months. On this account mines are now concentrating the work on their stock-pile to one place only, and by dumping several feet of ore during the day, they succeed in working so rapidly that the ore does not freeze solid, and hence is very much easier to excavate.

30. Where it is necessary to stock ore, provision must be made in laying out buildings and tracks on the surface, for the convenient handling of the ore, both on to and off from the stock-pile.

31. Requirements of Various Mines as to Storing Ore.—Extensive pockets, bins, or other provision for storing a supply of ore are, as a rule, not necessary at gold and silver mines having the mill for working the ore on the mining location, for in such cases the material is worked up as fast as it is mined ; while in the case of copper or iron ores, more extensive pockets or bins become necessary, and where the shipping season lasts only a portion of the year stock-piles are required.

32. Rock or Ore Dumps.—Rock piles or piles of ore are sometimes called dumps, as, for instance, miners may refer to the rock dump, second-grade dump, and the high-grade dump, and in this case the second-grade or high-grade dumps would be really stock-piles. The object in separating the ore on the dump into different grades is that at some future time means may be available for treating a different class of ore or a lower grade of ore than at the time the ore in question was mined. This is especially true in the case of mines which are shipping smelting ore and are saving any ore which may in the future be concentrated. Frequently the dumps (either of rock or ore) are in the way of projected railroads, and in such a case it will be necessary to excavate a tunnel through the dump, and to either timber the same or line it with metal or masonry, or to place the lining and build the dump over it. The metal linings are preferable on account of the fact that timber is liable to take fire and that the masonry is not as easily moved or changed in case the dump should ultimately be removed and the lining were wanted for another position.

33. Dumping Cradle.—At metal mines, when the ore is brought to the surface in the mine-cars, the cars are usually made self-dumping, and hence no special tipple for dumping or overturning the mine-cars is required. When the ore is hoisted in skips, it may be dumped into self-dumping cars, which place it in the pocket, or it may be dumped into special cars, which are dumped by means of a cradle. Figs. 15 and 16 illustrate one form of cradle and car sometimes employed at metal mines. In Fig. 15 the cradle is in the position in which it receives the car. The cars are filled with ore from the skips or pockets at the shaft and run into the cradles over the bins. After the car *a* is in the position shown in the illustration, the end lever *b* is thrown up in such a way as to drop the dogs *c*, which hold the wheels so that the car can not pass out of the cradle. The upper edges of the car are held in place by the angle-irons *d*, *d*. After the car is locked in position, the entire cradle is revolved

into the position shown in Fig. 16. In most cases the cradle makes a complete revolution, and when it returns to its upright position, a dog or latch (not shown in the figure)

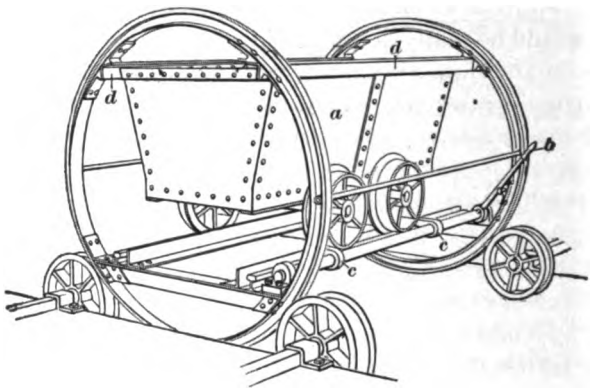

FIG. 15.

catches the rails and holds the cradle in such a position that the portion of the track on which the car rests is continuous with the regular railroad track. After this the lever *b* is thrown down and the car run out on to the track. When

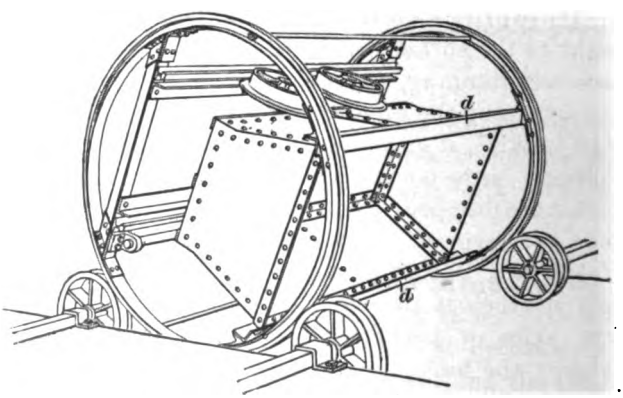

FIG. 16.

the car is loaded, the greater part of the weight is above the center of gravity of the cradle, and hence it turns very easily, while after the ore is out, the heavy car-wheels and

track enable the operator to bring it back into its upright position with very little work.

34. Self-Dumping Mine-Cars.—Usually the ore is dumped into bins or on to the stock-pile from end or side dumping cars. Figs. 17 and 18 illustrate a common form of mine-car as employed in metal mines. This car is so constructed that it can be dumped either to the right or left, the body being fastened on to the trucks by means of a pivot at *e*, Fig. 18. When it is desired to dump the car, the operator takes hold of the handle *c*,

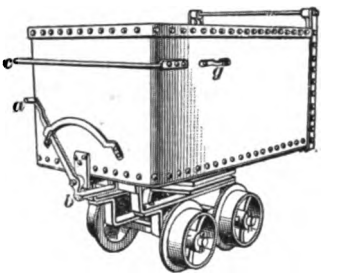

FIG. 17.

and then throws the handle *a* far enough to release the latch *b*, but this does not rotate the shaft *d* far enough to release the latch which holds the front end of the car *f* from swinging open. After this he lifts the handle *c* and swings the car to the right or left, as may be desired; then, by throwing the handle *a* clear over, as shown in Fig. 18, the front end of the car will swing out and discharge the contents. After this the car can be swung around and dropped into place. The front end *f* closes of itself and is secured by returning the lever *a* to the position shown in Fig. 17.

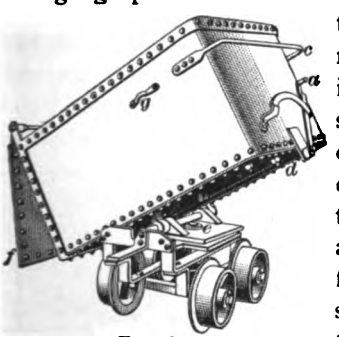

FIG. 18.

The same style of truck is sometimes employed with wooden cars, but, as a rule, steel is the best material from which to manufacture mine-cars for use at metal mines. A little loop riveted on the side of the car at *g* is for inserting the latch which holds the car in place while it is being hoisted on the cage. When ore is brought to the surface in skips, it is frequently dumped into cars of this pattern before it is [illegible] out to the pocket or stock-pile.

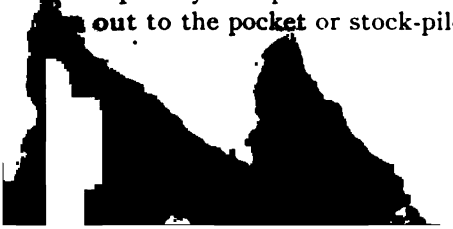

35. Scoop Cars.—Fig. 19 illustrates a car having the same character of truck as that shown in Figs. 17 and 18, but being provided with a scoop body or box. This style of car can be dumped without having to unfasten the front, as was the case with the one previously illustrated.

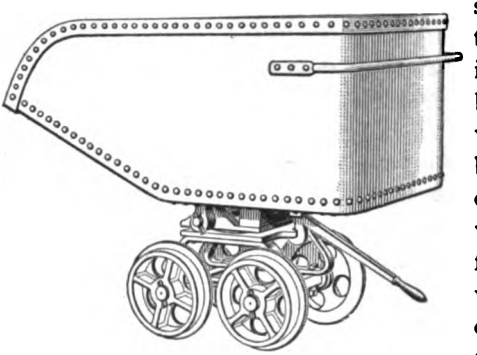

FIG. 19.

TRANSPORTATION OF ORE AND SUPPLIES.

36. General Consideration.—In the smaller precious-metal mines, the transportation of ore and supplies is usually accomplished either with wagons or with pack animals. In the case of gold and silver mines having their own mill, a car-track may be used between the mine and the mill, but all the other supplies may be transported by means of wagons. This is especially true in the case of mountainous countries, for a gold or silver mill may have a large output without having to transport much weight for long distances, the contents of the ore being reduced into a small weight of valuable metal. If the transportation by means of wagons proves too expensive, and owing to the character of the country a railroad is out of the question, either an inclined plane or an aerial or wire-rope tramway may be employed. In the case of most large metal mines, connection is made with the regular railroad tracks, and the supplies are brought to the mine on cars and the ore taken away in the same manner.

37. Gauge of Tracks.—Where the mine has tracks of its own on the surface, it is well to adopt a uniform

gauge. This is especially true in case the mine-cars are brought to the surface by means of a cage or the mine is operated through a tunnel. For small railroads, the gauge of the track is sometimes measured as shown in Fig. 20,

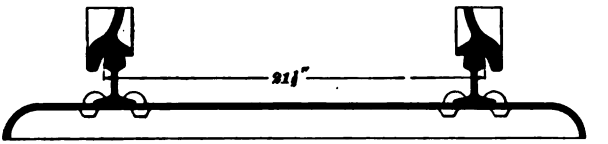

FIG. 20.

which illustrates the standard gauge for Hunt's Industrial Railways, and, as will be seen, the flanges of the wheels turn out, the rails being between the flanges. In the case of the standard railroads and most mining railroads, the gauge is measured as shown in Fig. 21, the standard gauge for

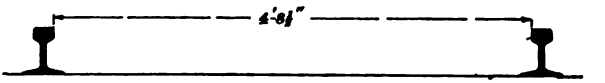

FIG. 21.

the United States being 4 feet 8½ inches. In some mines this same gauge is employed for the skip-road and for all the surface roads, the tracks in the underground drifts being laid with a somewhat narrower gauge.

38. Advantage of Having But One Kind of Track.—If cars are employed having the flanges on the inside of the rails, it is well to keep all the cars and tracks of this pattern, on account of the fact that switches designed for cars having one style of wheels are not suitable for those having the other style, and if all the cars had their flanges the same, the small or narrow gauge cars may be run over the same line as the wide gauge by simply laying a third rail in such a manner that the narrow-gauge cars follow one of the ordinary rails and their special or extra rail laid between the others.

39. Inclined Planes.—Where the mine is situated on a hill and the ore is to be transported down to a mill or other works, an inclined plane may be employed in which

the descending loaded cars draw up the empty cars. The rope which connects the loaded and empty cars passes around sheaves at the top, which are provided with brakes in such a manner that their speed can be governed.

40. Flumes and Chutes.—Where water is available, the ore from a mine is sometimes flumed down the hill by means of a current of water. At other times, chutes are used and the ore allowed to slide through them.

41. Grade of Tracks.—Where railroad tracks are used at mines, an attempt should be made to have all the grades favor the loaded cars. Where it is intended that cars shall run by gravity, as, for instance, away from the loading chute, the necessary grade will depend somewhat on the construction of the cars, for some mine-cars run much harder than others. For loaded cars, a grade of from .75 foot to 1.25 feet in 100 feet will usually be sufficient, while for empty cars it may require a grade of from between 1 foot in 100 to 2.25 feet in 100 to make the car start and run by gravity.

42. Roadbed.—Where a steam, electric, or compressed-air locomotive is to be used, the track should be laid with good ties, but the embankments and ballasting do not require the care which is usually bestowed upon large commercial railroad lines, where the speeds are very much greater.

43. Relation Between Character of Ore Mined and the Means of Transportation.—The general arrangement of the surface plant at any mine and the adoption of the kind of transportation plant to be used always depend, to a large extent, upon the nature of the ore-bodies being worked. In the case of large iron, copper, gold, or silver mines, it will be necessary to lay down quite an extensive plant and make preparations for handling very large tonnages, while with such irregular deposits as some of the zinc and lead mines, which occur as irregular and pockety deposits either in or on top of limestone and which

are worked from comparatively small shafts with light hoisting appliances, such extensive surface arrangements are out of place, and everything about the location must be of a more or less portable nature. The location of all buildings about a mine is governed by their accessibility for the purpose for which they are intended and by the liability of their being damaged or destroyed on account of the caving of the surface due to the mining operations, or by slides of snow or rock from overhanging hills or dumps. In the case of some mines, very little more than the material which the men eat and wear has to be transported to the location, the timber necessary in the mining operations being obtained from the adjoining country, and the product from the mine being reduced to a very small bulk by means of a gold or silver mill on the property. After the mill has once been erected and gotten into running order, such a location as this is to a large extent independent of outside communication, there being little demand for the transportation of supplies to or from the outside country. Such locations as this can get along very well with only wagon or pack-train connection with the outside world, but where large amounts of concentrates or heavy ore have to be transported, either a railroad, inclined plane, or aerial tramway is necessary.

44. Aerial Tramway.—The wire-rope or aerial tramway has the advantage that it is independent of differences in elevation and can pass over a country having a very rough profile, as shown in Fig. 22, which illustrates one of these tramways as used for transporting ore from a mine to the mill.

45. Wagon-Trains.—Where wagons are used for transporting ore, supplies, or materials, it is very common practice to use one lead wagon and to hitch two or three trail wagons behind it, and then draw the entire load by means of a team of from twelve to sixteen horses or mules. The advantage of this method is that one driver can handle a very much greater weight of freight than would be possible if the teams were divided up among the wagons and a

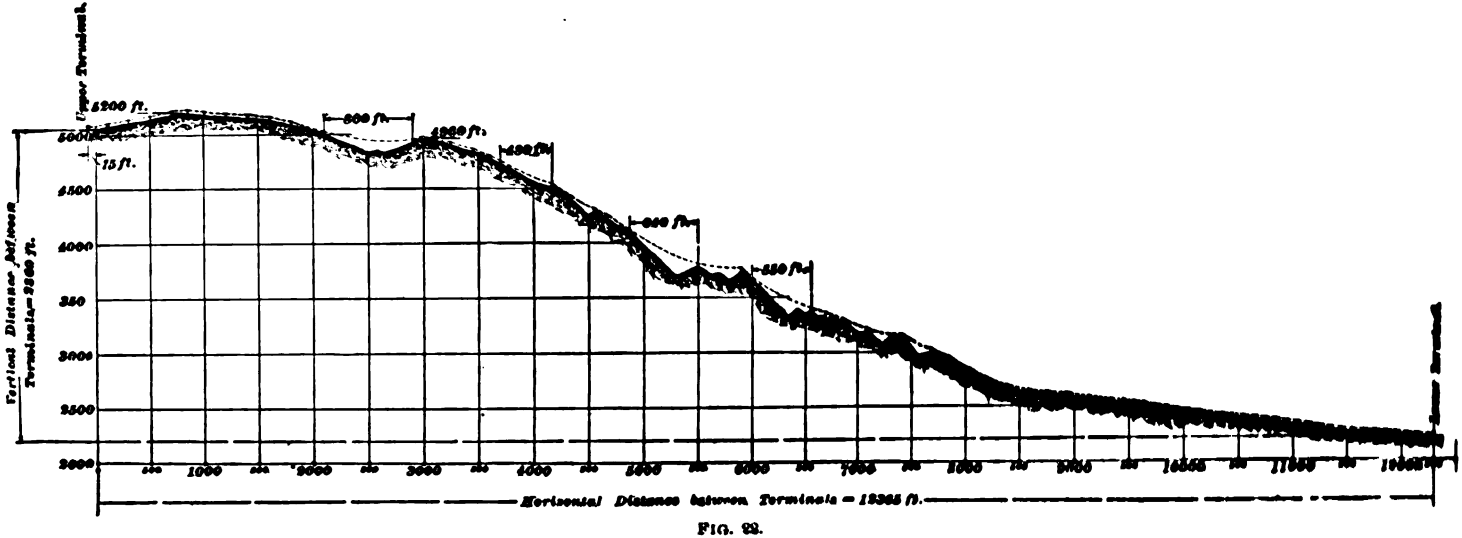
Upper Terminal.
5200 ft.
15 ft.
800 ft.
4500
4000
350
3000
2500
2000
1000
2000
3000
4000
5000
6000
7000
8000
9000
10000
11000
Vertical Distance between Terminals = 2500 ft.
Horizontal Distance between Terminals = 12365 ft.

FIG. 22.

driver provided for each. Another advantage is that when a bad hill is encountered, the wagons can be separated and all the teams employed for taking the individual wagons up the hill.

46. Traction-Engines.—In some localities traction-engines are employed for drawing freight wagons, the freight wagons or trucks being drawn in trains of from two to twelve. This method of transportation has found an especial field in the borax industry on the deserts of the West.

TIMBER-YARD AND MEANS FOR PREPARING AND HANDLING TIMBER.

47. Keeping Timber in Water.—At some mines the stock of timber intended for use underground is kept in an adjoining lake or river until it is wanted at the mill or place where the timber is prepared. While this method does not allow the seasoning of the timber previous to use, it has the advantage that there is no danger of the stock of timber being burned, and at many mines it would be an extremely difficult task to fight fire in the timber-yard if there were much of a stock on hand.

48. Seasoning and Removing of Bark.—In the United States very little timbering intended for use underground is specially seasoned before it is placed in the mine, and round timber rarely has the bark removed. This is especially true where the soft woods are used. If the timber is used underground soon after it is cut and is placed where the air is not bad, it is probable that leaving the bark on makes but little difference, but if timber is piled up on skids and left for some time with the bark on, the worms are liable to attack the wood, and at times will eat clear through a large log, and so thoroughly honeycomb it that it would be worthless for mine timbering.

49. Manner in Which Timber is Brought to the Mine.—In some locations a supply of timber is brought to

the mine during the winter, when it can be handled on sleds over the snow. In other cases it is run down some adjoining river, and hence the year's supply arrives during the spring log drive. In either of these cases, provision must be made at the mine for storing a year's supply of timber. Where the mine is located in a mountainous region and surrounded by timber, the supply is sometimes cut as required, regardless of the season.

50. Keeping of Sawed Timber.—Where sawed timber is employed, it should be carefully piled and protected

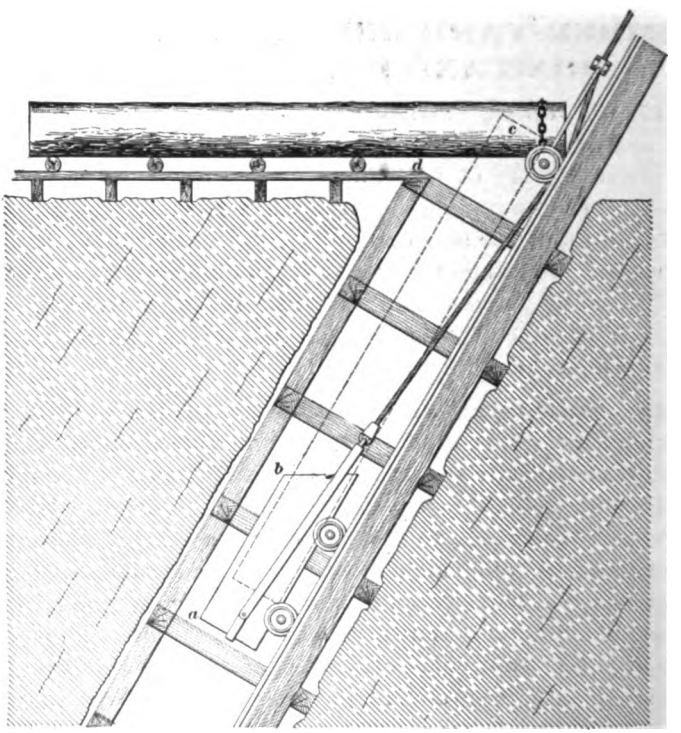

FIG. 23.

from the weather as much as possible, so that it may be seasoned while it is stored in the timber-yard.

51. Place for Framing Timber.—If the timbering is framed by hand, a special place should be provided, with a floor and a shelter for the men who do the framing. The floor enables the men to clean up chips, small blocks of wood, etc., and so keep the place in much neater condition, thus reducing the danger from fire.

52. Lagging.—Split lagging is much better than sawed lagging, and on this account cedar, which splits easily, is a favorite material for lagging.

53. Machine Framing.—Machine-framed timber is better than hand-framed timber, as has been stated under the head of "Mine Timbering" in the Paper on *Metal Mining*. Where machine-framed timber is employed, the framing plant should contain saws for cutting off lagging or the logs to be framed, and a special framing machine for cutting the joints of the mine timbering; also chain conveyers to move the logs from the timber-yard to the framing plant, and conveyers or chutes for handling the finished material to the place where it is stored previous to being sent underground. The joints used in mine timbering and the machines for framing them have been illustrated in the Paper on *Metal Mining*. Timber intended for use underground can be transported from the storage yard to the shaft on light trucks running on a railroad.

54. Transporting Long Timbers Down an Inclined Shaft.—One arrangement for the transportation or handling of long timbers down an inclined shaft is illustrated in Figs. 23 and 24. The back of the skip *a b* is removed

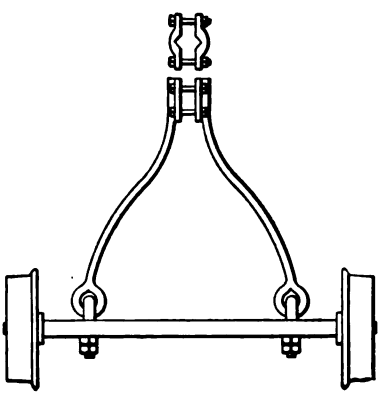

FIG. 24.

and a special trolley *c* connected to the rope above the skip. Another view of the trolley is shown in Fig. 24, from which it can be seen that the trolley is simply a heavy axle provided with a pair of wheels, to which a yoke and clamp are attached, so that it can be placed on the rope at any point above the skip. The timber is rolled across the shaft on rollers, as shown in Fig. 23, and its end chained to the trolley, as shown at *c*. After this, the skip is hoisted and the trolley drags the log up the incline until the back end of the timber drops over the collar of the shaft *d* and into the skip, as shown by the dotted lines. In this way very large and heavy logs for use in timbering stations or pump-rooms can be transported through the shaft.

55. Transporting Timbers Down a Vertical Shaft.—Where it is necessary to take ordinary timbering down a vertical shaft, it is sometimes accomplished by hanging logs under the skip or cage. Fig. 25 illustrates a clevis arranged for this purpose. A hole is bored through the timber a little over 1 foot from the end and a bolt inserted, by means of which, and the clevis or tongs, the timber is suspended beneath the cage or skip and lowered into position. A spike or dog is driven into the lower end of the timber and a short piece of rope attached to it, which can be used in steadying the piece before it is lowered and in drawing it to one side while landing it at the bottom of the shaft. Sometimes, in place of a clevis and bolt, a pair of tongs, with the points shaped like the point of a cant-hook, are employed. Fig. 26 shows one point of such a pair of tongs. When these tongs are employed, the points are simply driven into the log. At other times, dogs

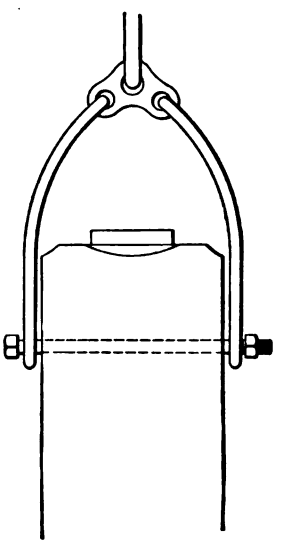

FIG. 25.

or spikes, having chains attached to them, are driven into the log and it is lowered by means of the chains. Both of the methods in which the bolt is not used are somewhat dangerous, as, if the log were to strike on the side of the shaft, it would probably become disengaged and fall free of the cage or skip, thus doing great damage. Where a cage is used for lowering timbering, one or both sides of the cage hood may be so constructed that it can be swung back and lashed to the rope, after which long timbers can be set up on end, their upper ends being also lashed to the rope while they are being lowered.

FIG. 26.

56. Balanced Timber Skip.—In some mines a special timber skip provided with a balance weight which always brings the empty skip to the top is employed. When the skip is filled with timber, it overbalances the weight and descends of itself, the speed being controlled by means of a brake attached to the wheel over which the rope passes on its way from the skip to the weight. This device does away with the use of an extra hoisting-engine for handling the mine timber.

57. Scraps and Blocks.—All scraps or blocks of timber cut from the ends of the logs or lagging in the framing yard or mill should be saved for use as blocking underground.

58. General Arrangement for Handling Timber.—Small trucks may be used for bringing the timber to the top of the shaft and cant-hooks or pevys (a pevy is a cant-hook with a spike in the end of the handle) for loading it on to the cage or skip. Where the timbers are especially heavy, it is well to have a supply of rollers at the top of the shaft to assist in handling heavy pieces. In some mines timbering is carried underground through a chute, without the use of any cage or skip, and in this case the men have simply to roll the pieces into the top of the chute. Square timber is generally harder to handle than round timber, on

account of the fact that it can not be rolled so easily. Many mines make provision at the surface for handling timber on a slightly different level from that on which the skips are dumped or the cages deliver the cars. By this means the men handling the timber are never in the way of the ore-cars.

POWER AND LIGHT PLANT AND TRANSMISSION OF POWER.

59. Power Required.—Under this head may be considered the power required both for pumping the water from the mine and for supplying water for any purposes for which it is needed about the location; power for running the plant for preparing the timber; for operating cable, chain, or electric haulage plants, either on the surface or underground; for furnishing electric lights both above and below the ground; for furnishing compressed air for operating the underground machinery (either drills or motors); for operating any machinery used for ventilating the mine; for running the machine-shop; and for running the plants for preparing and treating the ore.

60. Water-Power. — Some mines are fortunate in being so located that they can obtain water-power for all or most of these purposes, and in this case the question arises, How shall power be transmitted to the mining location ?

61. Power Transmission.—If the distance is considerable, this can be accomplished by either of two methods: by means of compressed air or by means of electricity.

62. General Comparison of Electric and Compressed-Air Power Transmission.—The compressed-air transmission plant has the following advantages: If it is desired to guard against a breakdown in the water-power plant, or if there is danger of the water-power not being sufficient for the entire year, this may be guarded against by simply installing a boiler plant at the location; for all the compressed-air motors can be driven by steam, and when

the boiler plant is not in use, it can be used as a reservoir in which to store the compressed air, thus equalizing the work upon the compressor plant. The compressed air will do all the work which can be done by electricity, except that of furnishing light, and, as has been stated above, for guarding against a breakdown, only a boiler plant need be installed. If electricity is used for transmitting power, it may be necessary to install air-compressors at the mine and to drive them by electric motors; in order to furnish compressed air for the drills underground and to guard against any possible breakdown, it will be necessary to install either a boiler and engine plant at the water-power station or a boiler, engine, and generator plant at the mining location, either of which plans requires a very much greater outlay of capital than the boiler plant, by means of which the same end was gained when the power was transmitted by compressed air. If reheaters are used in connection with compressed-air motors, the total efficiency of the compressed-air transmission plant may be made almost as high as that of the electric transmission plant. Compressed-air transmission plants are now in use at a number of mines, such as those located at Grass Valley, California, and a number of the Michigan mines. Where a compressed-air transmission plant is employed, if electric lights are desired, it will be necessary to drive a dynamo by means of an engine driven by compressed air, or to install a small electric-light plant operated by steam. On account of the fact that the electric plant furnishes both power and light, and that compressed air is not generally required in mills or factories, electric-power transmission plants are very much more common than compressed-air transmission plants; but where the plant is installed for mining purposes only, the engineer will do well to figure the advantages of each method before deciding as to the requirements of any particular case.

63. Rope Transmission.—Sometimes power is transmitted by means of a rope drive, but this method is not often employed at a mine.

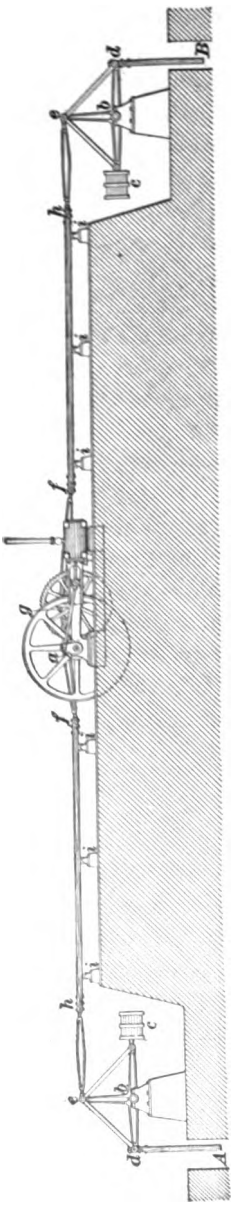

FIG. 27.

64. Central Power Plant.—In case the mine is so located that it does not have access to water-power, then steam can be used for generating power, and at most large mining locations it is found best to use a central power plant driven by steam-engines, from which both electricity and compressed air are distributed as required about the location. The advantages of concentrating the general power plant are that the fuel and water-supply may be more economically handled, and a smaller number of attendants are required than is the case if separate plants are installed wherever power is required.

65. Individual Hoisting Plants.—Usually individual plants installed to operate large shafts are provided with their own power plants, consisting of a hoisting-engine and the necessary boilers for operating it, but in some cases the engines are driven by compressed air or are replaced by electric motors.

66. Cornish Pumping Plant.—When pumping is done through two or more shafts, the pumps are sometimes operated by means of rods, as in the Cornish system of pumping. Fig. 27 illustrates an arrangement of plant in which an engine is located between two shafts *A* and *B*. The pumps in both shafts are operated by rods which are connected to the ends of the bobs at *b*; the engine drives a

large crank at *g*, and the rods operating both pumps are connected to this crank. The first rods *f g* are pivoted at *f* and at *g*; the connecting-rods which run to the shafts slide backwards and forwards over the rollers, as shown at *i*, *i*. At the other ends of the horizontal rods there are pivoted rods *e h* which operate the bobs *c d e*. These bobs are pivoted on piers at *b* and are provided with counterweights at *c*, which balance the rods hanging from the ends *d*. The result is that the engine is lifting one set of rods while the other is descending, and as the rods are balanced, and the two plants are balanced against each other, the engine has only to lift the water and overcome the friction of the rods. Sometimes the weights *c* are done away with, and the rods connecting the points *e* and *g* are replaced by wire ropes. In this case the rods in the shaft descend by their own weight and are drawn up by the engine which has to lift both the rods and the weight of the water. But where two plants can be balanced against each other, this may be an economical arrangement. In many cases the Cornish pumping plant operates the pumps in a single shaft, as in Fig. 1.

67. Steam, Compressed-Air, or Electric Pumping Plants.—Sometimes electricity, steam, or compressed air is transmitted down the shaft to underground pumps. One advantage of this method is that there are no pump-rods constantly moving up and down in the shaft. If either steam or electric pumps are employed and the mine should become flooded with water, there is danger of not being able to start the pumps and so unwater the mine, while if the Cornish pumps are properly greased and oiled before the mine is flooded, they can be started at any time; and to a certain extent this is also true of pumps operated by compressed air, especially when the exhaust of the latter is piped to the surface. The mining company may also require a pumping plant to furnish water for general use at the boilers, at wash-houses, and for fire protection. Special pumping plants may also be required to furnish large

volumes of water for the plant used in washing or concentrating the ore.

68. Machine-Shop. — The machine-shop is usually placed near the central power station and receives power from it.

69. The general machine or repair shop at any large mining location consists of a carpenter shop, with sufficient machinery to enable the operators to repair cars, trucks, etc.; a machine-shop containing sufficient tools, benches, and machines for repairing pumps, air-drills, cars, small motors, or hoists, etc.; a blacksmith shop fitted for heavy work, such as the forgings required for repairing machinery, building cars, etc. The blacksmith shop is sometimes provided with a steam hammer. If a number of mines are operated from the same location, small blacksmith shops are placed at each mine for sharpening picks, drills, etc. In case the shaft heads are adjacent to the central machine-shop, the sharpening of drills, picks, etc., for the entire mine may be done at the central blacksmith shop. The entire shop plant is usually referred to as the machine-shop, any other small blacksmith shops being simply called "blacksmith shops."

70. Power for Ore-Dressing Plant. — The plant for preparing or treating the ore may have a separate power plant, or may derive its power from the central plant. The latter is usually the case when the power is furnished by water-power and transmitted by electricity or compressed air, and is also frequently the case when there is a large central power plant.

PLANT FOR PREPARING OR TREATING THE ORE.

71. General Consideration.—The plant for preparing the ore may be simply a crushing plant, which crushes the material after it is hoisted and before it passes to the storage bins or stock-piles, from which it is to be loaded for shipment; the ore may be both crushed and washed to free

it from clay, or the plant may include sorting tables, belts, or floors, either associated with the crushing and washing plant or separate from them. Some mines have a plant for treating the ore and recovering the metals located at the mine. This may be a complete concentration mill, a plant for the recovery of gold and silver, or a smelter. When possible, these works for treating the ore are usually located near the hoisting works or headgear, but sometimes the works for reducing the ore are placed at some distance from the mine, where a better supply of water and fuel is available, or where there is a suitable dump for tailings or slag. Where the ore is to be simply crushed, the rock house may be a portion of the hoisting works; the skips are dumped over grizzlies, the fines passing into the pocket at once and the coarse material passing to the hopper of a crusher, which reduces the larger pieces to a suitable size, the product of the crusher falling into the same pocket that the fines passed into. If more extensive treatment is required and an extensive plant becomes necessary, the general design of the works will depend upon the character of the ore. These subjects come under the head of metallurgy, and so would not be treated under the head of mining, though the mining engineer may have to make allowance and plans for the arrangement of buildings to contain the metallurgical plant. A good deal of the machinery for the concentration of ores has been treated in *Ore Dressing and Milling*.

GENERAL ARRANGEMENT OF BUILDINGS NECESSARY FOR THE PROSECUTION OF THE WORK.

72. Railroad Connection.—In laying out the arrangement of buildings at any mining location, care must be taken to see that advantage is taken of gravity in handling all material where this can be accomplished, and in case the mine is connected with a railroad, as much of the plant as possible should be connected with the railroad, so that

by this means material can be taken away or supplies delivered to any place in which they may be required.

73. Plant Should Be Compact.—The plant should be as compact as possible without unduly increasing the fire risk by having the buildings too near together. One advantage of compact arrangement is that the haulage of the ore and supplies is reduced to the shortest possible distance, and the superintendent, foreman, or watchman can pass over the ground with greater ease. The company's offices, repair-shops, etc., should be as centrally located as possible, and if the mine owns the houses in which the men live and maintains a company store, the latter should be located centrally, and the houses should be arranged so as to have good drainage, light, and ventilation. If possible, all buildings should be so located that they can be protected from fire by the company's water plant.

74. Powder House and the Handling of Powder.—The powder house at any mining location should be situated where it will not be affected by blasts in the mine or by the jar of the machinery of the stamp-mill; also, the location should be such that in case it should explode, the explosion will do the least damage to the surrounding property. It is well to have the magazine fairly close to the railroad, so that the day's supply of powder can be brought from the magazine to the mining location on a small hand-car or truck. It is best to bring a supply of powder in the daytime, when the men can see what they are doing and signals for keeping other trains and cars out of the way are more liable to be noticed. Powder should be handled at a time when there are no men traveling through the shaft or at the stations, except those actually engaged in the work of handling the powder. If the thawing is done underground, the powder can be taken to the underground magazine at once. Caps and fuse should never be kept in the same magazine with the powder, but a special place on the location should be provided for them. Where large quantities of powder are used, thawing rooms should be provided on the

mine location and one day's supply of powder kept in them. Where this is the case, the men bring the supply to be thawed each day, and remove that which is ready for work to the place where it is to be used. A powder house itself, if intended for the storage of high explosives, should be substantially built, having a firm foundation, either brick or stone walls, and a corrugated iron roof. The powder house should be provided with a double door and an air-space in the walls. Care should be taken that no iron nails or other ironwork project into the interior of the house, and it is best to have the doors secured by means of brass locks and brass fastenings. Certain men should be detailed to handle the powder and should be made responsible for the magazine and its contents.

FRAMING OF TIMBER STRUCTURES.

75. Trestles.—As most mines require railroad tracks, and as it is frequently necessary to construct trestles, either leading to bins or dumps or during the regular construction of any mine railroad, some illustrations will be given as to the framing of some simple forms of trestles. Fig. 28 illustrates the various parts of a trestle and Fig. 29 two forms of bents and a side elevation of a portion of a pile bent trestle. The various parts are numbered, and the following table gives the names of the different pieces:

Bent, Framed, 1.
Bent, Pile, 2.
Cap, 3.
Cross-tie, 4.
Dapping, 5.
Gaining, see Dapping, 5.
Guard-rail, 6.
Jack-stringer, 7.
Longitudinal Brace, 8.
Mortise, 9.
Mudsill, 10.
Notching, Gaining, Dapping, 5.
Packing-block, 11.
Packing-bolts, 12.
Piles, Batter, Inclined, Brace, 13.
Vertical, Plumb, Upright, 14.
Posts, Vertical, Plumb, Upright, 15.
Batter, Inclined, 16.
Sill, 17.
Stringer, 18.
Sway-brace, 19.
Tenon, 20.
Waling-strip, see Longitudinal Brace, 8.

The portion of the illustration at (*a*), Fig. 28, shows the arrangement of a pile bent trestle, while that at (*b*) shows the arrangement of a framing bent trestle. In case the trestle

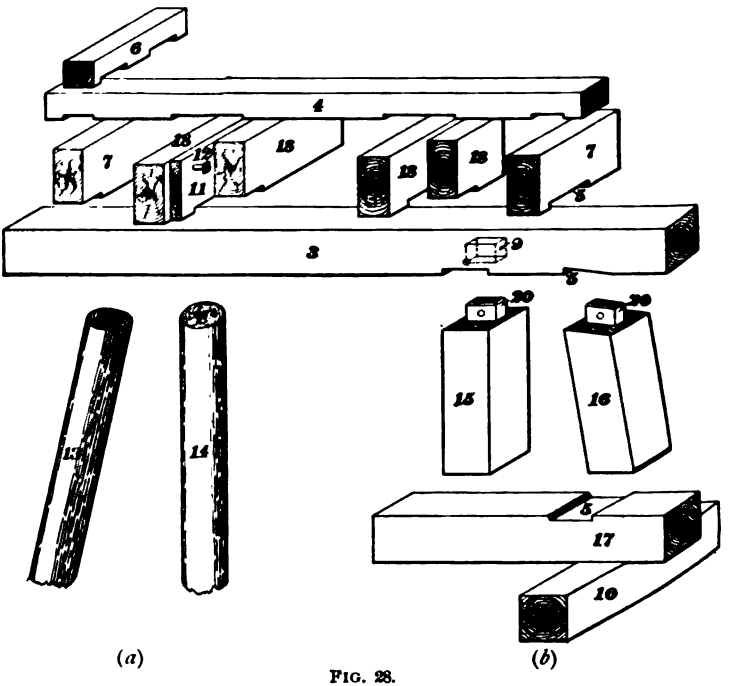

FIG. 28.

is not very high and piles are employed, they may be driven vertically, but it is always best to have the outer piles driven at an angle so as to form batter braces. Fig. 30

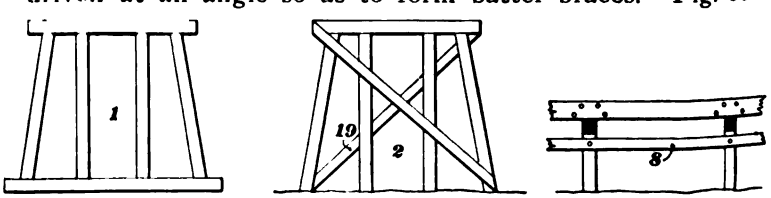

FIG. 29.

illustrates a pile having a tenon formed on the upper end to receive the cap. When this method of securing the caps is employed, a hole is drilled through the cheeks of the mortise

in the cap and through the tenon. It is well to have the hole in the cheeks of the mortise so placed that when the pin is driven through two holes it will tend to draw the cap down on to the top of the pile. The pin used for this pur-

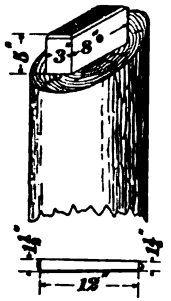

FIG. 30.

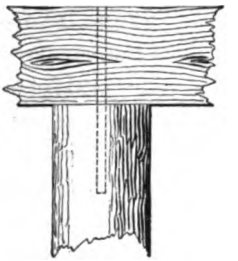

FIG. 31.

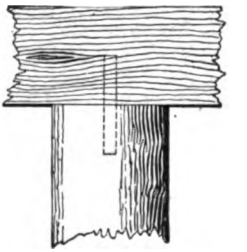

FIG. 32.

pose is commonly called a treenail, and should be made of hard wood and slightly tapered, as shown in the lower part of the illustration, Fig. 30. Sometimes the caps are not mortised and tenoned on to the piles, but may be secured by means of drift-bolts, as shown in Fig. 31, or by means of dowels, as shown in Fig. 32.

76. Split Caps.—Another arrangement is shown in Fig. 33. This is called the "split" cap, and in place of using one 10″ × 10″ timber, two 5″ × 10″ timbers are employed, and the top of the pile is cut as shown in the illustration. The timbers can be seen at *a* and *b*, while *c* is a tenon the full width of the pile which is allowed to project up between the timbers. No notches are cut in the timbers where they rest on top of the piles, but they are secured in place by means of a bolt *d*, which passes through both timbers and the tenon.

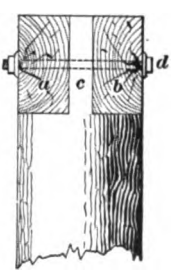

FIG. 33.

Some of the advantages of this method of framing the caps are as follows:

1. On account of the smaller size, it is possible to obtain better pieces of timber.

2. Repairs can be made with greater ease than where the caps are mortised and tenoned or fastened with drift-bolts to the top of the piles, for either portion of the cap can be removed and replaced without interfering with traffic or without cutting any portion of the timber-work.

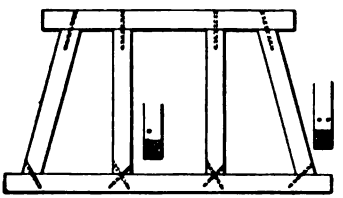

FIG. 34.

77. Framed Bents.—Where it is not possible to drive piles and form pile bents, framed bents are employed. Fig. 34 illustrates a framed bent in which all the timbers are simply secured by means of drift-bolts.

78. Foundations for Sills.—The sill of the bent should always be placed upon some form of foundation. This may be composed of timber mudsills, as shown at number 10, Fig. 28, but it is a better practice to construct stone or masonry walls under the sills and to see that the latter are well bedded. When masonry is used as a foundation for sills, care must be taken to see that the stones are well laid, and it is never good practice to construct these foundations of round stones laid up like rubblework, for the constant passage of trains over the trestle is liable to break up such a foundation.

79. Placing of Timbers.—The batter braces should have a uniform angle of 3 inches per foot. Figs. 35 and 36 illustrate the method of forming tenons on the ends of batter braces and posts in framed bents and also show drainage holes bored from the bottom of the mortises in such a manner that any water collecting under the tenon will immediately flow

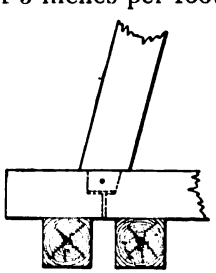

FIG. 35.

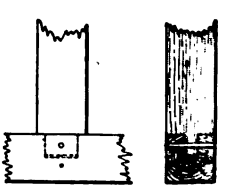

FIG. 36.

out through the drain, and this reduces the tendency the timbers have to rot. As a rule, timbers should be notched together as well as mortised, and Fig. 37 illustrates the notch and mortise in the sill for a batter brace, while Fig. 38 shows the notch and mortise for a post.

FIG. 37.

FIG. 38.

80. Illustration of a Framed Bent.—Fig. 39 is a dimensioned drawing showing a timber bent as used on one

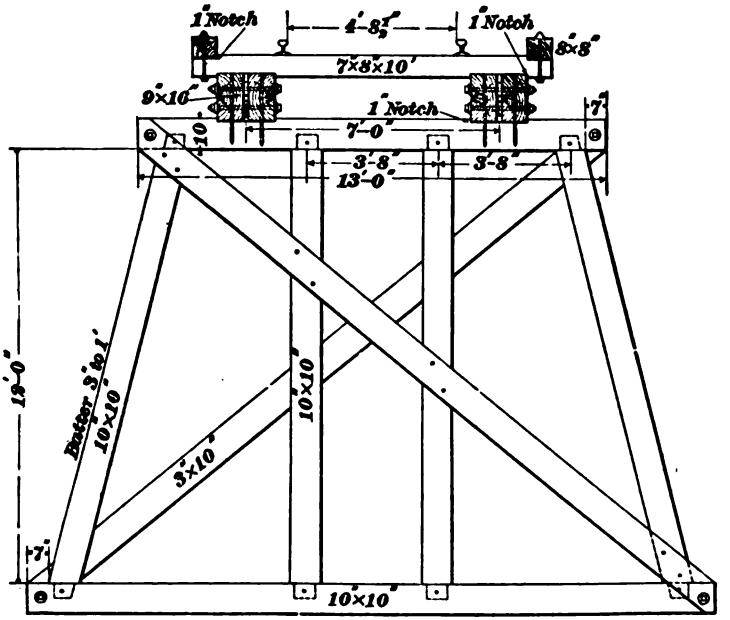

FIG. 39.

line of railroad. The gauge of the track is the standard for the United States, that is, 4 feet 8½ inches, and the dimensions on the drawing fully explain the various parts.

81. Elevation of Outer Rail.—Where the trestle comes in a curve on the railroad track, if it is intended that the cars should move at any considerable speed, it is

necessary that the outer rail be elevated. This may be accomplished by placing the cap at an angle and cutting the legs and batter braces of lengths to correspond, or a wedged block may be placed on the top of the cap and under the stringers, or one stringer may be notched down farther upon the cap than the other, so as to cause the ties to assume an inclined position, thus raising one of the rails above the other.

82. Framing of Buildings.—Most small buildings about a mining location can be framed of small stuff, without any special cutting of the timber, the pieces simply being spiked together to form a balloon frame, which is

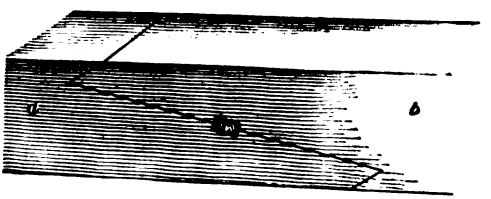

FIG. 40.

covered with either siding or corrugated iron. When it becomes necessary to build somewhat heavier structures, some form of framing may be employed. The different joints

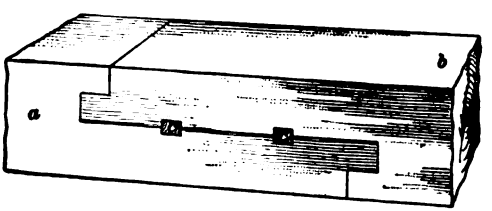

FIG. 41.

used in framing are all similar to those illustrated in connection with the trestle-work, and consist mainly in the use of tenons or notching the timbers together. When timbers have to be joined in the direction of their length, special joints or a different method may be necessary. When two timbers are joined without an increase of size, it is called a "scarfed" joint. Fig. 40 illustrates one form of scarfed

joint in which the timbers *a* and *b* are joined as illustrated, and are held in place by means of the key *c*. Fig. 41 illustrates another form of scarfed joint, which is better adapted for resisting end thrusts, and in which the timbers *a* and *b* are held together by two keys *c* and *c*. Usually scarfed joints are strengthened by means of iron or wooden plates called

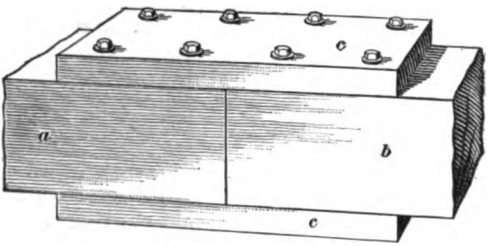

FIG. 42.

fish-plates, and when these are set into the wood in such a manner as not to increase the size of the timber, it is still a scarfed joint, but when the pieces used for joining the timbers are simply bolted on to the outside, as illustrated in Fig. 42, the joint becomes a pure fished joint, and the plates *c* and *c* are called fish-plates.

83. Heavy Framing By Cutting Joints.—One form of heavy framing is illustrated in Fig. 43. The heavy sill timbers *a* are secured to the timbers *b* by notching into each timber as shown in the illustration and also by the use of drift-bolts. The posts *c* are fastened to the timbers *b* by means of tenons and treenails or pins. The timbers for the second floor *e* and *d* are united by notching and by drift-bolts, while the posts *f* for the next upper story are secured by tenons and treenails. The braces *g* are notched into the posts and sills and secured by heel tenons and pins. Fig. 44 illustrates a tenon on the end of one of the braces. The floors may be formed by using joists *i* the same depth as the timbers *b* and notching them on to the sills *a* to the same depth the timbers *b* were notched down. After this the floor *k* can be laid on top of the joists and the timbers *b*. Where the braces do not extend the full

width of the post, they can be placed either flush with the outside of the building, as illustrated, or centrally on the

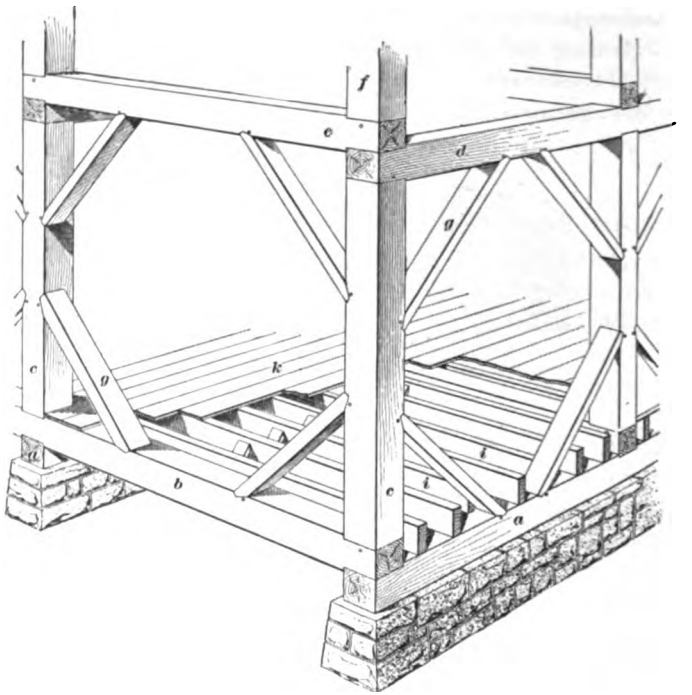

FIG. 43.

timbers. The manner of placing the braces flush with the outside as illustrated has the advantage that whatever form of siding is employed, it will be secured to both the posts and the braces, and will thus aid in stiffening the building.

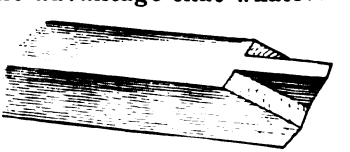

FIG. 44.

84. Heavy Framing Without Cutting Joints.— Fig. 45 illustrates another system of framing which is to a large extent on the balloon-frame order, for it has no mortise and tenon joints and very little framing of any kind. The sill timbers *a* and *b* may be notched together and secured by means of drift-bolts; the posts *c* may be

slightly notched into the timbers *b* and secured by drift-bolts. The braces *g* are simply pieces of plank cut and spiked as shown in the illustration, the pieces *h* being spiked against the posts or sills in such a manner as to fill the space between the ends of the braces. Where the floor joists *m* rest upon the sill *a*, it may be necessary to use a narrower piece between the braces, as at *i*, or to saw

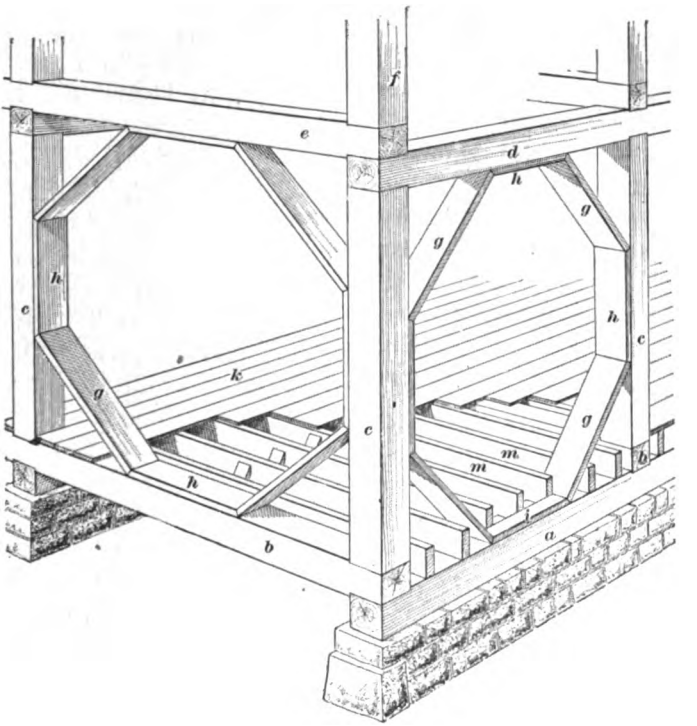

FIG. 45.

notches into the piece *i*, into which the joists can be placed. The timbers for the upper floor of the mill, *d* and *e*, are fastened together and to the posts *f* and *c* by slight notching and drift-bolting. In some cases no notching even is done, the posts simply being sawed off square and secured by large spikes or drift-bolts. The floor in this style of

construction is laid exactly as in the previous case and is shown at *k*.

85. Corbels.—Where it is necessary to join sills or large horizontal timbers on top of posts, corbels may be used, as shown in Fig. 46. The corbel *a* is bolted to the two timbers *b* and *c*, and the post *d* is usually tenoned into the corbel, while the post *a* may have a wide tenon and be secured to the timbers *b* and *c* by means of two treenails or pins. By making the corbels fairly long, they will help support the timbers *b* and *c*, thus relieving them of a portion of the weight they would otherwise have to carry. On this account, corbels are sometimes used on top of all posts, whether joints occur above the corbels or not.

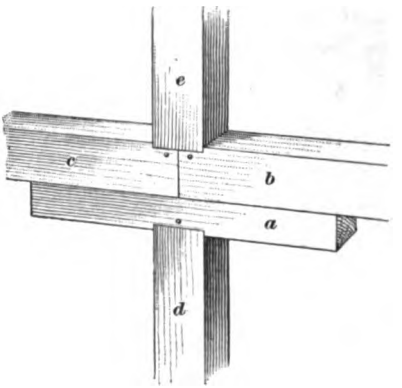

FIG. 46.

ORE DRESSING AND MILLING.

CRUSHING.

1. The metallic minerals are usually found more or less scattered through a gangue or matrix of such worthless minerals as quartz, calcite, etc. In the case of gold and silver minerals particularly, the gangue is, as a rule, largely in excess of the metallic mineral. The mineral occurs in scattered grains and bunches throughout the gangue, however, and by crushing the ore we may to a large extent disengage the metallic mineral from the gangue. The mineral and gangue can then be separated by mechanical means (concentration), or the ore may be in such a condition that the metallic values can be reached and leached out by chemical reagents.

2. The crushing of ores is accomplished, according to the various methods of extraction of mineral values, in several different ways, which may be summed up as follows: (1) Crushing by jaw crushers; (2) crushing by gyratory crushers; (3) crushing by rolls; (4) crushing by stamps; (5) crushing by roller-mills; (6) crushing by ball pulverizers; (7) crushing by miscellaneous crushers and pulverizers.

WET AND DRY CRUSHING.

3. The operation of crushing may be performed either *wet* or *dry;* that is, water may or may not be introduced into the machines along with the ore—this depending upon the method of recovery (extraction) to be employed. In either case the apparatus is essentially the same, the only modifications being in details.

For notice of the copyright, see page immediately following the title page.

4. Wet Crushing. — The ore is crushed wet when water is used in the subsequent operations, or at least does not hinder them. The use of water in the machine is desirable whenever possible, as it prevents dust, lessens the wear on the apparatus, and facilitates crushing by keeping the discharge opening clear of crushed ore. Wet crushing is universal in preparing ores for wet concentration and amalgamation.

5. Dry Crushing.—When an ore is to be leached in vats, it is necessary that the bed of ore in the vat be porous, so that the leaching solution will penetrate the entire mass. In such cases, the ore is crushed dry, as wet ore would pack so as to be nearly impervious to the leaching solution, and the solution would force passages for itself around the sides of the vat, leaving a large portion of the bed untouched.

Dry crushing is also generally used in preparing ore for roasting—as in the case of sulphide ores to be treated by chlorination or amalgamation in pans—and for smelting.

CRUSHING MACHINERY.

6. For convenience in classification, crushing machinery may be treated, according to the purpose for which it is designed, under two general heads: *rock-breakers* and *comminuting machinery.*

ROCK-BREAKERS.

7. Ore as it comes from the mine is usually in lumps varying in weight from a few ounces to many pounds. The purpose of rock-breakers is to reduce this ore to an approximately uniform size convenient for further working, and also to lighten the duty of any further crushing apparatus which may be necessary. Under this head are included the first two classes of apparatus mentioned in Art. **2.**

JAW CRUSHERS.

8. Figs. 1 to 3 show the principle of jaw crushers. The ore is introduced between the jaws, one of which is stationary

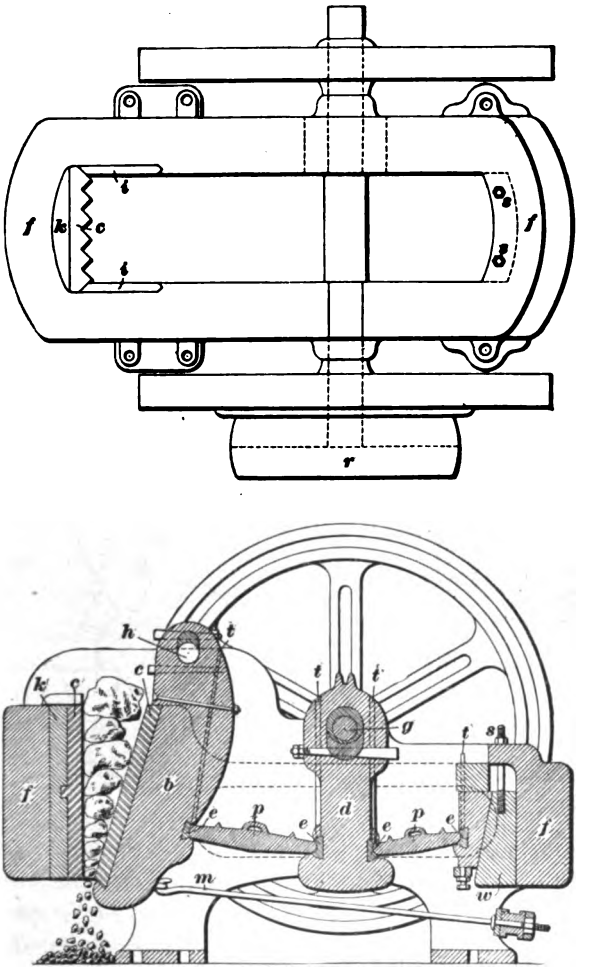

FIG. 1.

and the other reciprocating. The reciprocating jaw is pivoted at the top, as in Fig. 1, or at the bottom, as in

Fig. 2, and worked by an eccentric or a crank and toggle-joint. The whole machine is encased in a heavy cast-iron frame. The jaws are faced with plates of chilled white iron or steel. The crushing faces of the jaw plates are usually cast with vertical, angular corrugations, as plates so cast give a larger crushing area for the same width than smooth plates, and have been found to produce a smaller proportion of "fines," or dust.

Reciprocating-jaw crushers are of two general types: *Blake* and *Dodge*—named after the inventors of the original machine of each type.

9. Blake Crusher.—The Blake crusher is the top-pivoted type, Fig. 1. The entire frame is usually cast in one piece *f f*. The pulley *r* travels at the rate of 225 to 250 revolutions per minute, and may run in either direction. The swinging jaw *b* is hung at *h*; *d* is the connecting-rod,

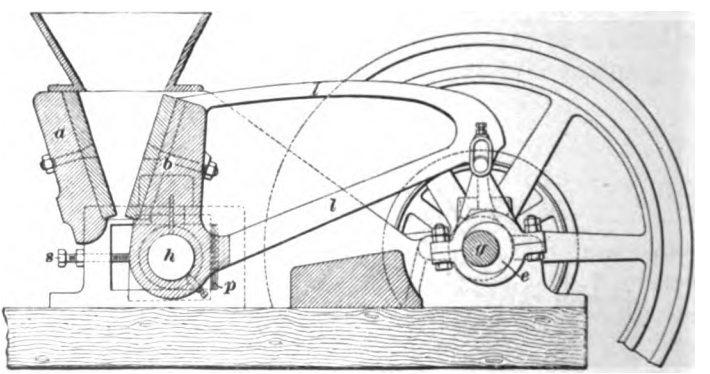

FIG. 2.

or pitman, operated by an eccentric on the main shaft *g*. As the pitman is raised and lowered with each revolution of the shaft *g*, the toggle plates *p*, *p* impart a reciprocating motion to the jaw *b*; *c*, *c*, *c*, *c* are steel bearings which are lubricated through the tubes *t*, *t*. A tension-rod *m* connects the jaw *b* with a coiled steel or rubber spring, insuring a rapid return of the jaw after each stroke. The jaw plates are shown at *c*, *c* The stationary jaw *k*, against which the

plate *c* is held by the check-plates *i*, *i*, is bedded in zinc ¼ inch thick, directly against the frame. The discharge opening is regulated by the wedge *w* with the screws *s*, *s*.

10. Dodge Crusher.—The Dodge crusher is the representative of the bottom-pivoted type, Fig. 2. An eccentric *e* on the shaft *g* gives a rocking motion to the lever *l*, which is cast in one piece with the jaw *b* and pivoted on the jaw shaft *h*. The stationary jaw *a*, as in the Blake crusher, is cast as part of the frame. The jaw shaft rests in sliding boxes, with set-screws *s*. Packing strips *p* are used between the frame and the shaft boxes, to take up wear or regulate the size of the product. The set-screws should always be tight, with lock-nuts set, while crushing. The shaft makes from 200 to 350 revolutions per minute.

11. Comparison of the Two Types; Their Uses.—It will be noticed on referring to the illustrations that in the Blake crusher the greatest movement of the jaw is at the discharge opening, while in the Dodge the reverse is the case. This difference in construction is the basis for all the other points of difference between the two types. Thus, in the Blake crusher, as the discharge opening varies in each stroke by the full throw of the jaw, there is a corresponding variation in the size of the product, and the only control the operator can have over the latter is the fixing of the maximum size which shall pass the crusher.

In the Dodge crusher, on the other hand, the discharge opening being the nearest point of the crushing space to the center of motion of the movable jaw, its variation is very small—so small, in fact, that for all practical purposes it may be considered constant. This allows of the Dodge crusher being used for a sort of rough sizing. For this reason they are considerably used in large concentrating works between the Blake crusher (or other coarse rock-breaker) and the rolls, to deliver a more uniform product to the latter.

The capacity of the Blake crusher is much larger, on account of the variable discharge opening, which reduces

the tendency of the ore to clog; but at the same time this renders crushing to any degree of fineness and uniformity impossible. They are therefore used where the amount of material handled is large, while the use of the Dodge type is limited to mills of moderate capacity, or to secondary breaking in large mills, as previously mentioned.

12. Schranz Rock-Breaker.—In the Schranz rock-breaker, shown in section in Fig. 3, the motion, instead of

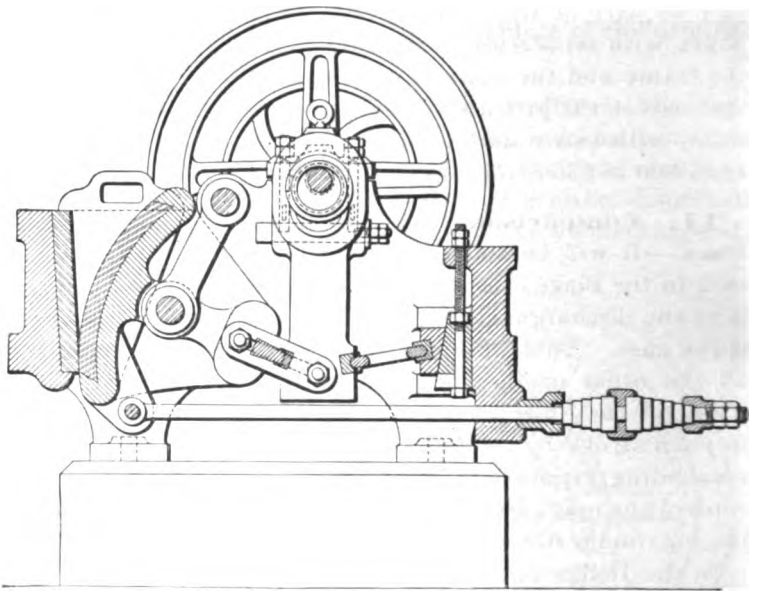

FIG. 3.

being reciprocating, as in the types previously described, is rocking, like that given to a curved blotter. The same principle is employed in the **Sturtevant roller-jaw crusher.**

13. Multiple-Jaw Crushers.—For special work, multiple-jaw crushers are used. The movable jaw in this form is cut up into segments, each of which is worked independently. They are but little used in gold or silver milling.

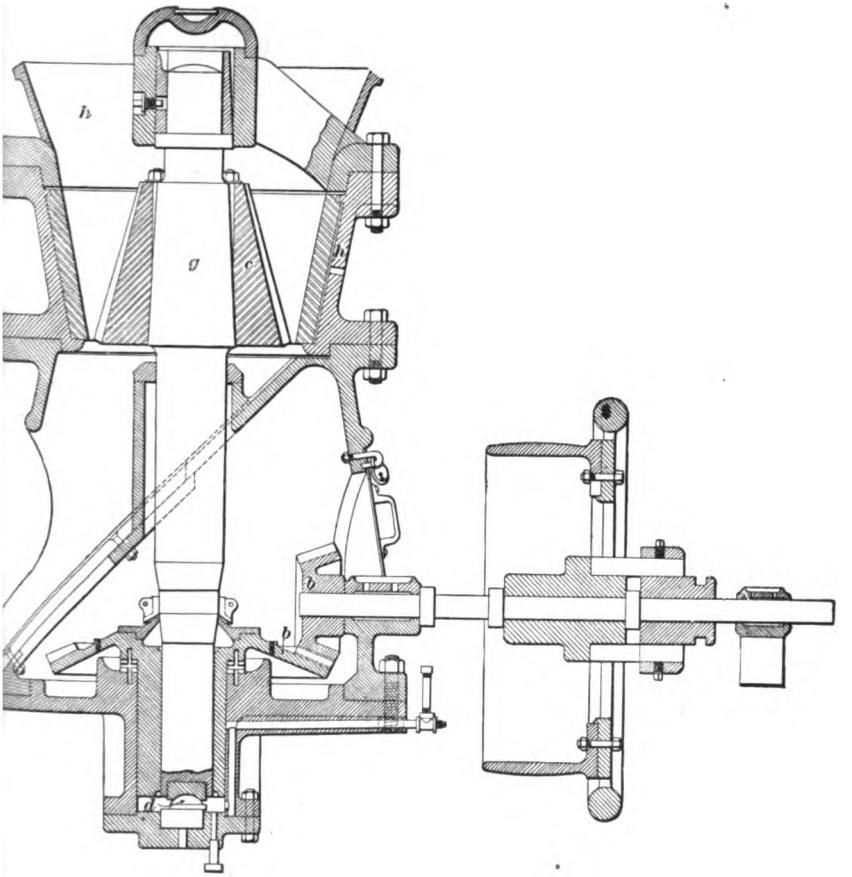

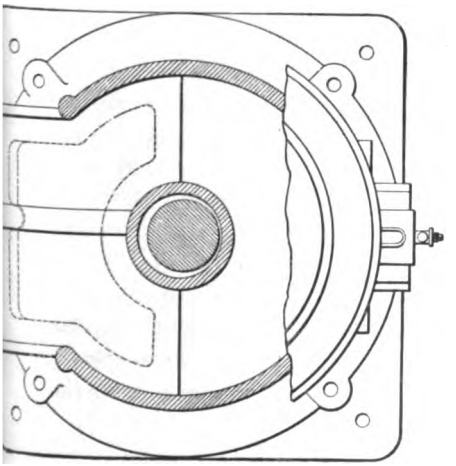

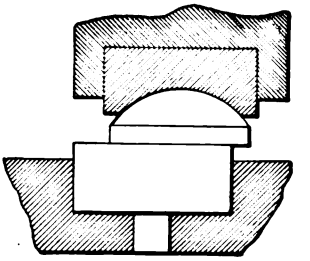

Lower Bearing

FIG. 4.

GYRATORY CRUSHERS.

14. These machines are sometimes called "coffee-mill" crushers, and are in part an application on a large scale of the familiar principle of that useful article. They consist essentially of a heavy cast-iron frame, the upper portion of which is a conical hopper *h*, Fig. 4, passing up into the bottom of which is a heavy chilled-iron crushing head *c*, in the shape of the frustum of a cone. The block is keyed to a vertical spindle *g*, operated from below by bevel-gears *b*, *b*. The bottom of the spindle is set about ½ inch out of center, so that a gyratory motion is given to the crushing head as it revolves.

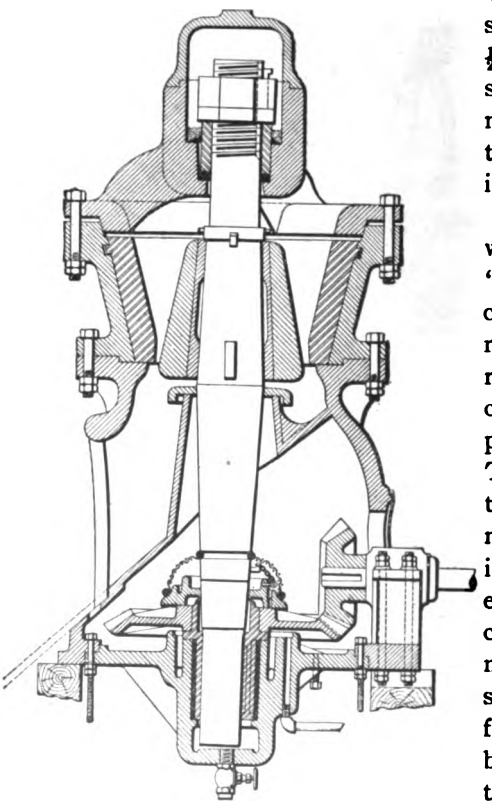

FIG. 5.

The hopper is lined with chilled-iron "liners," and the crushing head is corrugated, in order to reduce the slip, and consequently the proportion of fines also. The adjustment of the crushing head is managed differently in the various crushers of this type, according to the manner in which it is supported. In most forms, the crushing block is keyed fast to the spindle, and the weight of the whole falls upon the lower bearing *d*, as in Fig. 4; in others, the shaft and head are suspended by a collar bearing at the

upper end, as in Fig. 5. In both of these forms, the adjustment is made by raising or lowering the spindle. Another form presents a combination of these two, the crushing head

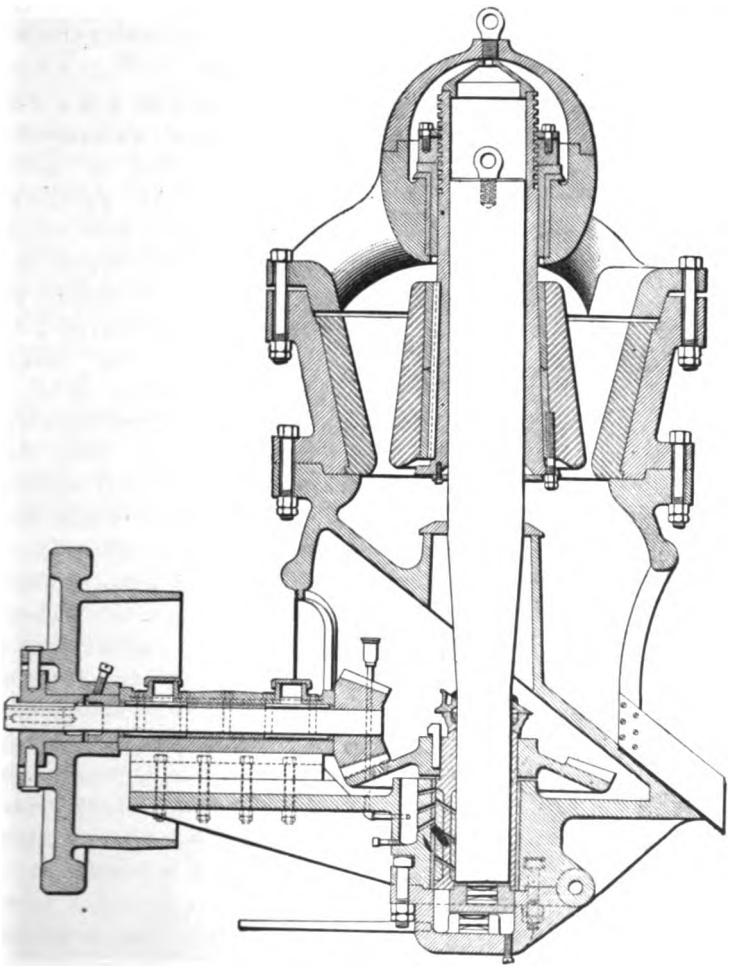

FIG. 6.

being supended and adjusted from above, while the spindle is supported by a pivot bearing below, as in Fig. 6, the vertical movement of the head being independent of the

spindle. The position and "set angle" of the spindle are thus kept constant, and the wear is divided between two bearings instead of falling entirely on one. Fig. 7 shows a gyratory crusher set up.

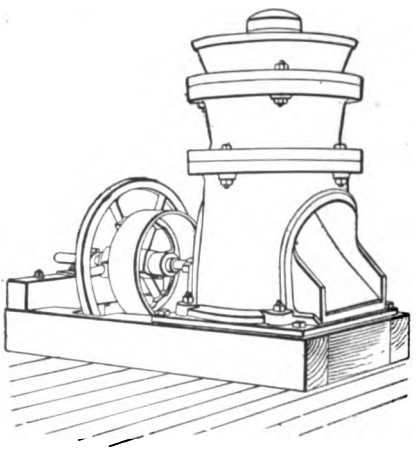

FIG. 7.

15. Compared with Jaw Crushers. —On account of their great capacity, gyratory crushers are now to a considerable extent replacing jaw crushers in works having a large output. With the large sizes, the ore can in most cases be dumped directly from the car into the hopper, thus dispensing with the services of several men in each shift, who would have to be employed, were jaw crushers used, to feed the ore into the crushers. Moreover, the jar caused by jaw crushers in operation is enormous—so great, in fact, that they are frequently set on timbers independent of the rest of the framework, to save the mill from the strain. With the gyratory crushers, the motion being uniform and all in one direction, the jar is much less. These crushers are made of capacities varying from 1 ton to 200 tons per hour. Only in the larger sizes, however, are their advantages very apparent. For smaller enterprises, the advantage of the large hopper being lost, the only one that remains is the freedom from jar, which is usually more than offset by the difference in price.

COMMINUTING MACHINERY.

16. Comminuting machinery is a general name embracing all machinery for reducing ore to sizes smaller than can be conveniently attained by the rock-breakers previously

described. Under this head is included all crushing apparatus not treated under the head of rock-breaking machinery.

ROLLS.

17. Rolls are peculiarly adapted, from their construction, to crushing ore to definite sizes with the least possible production of fines. The crushing is done between the surfaces of two cylinders revolving in opposite directions on parallel, horizontal axes, and the pressure is nearly in the line of the radii at the point of contact; hence there is very little rubbing action and a correspondingly small proportion of fines.

Rolls may be driven at any speed desired. For very fine crushing a high speed is desirable, while for coarser work the speed is relatively slow; a peripheral speed of 200 feet per minute is considered the minimum and about 1,500 feet per minute the maximum rate of speed. They are commonly driven by belt and pulley, though geared rolls are considerably used.

18. The ordinary form of crushing rolls consists of two rolls set in a strong cast-iron frame, with their axes parallel and in the same horizontal plane, as shown in Fig. 8. One of the rolls is journaled in fixed bearings, cast as a part of the frame. The bearings of the other roll are arranged to slide horizontally, to allow of adjusting the rolls and also to prevent rupture of the machine in case an extra large piece of rock should be drawn through without crushing, or some very hard substance, such as a hammer head, should accidentally get into the ore and pass into the rolls. The adjustable roll is held in position by rods which terminate in some safety device, so that, in case of such an accident as we have mentioned, the pressure will force the rolls apart and allow the obstruction to pass through. This was formerly done by means of cast-iron "breaking cups," used as washers for the adjusting rods. When the pressure became excessive, the cups would break and allow the roll to slide back.

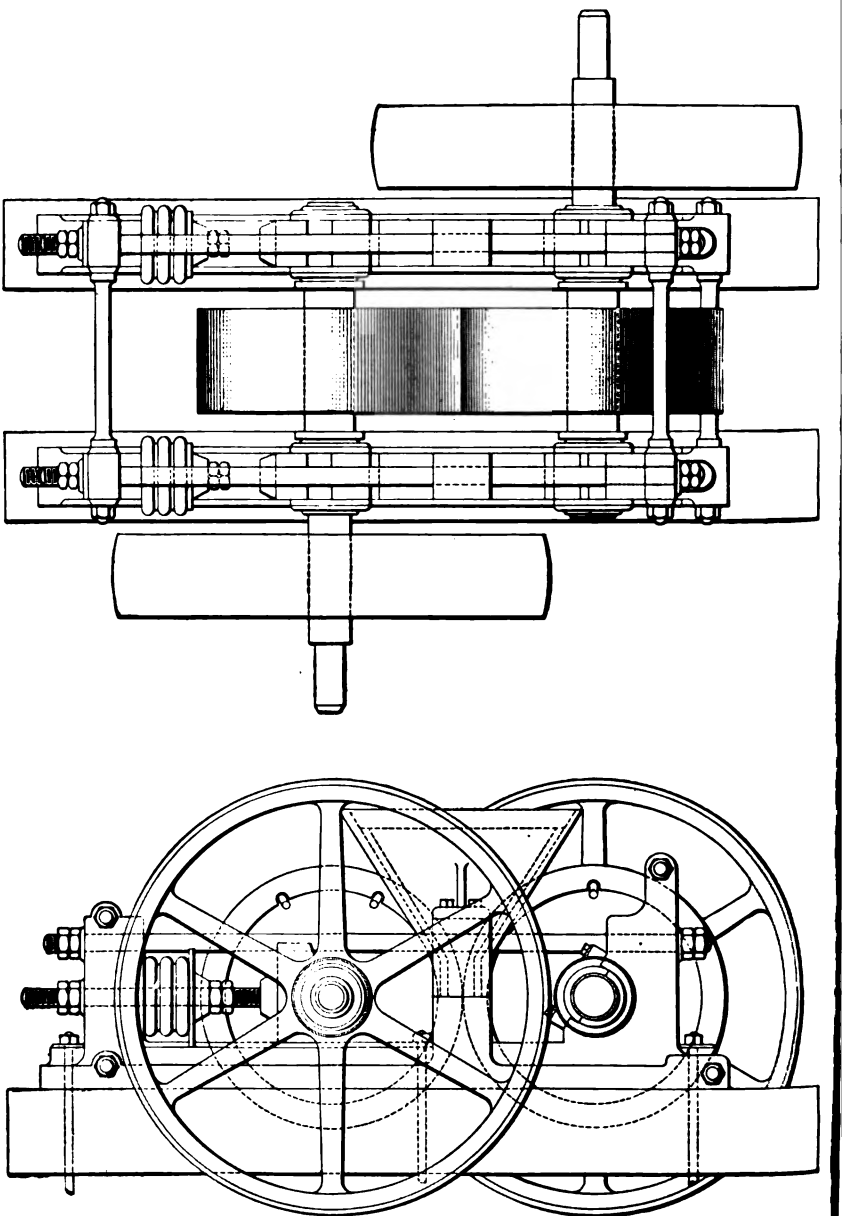

FIG. 8.

This scheme, however, had its drawbacks, for, although the cups were inexpensive, every time one broke the rolls had to be stopped until it could be replaced, and frequently the whole mill had to wait upon the rolls, causing a considerable loss. Coiled steel and rubber springs were also used, but they yielded more or less to every change of pressure and made a uniform product an impossibility.

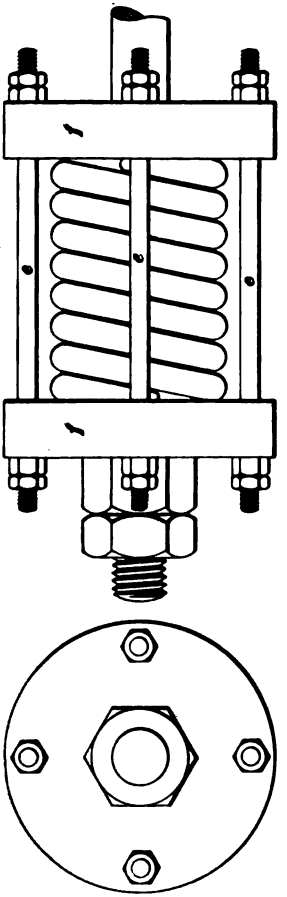

FIG. 9.

All these difficulties were finally overcome at one stroke by Mr. S. R. Krom, who substituted compressed springs for the breaking cups and springs on the adjusting rods. This principle is now applied to all up-to-date rolls. The spring is put in a frame *f*, *f*, Fig. 9, and compressed to the desired limit, say 25,000 pounds, and then fastened by means of nuts on the rods *e*, *e*, so that it can not relax. The compressed spring is then placed as a washer on one of the rods that draw the adjustable roll into position. The roll is thus held in place by a force of 50,000 pounds (25,000 pounds on each side). The moment the force tending to force the rolls apart exceeds this limit, the springs are further compressed, the adjustable roll slides back, and the obstruction passes harmlessly through. The springs then relax, return the roll to its original position, and work goes on without even a pause.

In the **Rogers rolls** the axes of the rolls are not in the same horizontal plane, but are in a plane inclined at an angle of about 45°, so that the upper roll practically rests

upon the lower while the machine is in operation. The upper roll is an idler, being driven by friction from the lower roll. It is set in a sliding bearing, and is held in position by its weight alone, no rods or springs being used except in the small sizes, in which the weight of the roll is not sufficient to perform the crushing satisfactorily. Rolls of this type are only adapted to comparatively fine crushing, as they would have to be built inconveniently heavy in order to get weight enough in the idler roll for satisfactory coarse crushing.

One of the latest improvements in the construction of rolls dispenses with the sliding journal, its place being taken by the swinging pillow-blocks *b*, *b*, Fig. 10, which are pivoted at *p*, and carry the adjustable roll in fixed bearings *g*. As in the forms previously described, the roll is kept in position by tension-rods and compressed springs.

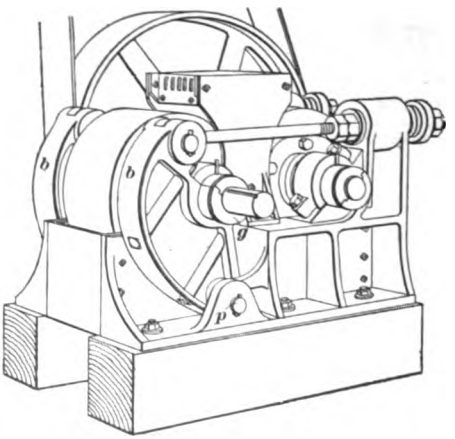

FIG. 10.

19. The power for driving the rolls may be applied to the shafts of either one or both of the rolls. With geared rolls it is almost invariably divided between the two, but with belt-driven rolls it is frequently applied entirely to the fixed roll, and the adjustable roll is driven by friction. It is preferable, however, to have both rolls driven directly, particularly when crushing comparatively coarse material, as this reduces the slip and also avoids the heavy blow resulting from the sudden starting of the idler roll while the driving roll is at full speed—something which is very apt to happen with idler rolls, which may be stopped by clogging. When both rolls of a belt-driven set of rolls are

driven directly, the pulleys on the two shafts are on opposite sides of the machine, and one is driven by a crossed belt and the other by an open belt, from the same countershaft, in order to secure reversed motions.

20. The wear on roll faces is necessarily very great, so that for economy they are made as interchangeable chilled-iron or wrought-steel shells, which fit on over a turned core, usually tapered. When a shell is worn out, the caps of the bearings are removed, the roll is lifted, and the old shell removed and a new one substituted. When the shells of fine rolls become so worn that they can no longer be used for fine crushing, they are used on the coarse rolls until worn out, or roll faces may be turned down and the rolls readjusted. With chilled-iron shells the amount which can be thus removed is limited to the depth of the chilling, but steel shells may be turned down until they are so thin as to be no longer safe.

21. Application.—While rolls may be used for any purpose for which approximate sizing is necessary, by far their largest application is in concentrating works, preparing ore for the jigs. As before mentioned, they are frequently used, instead of the jaw crusher, for secondary crushing, even when uniformity is not a desideratum; other fields are in the preparation of ores for leaching, sulphide ores for roasting, etc. For dry crushing, rolls must be completely covered, or "housed," with wood or sheet iron, to confine the dust, but when ore is crushed wet, such housing is superfluous, except in the case of very high-speed rolls, which would splash considerably.

STAMPS.

22. Stamps are under certain circumstances the best known form of fine-crushing machinery. On account of their simplicity of construction and operation, they are peculiarly adapted to enterprises in which the seat of operations is remote from railway facilities, while their comparative cheapness recommends them for operations on

a small scale of a temporary nature or where the capital is limited. As a means of saving the mineral values of ore by amalgamation and concentration, they give a fair efficiency, varying with the character of the ore, the completeness of the plant, and the skill and experience of the operators. The relation between their efficiency and that of a smelting or leaching process, in conjunction with the freight rates, frequently determines whether the ore is to be treated on the spot or shipped to the nearest smelter or reduction works.

In the case of gold-bearing sulphides, the method of treatment most commonly employed is a combination of both milling and smelting. The ore, if it contains any free gold, is crushed under the stamps, and any gold which may be freed from the pyrites is caught and taken into solution by the amalgamated plates of the battery. The rest of the crushed ore is passed over suitable apparatus, by means of which the light gangue materials are washed away and the heavier sulphides left, thus greatly reducing the ore in bulk, while retaining practically all the values. The sulphides, or "concentrates," are then shipped to the nearest smelter or reduction works for the final treatment. These processes are more fully described under the heads of "Amalgamating Machinery" and "Concentrating Machinery," while the stamp battery will be treated for the present only as a crushing machine.

23. The Stamp.—The stamp proper consists of a wrought-iron or steel "stem," 3 to 4 inches in diameter and 10 to 14 feet long, a cast-iron "head" or "boss," about 8 inches in diameter and 15 inches to 2 feet long, and weighing from 200 to 400 pounds, and a chilled-iron or steel "shoe." The two ends of the stem are interchangeable and slightly tapered, forming blunt conical wedges, the lower one of which is fitted tightly into a corresponding hole in the upper end of the boss. In the bottom of the boss is another hole, similar to that in the top, but larger, into which the conical shank of the shoe fits loosely, being

wedged in by strips of wood in wet crushing, or of iron in dry work; in the latter case, the head is strengthened by a ring shrunk around the bottom. The shoe is of chilled iron or forged steel, 4 to 6 inches thick when new—the construction is shown in Fig. 12—and constitutes the striking surface of the stamp.

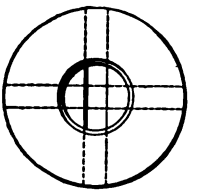

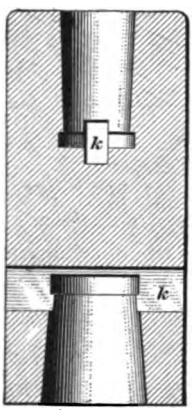

FIG. 11.

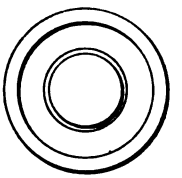

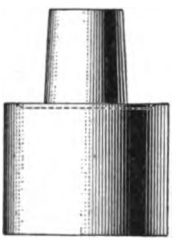

FIG. 12.

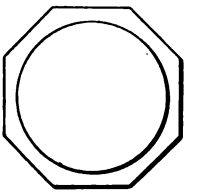

FIG. 13.

The shoe and stem may be released from the head by means of drift keys driven in through the slots *k*, *k*, Fig. 11.

24. The stationary die upon which the stamp falls is also of chilled iron or of steel, with a striking surface whose diameter is equal to that of the shoe and a rectangular or octagonal base, Fig. 13. The latter is preferable and is now almost universally used, as it saves iron and renders the removal of the dies easier when "cleaning up" the battery or making repairs. For dry crushing, round dies are used—preferably with lugs cast on the bottom, Fig. 14, which, by giving the dies a quarter turn in the recess in which they rest, catch and bind them firmly in position. Dies are also made with wedge-shaped bases,

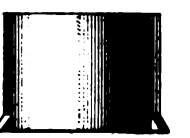

FIG. 14.

dovetailing into a socket in the mortar. Chrome steel is used quite largely for shoes and dies. Many mills use

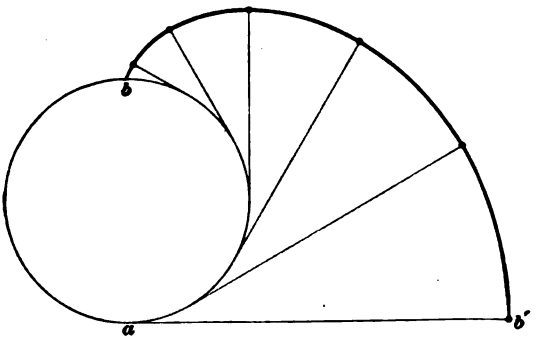

FIG. 15.

chrome-steel shoes and cast-iron dies; this arrangement is found to give a more even wearing surface than steel on steel, and the chrome-steel shoes, although they are more expensive than chilled iron, wear much longer and better.

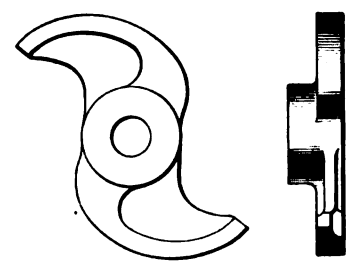

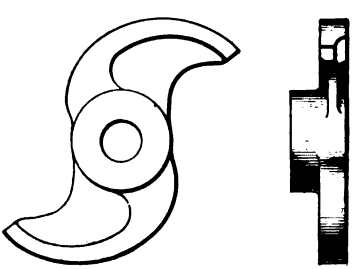

FIG. 16.

25. The stamp is raised by means of a double-armed cam keyed to a revolving shaft and catching under a tappet fastened to the stamp stem. The curve of the cam is laid off as the involute of a circle the radius of which is equal to the horizontal distance between the centers of the cam shaft and the stamp stem. The curve may be obtained by attaching, to any point *a*, Fig. 15, of a circular disk of the proper diameter, one end of a piece of string, which is then carried

around the circumference of the disk to a point *b* diametrically opposite the first point; now, holding the disk still, unwind the string, keeping it taut, and mark the line *b b'* which the point *b* traces. This line represents the lifting curve of the cam. In practice, however, the curve is slightly flattened at the end. Fig. 16 shows right and left hand cams (revolving to the right and left, respectively, as you face the hub side).

Cams are usually fastened to the shaft, which is of turned wrought iron or soft steel, by carefully fitted steel keys in longitudinal seats. There are usually two of these seats in each shaft, one-third of the circumference of the shaft apart, though formerly one seat sufficed for all the cams of a set. A later form of fastening is a taper bushing. The bushing is first fastened to the shaft by means of pins in holes drilled for them, as in the Blanton cam, Fig. 17, or by the device shown in Fig. 18, and the cam is then slipped on. The bushings tighten automatically and give a more even bearing than the ordinary key. They possess the further advantage of being much easier to adjust and remove than the old form; in fact, an entire set of cams with this fastening can be removed and replaced in the same length of time that is frequently required for the removal of a single cam with the old fastening.

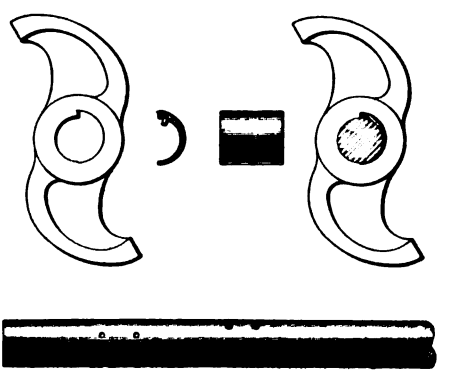

FIG. 17.

The cam shaft is driven by belt and pulley from a countershaft. The cam-shaft pulley is always built of wood, on an iron hub, while the countershaft pulley is iron. The countershaft pulley is either fixed or has a friction-clutch. The belt is kept taut by ordinary tightening pulleys.

The cam lifts the stamp gradually, and at the same time revolves it so that it can not fall twice in succession in the same position. When the stamp is raised to the end of the stroke, or "drop," the cam slips from under the tappet, and the stamp, weighing from 600 to 1,000 pounds, drops.

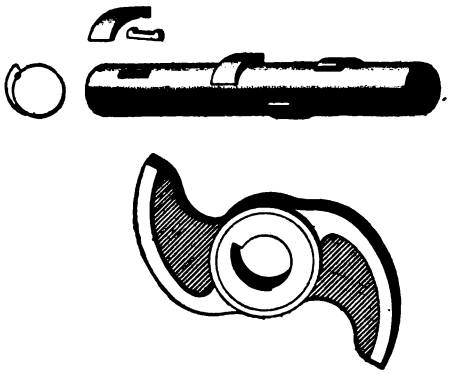

FIG. 18.

26. The tappet, by means of which the stamp is raised, is shown in section in Fig. 19. It is made of cast iron, bored true inside, and is fixed to the stem by means of a gib in *g*, which is pressed firmly against the stem by the keys shown in Fig. 20. The wear on the stamp and die is met by raising the tappet so that the drop is kept constant.

When a battery is "hung up" for cleaning up or repairs, the stamps are supported by hardwood "fingers," tipped with iron, which are fixed in sockets on a jack-shaft, usually at the back of the battery. There is one jack-shaft to each battery of stamps. The fingers are moved independently of one another by a handle in the back. They hold the tappet high enough to clear the cam in its revolution. To hang a stamp, a tapering stick faced with iron is inserted between the cam and the tappet, raising the latter so that the finger can be slipped under. Stamps are released in the same manner.

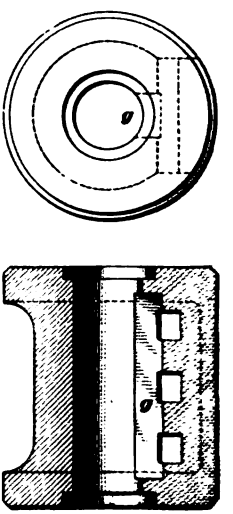

FIG. 19.

27. Stamps are usually arranged in batteries of five stamps each, working in a heavy cast-iron mortar, in the bottom

of which are placed the dies. Two and three stamp batteries are made for prospecting purposes; and steam and pneumatic stamps, which are described further on, have only one stamp to the mortar. There are very few permanent gravity-stamp mills, however, of less than 10 stamps, and the number of stamps usually increases in multiples of 10, the batteries being set in pairs, with the middle battery post common to the frames of both. The cams of both batteries are fixed on the same shaft, which is supported in the middle by a bearing box on the common post. Instead of the double shaft, two short shafts are sometimes used with one common bearing.

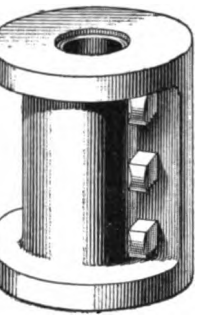

FIG. 20.

28. The Frame.—The frame in which the stamps move is usually made of well-seasoned, heavy timbers, bolted tightly together. Iron frames are also made, but they are not to be recommended where timber is available and the battery is intended to stand any length of time, as the jarring works the bolts and rivets loose and crystallizes the iron of the frames, rendering it brittle and apt to break. They are very convenient, however, when a portable battery is desired.

Wood frames are of two general types: the A *frame* and the *knee frame*. The old A frame is, however, being rapidly superseded by the knee frame. In the A frame, shown in Fig. 21, the countershaft is usually placed on the battery sills, almost directly under the cam shaft, and the belt runs nearly vertical. With the knee frame the countershaft may be set level with the cam shaft, if desired, and the tightener dispensed with, and each battery may be driven independently by a friction-clutch pulley on the countershaft, so that it may be stopped and started without affecting the rest and independent of the motive power. Such a frame is shown in Fig. 22. The knees support a floor convenient in hanging up stamps and in inspecting and repairing the batteries.

The frames are braced either on the back or front, according as the countershaft is set behind or in front of the battery. Fig. 23 shows a back-knee frame with the countershaft on the battery sills.

The battery posts are usually of 12″×24″ timber, notches being cut for the cam-shaft boxes. Their lower ends are

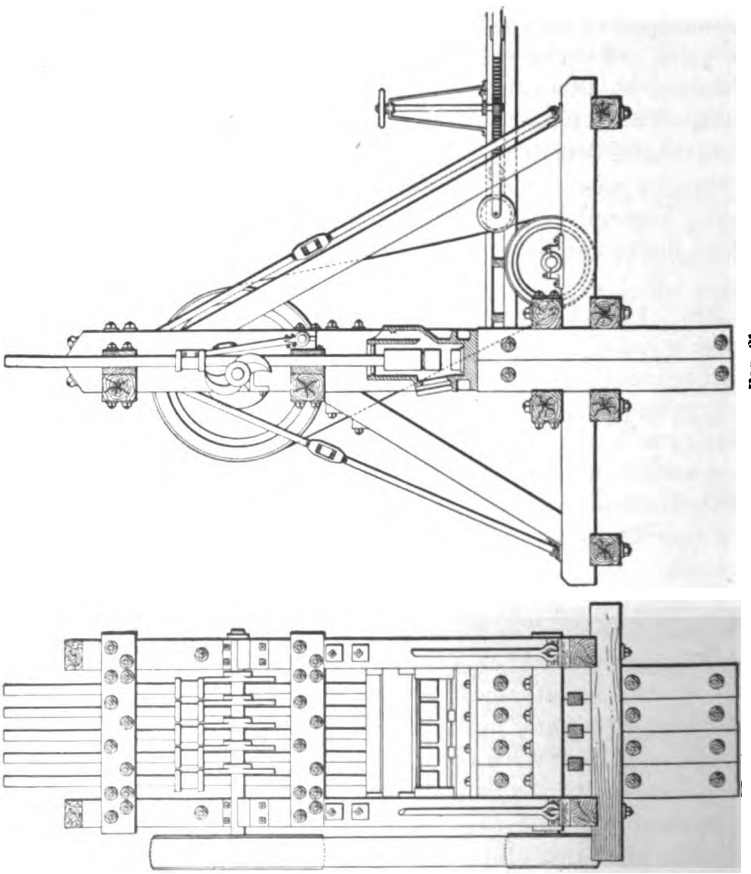

FIG. 21.

framed into the 12″×12″ sills. They are bound together by cross-timbers, of which there are four sets, as shown, the upper two being used as supports for the guide timbers,

while the two lower ones act as binders for the battery blocks. The frames are strongly braced for both tension and compression.

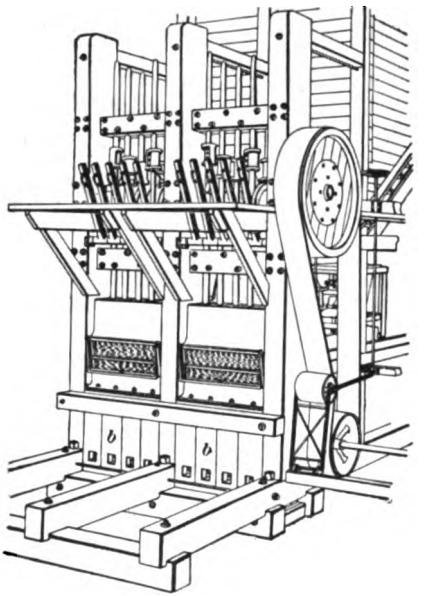

FIG. 23.

29. The Guides.— The stamps are directed in their fall by two sets of guides bolted to the cross-timbers of the battery frame. The lower set is generally about 18 inches above the top of the mortar, and the upper set about 7 feet higher. These guides are usually made entirely of wood, Fig. 24, though combination guides of wood and iron, as shown in Figs. 25 and 26, are considerably used, and present some advantages in the way of quick repairs and economy of timber, as scrap timber can be used for blocks, and the iron frame is practically imperishable. They also have the friction along instead of across the grain, which increases the life of the block. All-iron guides have also been tried, but are not as satisfactory as wooden and combination guides.

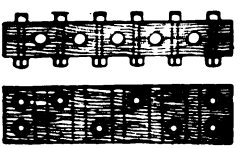

FIG. 24.

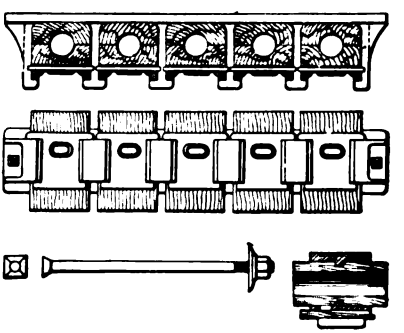

FIG. 25.

Wooden guides for an ordinary five-stamp battery are usually made of 4″ × 12″ hardwood plank. A guide consists of two timbers, bolted face to face and grooved on the

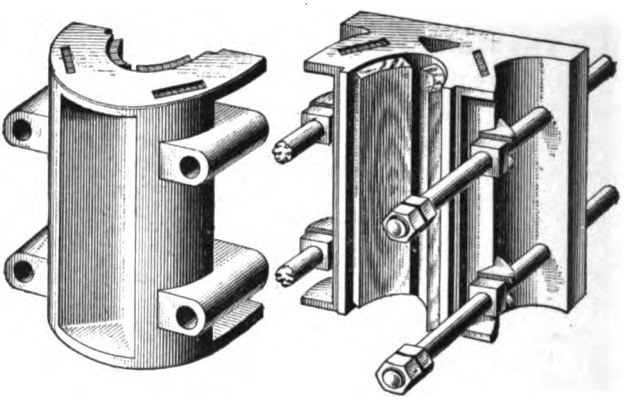

FIG. 26.

inner faces for the passage of the stamp stems. The grooves are not cut to their full depth, but are left slightly shallow, and thin strips of wood are placed between the two timbers. As the grooves wear deeper, these strips are removed and the timbers are drawn closer together, and after the blocks meet, the wear may be still further taken up by planing off the inner faces of the blocks. The guide-blocks fit in between the battery posts, and are held firmly against the back of the cross-timber by bolts passing through all three timbers. In case repairs are needed, the back block can be removed by simply taking off the nuts and drawing it off. Sectional guides of both wood and iron are also made—an independent guide for each stem (see Fig. 26).

Guides should be kept well lubricated with a paste of graphite and linseed-oil, care being taken that none of the lubricant gets into the mortar, as it would interfere seriously with the recovery of the gold.

30. The Mortar.—The mortar in which the crushing is done was in its primitive form merely a rectangular cast-iron trough, one of the sides of which was lower than the other, with the remaining height filled by a screen;

above this trough was a housing of wood, which constituted the upper portion of the mortar. From this "hog-trough" mortar the modern form has been evolved. Figs. 27 to 31 show the mortar as it is to-day, the older form having been abandoned because of the loss of mercury and amalgam between the cracks of the housing.

31. Mortars are built with either single or double discharge, that is, with an outer screen for the crushed ore in either one or both sides of the mortar. The double-discharge mortar is used mainly for dry crushing [see Fig. 28 (*a*)]. Fig. 28 (*b*) shows a double-discharge mortar suitable for wet crushing.

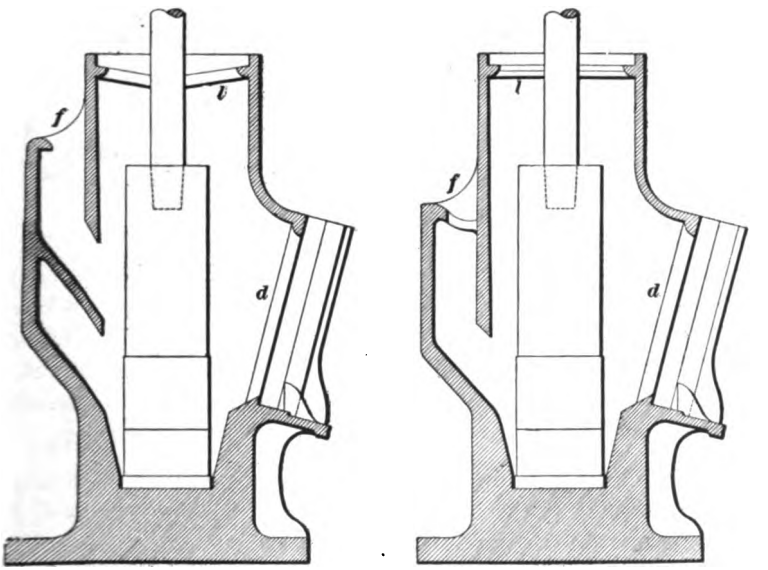

FIG. 27.

The ore is fed, either by hand or by an automatic feeder, into a slot *f*, Fig. 27, at the back of the mortar, and drops on to the dies and is crushed. The crushed ore finds its exit through the screen in the front of the mortar, or, in the case of double-discharge mortars, through screens on both sides, on to an apron plate or into collecting troughs. The

feeding of a battery, to obtain the maximum crushing duty, should be carefully regulated and kept just short of the point where the striking of metal on metal is noticeable. If it is allowed to get below this, breakage is apt to follow the uncushioned fall of the stamp upon the die, and even if no

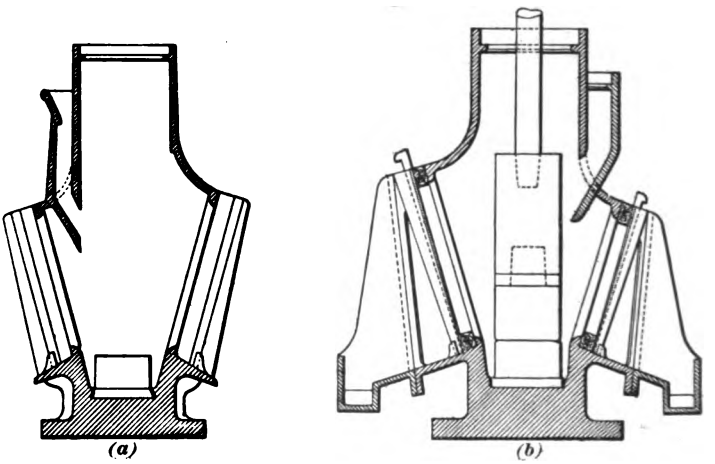

FIG. 28.

break occurs, a great deal of the energy of the fall will be wasted. On the other hand, if too much ore is kept on the dies, the cushioning is so great as to lessen the crushing efficiency of the stamp, the drop is shortened, and the packing of ore and pulp around the stamp between strokes causes an appreciable suction at the beginning of the up stroke.

32. The top of the mortar is covered tightly by "splash-boards," which are two boards resting on narrow ledges *l*, *l*, Fig. 27, cast on the inside of the mortar, their edges meeting in a close joint down the middle of the mortar, with semi-circular notches in each board for the passage of the stamp stems. These splash-boards are best set slanting slightly towards the center, as in Fig. 29, with their edges beveled to make tight joints. The feed opening *f*, Fig. 27, has a piece of canvas hung inside of it, which prevents the splash from coming in there, and another strip of canvas is hung in the upper part of the discharge opening *d*, above the screen

frame, which prevents the pulp from splashing out there and at the same time permits the insertion of the hand to

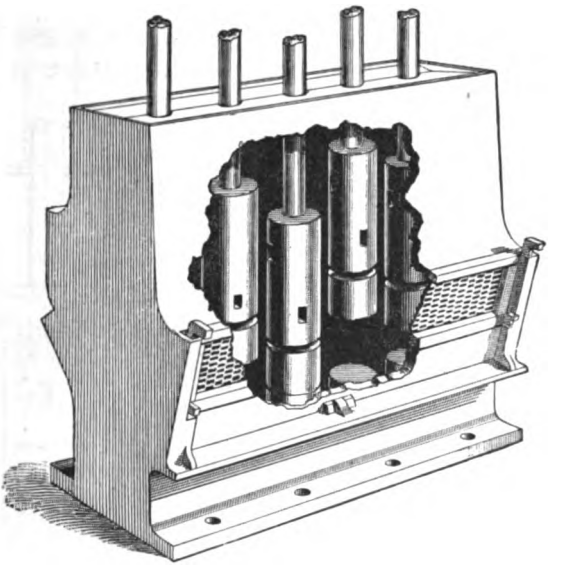

FIG. 29.

examine the condition of the inside amalgam and to clean the screens when they become clogged. A board is sometimes used instead of canvas over the discharge opening.

33. The "discharge," or height of discharge, of a battery is the difference in height between the tops of the dies and the bottom of the screen. It may vary from 4 inches to 16 inches in the different types of mortars. To regulate the height of discharge, "chuck blocks," usually of wood, are placed between the bottom of the discharge opening of the mortar and the bottom of the screen frame (see Figs. 30 and 31). As the dies wear away, these blocks may be replaced by lower ones, thus keeping the height of discharge nearly constant. In amalgamating mortars, the front amalgamated plates are fastened to the chuck blocks. The ordinary constructions are shown in Figs. 30 and 31, the copper plates being fastened on with iron screws to the

chuck blocks *d*. For amalgamating batteries, an iron chuck block, made by substituting for the inner block (*d*, Fig. 30) a ¼-inch iron plate, is better, as the copper plate is 1¾ inches farther away from the shoes, and the scouring action is consequently less, allowing the retention of more

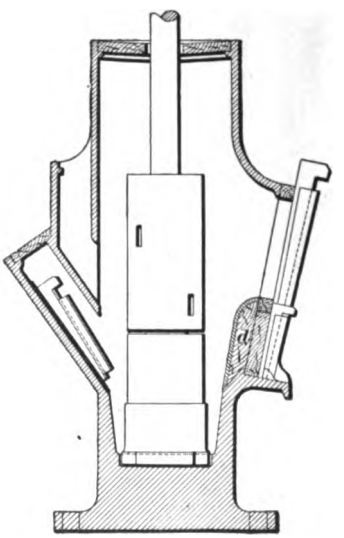

FIG. 30.

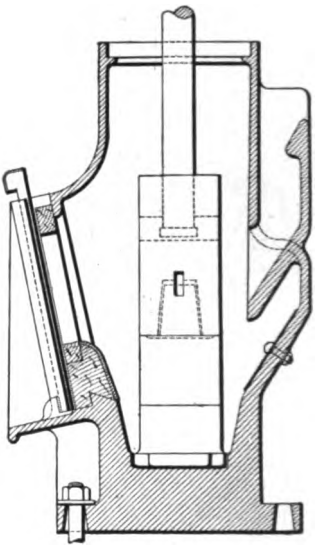

FIG. 31.

amalgam on the plates. The copper plates are riveted to the iron with copper rivets, which will not rust out, and the iron itself will last as long as the battery.

34. Lined Mortars.—For mills which are distant from any foundry and have not the facilities for doing their own casting, mortars are made with sectional iron or steel linings, which may be removed and replaced when worn out.

35. Sectional Mortars. — In some localities where transportation even by wagon is impracticable, the machinery has to be carried by mules. For this purpose, mortars are cast in sections, no part weighing over 300 pounds. The sections are carefully planed and bolted together, as

shown in Fig. 32. The upper part of the mortar is built up of wrought-iron or steel plates and angle-irons.

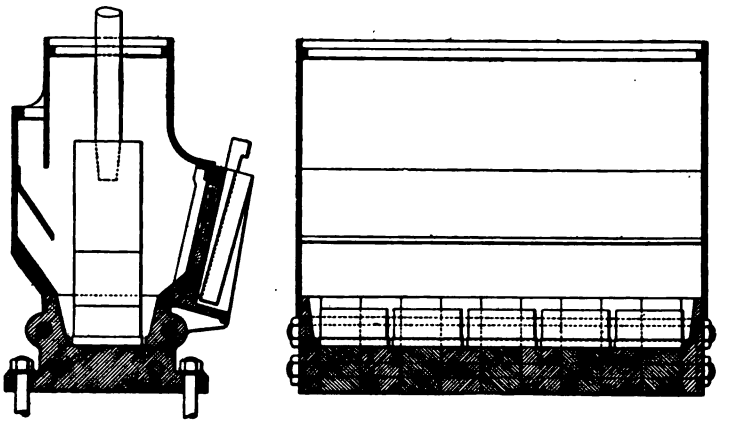

FIG. 32.

36. Screens.—The maximum size of the crushed product of a stamp battery is regulated by the size of the mesh of the discharge screens, and the efficiency of the battery depends to a considerable extent upon the care exercised in the selection of the screens. The size to be used on any ore should be determined by actual experimental runs, or "mill runs," with different mesh screens.

The screens are made from Russia-iron, steel, or copper plates, the holes being punched, or from steel or brass wire cloth. Screens of the latter material are suited only to wide mortars with a high discharge; in such cases, they allow a freer passage of the pulp, which would be apt to clog in punched screens. In low-discharge, narrow mortars, the punched screens are used almost entirely, as the increased force of the splash overcomes the tendency of the screens to clog, and they wear much longer than would wire screens, which, even in the wide, high-discharge mortars, last on an average only about one week. A Russia-iron screen is supposed to last at least two weeks before it cracks. Five per cent. of aluminum in copper makes an alloy (aluminum bronze) that lasts several times as long as Russia iron and

does not crack, and when the holes are worn too large, the screen can be remelted and made over.

Punched screens are either *slot* or *round-hole* screens. (See Figs. 33 and 34.) The slot screens are generally con-

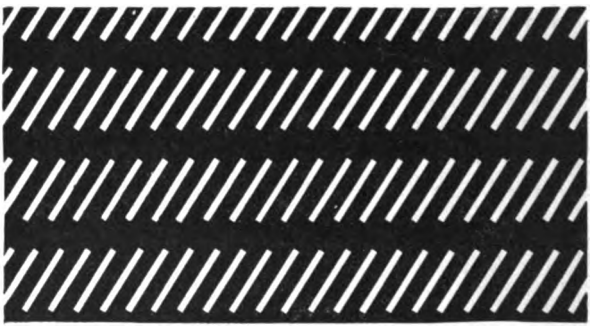

FIG. 33.

sidered the better form, with the slots running diagonally. Screens are also made with the slots in vertical or horizontal rows, parallel and alternating, and in "burred" or "burr-slot" screens, the rough edge is left on the inside of the

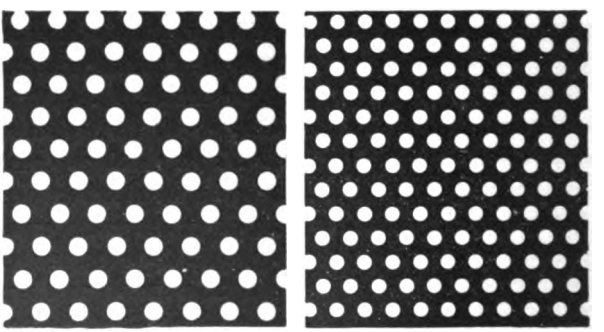

FIG. 34.

slot, and can be closed slightly as the slot wears by striking with a mallet.

37. Screens are fastened to rectangular wooden frames, which fit into the discharge opening of the mortars. For wire screens, the frame is divided by inch strips into three

or four panels, to prevent bulging, and diagonal-slot screens are strengthened by a mid-rib. A patented screen is also manufactured, with the screen fitting into the frame in sections which are independently removable. This effects a considerable saving in screen cloth, as the bottom sections, which wear out faster than the top, may be renewed independently of the top panels, whereas in the single screen, the life of the bottom is the life of the screen.

Screen frames are sometimes set vertically in the mortar, but the usual practice is to incline them slightly outwards at the top, as this increases the capacity of the battery, the discharge being assisted to a certain extent by gravity. The frame is placed in the mortar with the screen on the inside, the rough side of the screen, in the case of punched screens, being in. The frames are usually held in place by one horizontal and two or four vertical keys, Fig. 29, the frame being protected from the keys by strips of sheet iron screwed to it.

38. Order of Drop.—While the cams of a battery are all on one shaft, they are set so that the stamps fall one after another, usually in the following order: 1–4–2–5–3, supposing the stamps to be numbered consecutively from left to right, looking at the battery from the front. This order is preserved with a twofold object: first, to have the "swash" from side to side, so that each stamp as it falls will drive the ore and pulp under the one which drops next in order; and second, to distribute the pressure as evenly as possible and avoid any tendency towards rocking.

With a double battery (10 stamps) the scheme of dropping is extended to the whole ten stamps. Thus, starting at the left as before and numbering the stamps consecutively from 1 to 10, the order of drop would be as follows: 1–8–4–10–2–7–5–9–3–6. This order is sometimes varied according to the fancy of the designer or superintendent, but the idea is always to balance the strains throughout the battery.

39. Battery Blocks.—On account of the continuous and heavy jar to which the mortar is subjected, the timbers

on which it rests must be very strong and have a very solid foundation. The usual arrangement of the foundation timbers or "battery block" is as follows: A trench is excavated down to solid strata, if such can be found at a reasonable depth, but in any case at least 7 feet deep and about 3 feet larger both ways than the battery block. In the bottom is laid a horizontal timber, or mudsill, of the same surface dimensions as the horizontal section of the battery block; this is carefully leveled and tamped, and upon it are stood the vertical timbers which make up the battery block. The contact surfaces should be carefully planed (not sawed) to a perfect bearing. In very loose ground, where a good natural foundation can not be had, it is customary either to sink piles or to put in an artificial foundation of concrete.

The battery block proper is made up of planed timbers bound firmly together by bolts. Modern practice favors the use of smaller timbers, or even 2-inch plank, spiked together, with joints lapping, and held in place by horizontal binding timbers, which are fastened by transverse bolts. There are usually two sets of these binders, the upper set—made of $8'' \times 12''$ timber—being usually just above the battery sills and framed into them, and the lower set—usually made of $12'' \times 12''$ timber—3 or 4 feet lower down. When plank is used in building up the block, the two upper binders are put flush with the top of the block. When large timbers are used for the block, the lower binders are sometimes omitted.

Plank blocks were first built with the faces of the plank parallel to the short dimension of the block, but this arrangement has given way to that in which the width of the plank runs lengthwise of the block (see *b*, *b*, Fig. 23), as this form is more convenient for repairs, it being only necessary, in replacing a block, to open up the front of the block and raise the mortar, when the plank can be torn out with picks. Plank blocks are much cheaper than the old form of block, made up of two or three huge timbers, which were clumsy to handle, awkward to work, and, moreover, expensive and difficult to obtain in clear lumber.

40. The battery block being in position, the tie-bolts are tightened until there can be absolutely no play between the various members. Dirt is then thrown in around the bottom and tamped lightly to hold the block in position, and the top is planed perfectly level. The holes for the anchor-bolts are then bored and the pockets for the nuts chiseled out. A sheet of rubber ¼ inch thick is usually next laid on the block, with holes for the passage of the anchor-bolts; the latter are put in, and the mortar is set in place and bolted firmly down. The pit is then filled and firmly tamped.

The anchor-bolts are 3½ to 4 feet long and 1½ inches in diameter, and are usually threaded at both ends, pockets being cut in the block for the lower nuts. The lower ends are sometimes turned into rings instead of being threaded, and 2-inch iron bars running horizontally through the block from side to side pass through these eyes, each bar serving for two anchor-bolts on opposite sides.

41. In erecting a battery, all bearing surfaces should be planed perfectly true and level, and the centers of gravity of both mortars and stamps should be as nearly as possible in the same vertical plane as that of the battery block, to avoid rocking, which would tend to throw the battery out of line and cause the parts to wear unevenly, greatly shortening their life.

42. Steam Stamps.—Besides the ordinary "gravity-stamp" mill just described, there are in use steam stamps. In the steam stamp, the stamp stem is the piston-rod of a piston moving in a vertical steam-cylinder. The stamp is raised by the steam entering through the lower ports, and when it reaches the top of the stroke the bottom exhaust opens suddenly, and at the same instant live steam is admitted through the upper ports, adding impetus to the fall of the stamp. The valve mechanism is such that the piston descends under full boiler pressure of steam, while the pressure on the up stroke may be regulated at will. Steam stamps dispense with the use of a mortar block

(battery block), the anvil on which the mortar is built being set on spring timbers, as shown in Fig. 35, with 1 inch of rubber between the timbers and the anvil; or the anvil

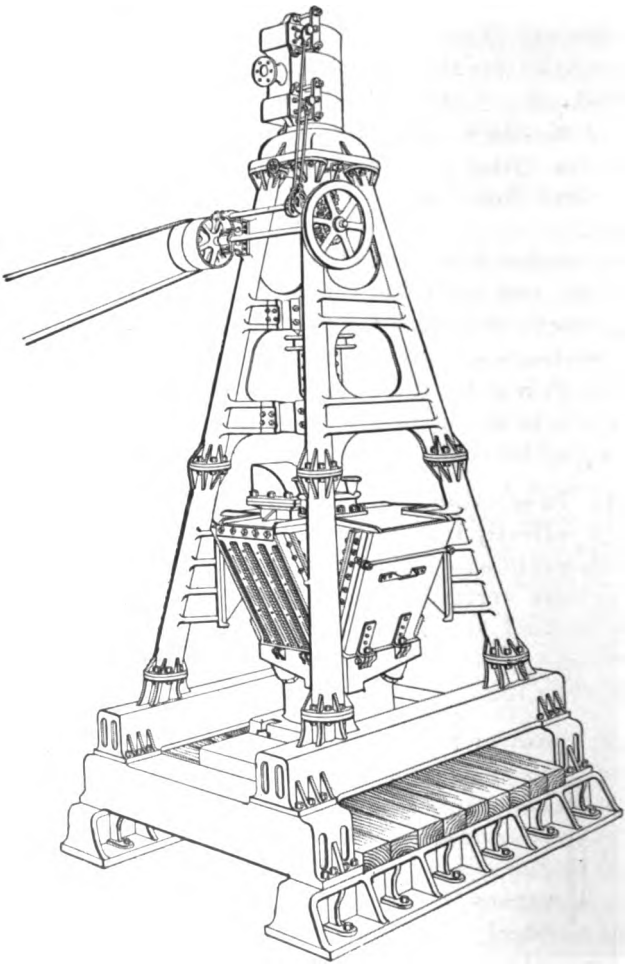

FIG. 35.

may be set on a solid cast-iron anvil-block, Fig. 36. It is claimed by the manufacturers of the latter style that it increases the crushing capacity; but, while this is probably

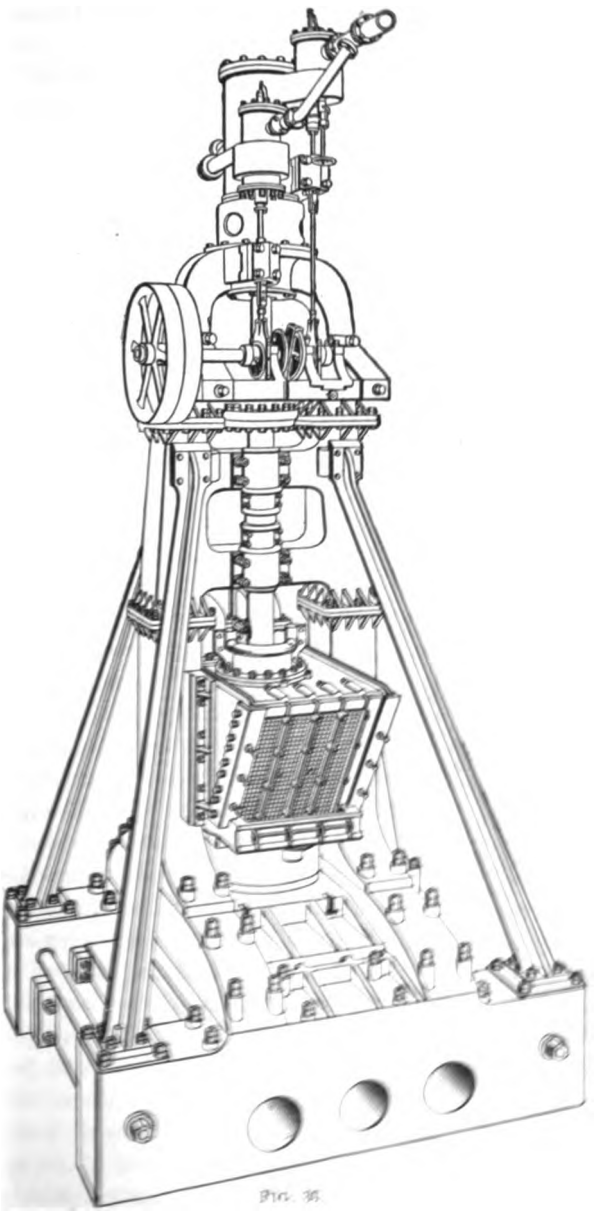

so, it also increases the jar on the frame, and consequently the tendency to crystallize and break.

The crushing capacity of these stamps is enormous, one steam stamp with a 15-inch piston and a 30-inch stroke doing the work of 50 or 60 ordinary gravity stamps. At present the chief use of steam stamps is in milling free copper ores, but they bid fair to be an important factor in gold milling, as these stamps with their heavy blow, strange as it may seem, make less slimes than the ordinary gravity stamps—a great consideration in crushing before concentration.

43. Tremain Steam Stamp.—For prospecting or for small mines where an extensive stamp battery is not required, or where it is simply desired to develop the mine and test its value, the Tremain steam stamp has come into very general use. It consists of two steam-cylinders, which operate two stamps, the heads of which are located in a single mortar, as shown in Fig. 37. In the Tremain steam stamp, the pistons are turned from solid metal on the stamp stems, so that the area exposed to the steam on the up stroke is smaller than the area exposed to the steam on the down stroke by an amount equal to the area of the piston-rod. This area on the up stroke is simply a ring about $\frac{1}{8}$ of an inch wide around the piston-rod. Live steam is employed in raising the pistons, it being introduced on the under side, and, acting on the small area, raises the pistons and stamps, which weigh only about 300 pounds

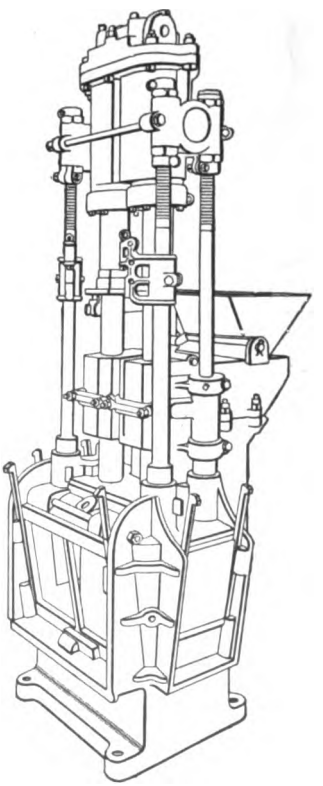

FIG. 37.

each. As one piston ascends, it moves a valve which admits live steam to the bottom of the other piston and *vice versa*, so that the valves of one stamp are operated by the piston of the other in such a manner that the stamps always alternate, one ascending as the other descends. After the steam has raised the stamp, a passage is opened which allows it to expand around, and acting on the greater area of the top of the piston, it urges the stamp down very much more rapidly than it would fall by gravity, so that the blow actually struck is equal to that of an 800 or 1,000 pound stamp. After the steam has urged the piston down, an exhaust-valve is opened and the steam exhausts into the atmosphere as the stamp ascends. On account of the fact that these stamps are operated positively by steam, they can be run at a very much more rapid rate than ordinary gravity stamps, it being possible to use a speed of 200 or more drops per minute for each stamp, and hence the crushing power is very much increased. Some of the advantages of this style of steam stamp are that it is comparatively light and portable and requires no extensive foundation. The stamp can be run by steam from the same boiler which runs the hoisting-engine and mine pump, so that it does away with the necessity of an extra engine or separate motor for operating the stamp-mill. The capacity of a two-stamp steam battery on average ore is greater than that of an ordinary five-stamp gravity battery, and in some cases mines have been operated for a considerable period with Tremain stamps only. In case it is found desirable to move the mill from one location to another, the battery can be taken up and transported with as great ease as either the boiler or engine, and this portable feature is one of the most important factors in the selection of this style of mill. Where the Tremain stamp is used without a crusher, it will be necessary to break up the coarse rock with sledges, but steam stamps can handle much coarser material than the gravity stamps. Owing to the fact that the Tremain stamp, like other steam stamps, produces less fine or slimed material, it is especially applicable for cases in which it is desirable to concentrate ores after they have been passed over the amalgamation plates.

44. Pneumatic Stamps.—The style of stamp usually called by this name is not driven by compressed air, as its name would indicate, but usually consists of two stamps, the stems of which are attached to pistons of small diameter which work in pneumatic cylinders. These cylinders have a reciprocating up and down motion given to them by means of a crank-shaft, with which they are connected by means of ordinary connecting-rods. When one of the cylinders is raised, the air beneath the piston is compressed and so lifts the stem and stamp; similarly, on the downward stroke of the cylinder, the air above the piston is compressed and the stamp driven down more rapidly than it would have descended by gravity alone. The stamps are provided with a means for rotating them, so as to give better or more even wear to the shoes or dies. This style of stamp has been used principally for working the tin ores in Cornwall, and their output is from 20 to 30 tons per head per day, using a 36-mesh screen. The power required is usually about 25 H. P. per head. Like the steam stamps, these pneumatic stamps produce less slime than ordinary gravity stamps.

45. Quick and Slow Drop Batteries.—Stamp batteries for the treatment of gold ores are divided into two general classes, according to the kind of work for which they are intended. For "free-milling" ores, in which the gold occurs native in comparatively good-sized grains, unassociated with pyrites, or "sulphurets," the *California* battery is used. The stamps in this type of machine are very heavy—800 to 1,200 pounds—the average weight being about 950 pounds. They fall through only a short distance, 6 inches being the usual drop. The mortar is built with a low discharge, and in the original form no battery plates (amalgamated copper plates placed inside the mortar) were used, all the gold saved being caught on the apron plates. In most modern batteries of this type, however, an effort is made to save part of the gold in the mortar.

When the discoveries of rich veins of gold-bearing pyrites

were first made in Colorado, batteries of the California type were put to work on the ore. They gave very unsatisfactory results, however, compared with the assay value of the ore, and in the attempt to increase the saving, the millmen evolved the so-called *Gilpin County* battery. The weight of the stamp was gradually cut down and the drop lengthened, and the width and the height of discharge of the mortar were at the same time increased, finally resulting in the typical Gilpin County battery, with stamps averaging about 700 pounds in weight and falling through a height of from 16 to 20 inches into a roomy mortar with a high discharge (12 to 16 inches) and battery plates.

The reason for the change lies in the fact that in gold-bearing pyrites the gold is in a very finely divided form, lying in the cleavage planes of the pyrite. In crushing this ore, a great deal of the gold is set free, but is so fine that it is apt to be floated away without coming in contact with the amalgamated plates. This fact was not known to the early millmen, and at first they put up mills designed to amalgamate all the gold on the apron plates, as they had been accustomed to do in milling free-gold ores, but clean-ups failed to give the proportion of the assay value of the ore that they had anticipated, so they concluded that the gold must be combined very closely with the pyrites, and turned their attention to the concentration of the latter, with little or no attempt at amalgamation. The results were still unsatisfactory; but the true condition of the gold at last became known to them, and to meet it they first put amalgamated plates into the mortar. This was an improvement, but it was found that with quick drop and low discharge, the battery plates were not given time enough to satisfactorily perform their work; so, step by step, the weight of the stamp was diminished and the depth and width of the mortar increased, until the extreme type of high-drop battery was obtained. As is usual in such cases, the changes were carried rather to extremes, and modern batteries are usually a compromise between the two old forms. About 75 per cent. of the total gold saved by

amalgamation is now caught in the battery. The pyrites are concentrated and shipped to the nearest smelter or reduction works for treatment, and in some large mills the tailings are leached by potassium cyanide solution.

ROLLER-MILLS.

46. The term *roller-mills*, as here used, comprises all the modern forms of crushing machinery in which the crushing is done by rollers moving around in a horizontal pan. These machines are all derived from the primitive *Chilian mill* and *trapiche*, in which the crushing is done by heavy stone rollers in a stone pan, the power being furnished by a mule or a water-wheel.

The modern machine of this type is essentially a steel or iron pan with a vertical spindle passing up through the center and bearing two or more radial arms, at the extremities of which are the rollers, of chilled iron or steel. The pan in the path of the rollers is also lined with chilled iron or steel, furnishing a durable crushing face. Crushing is done either wet or dry, and the crushed pulp is discharged through screens in the sides of the pan. As usual, dry crushing necessitates housing the machine.

Roller-mills are of two general types: those in which the axis of the roller is a continuation of the radial arm, and which may, for convenience, be called *radial roller-mills*, and those in which the roller revolves on an independent vertical axis, which may be called *centrifugal roller-mills*.

47. Radial Roller-Mills.—This type is represented by a large number of machines, only a few of which, however, are of any practical value for treating ores. In some machines of this type, the central shaft is stationary and the pan revolves, and in others the pan is revolved in a direction opposite that in which the rollers are moving.

The rollers are usually cylindrical. Moving, as they do, in a circular path, the outer end of each roller has to traverse a longer arc in the same time than points farther in

towards the central spindle, the distance any point traverses being proportional to its distance from the center of revolution. The various points on the surface of a cylindrical roller all revolve at the same velocity about the axis of the roller; and the outer end of a horizontal cylindrical roller revolving about a vertical axis is obliged to slide in order to make up the difference between its linear velocity around its own axis and its velocity around the central, vertical spindle. The inside end, on the other hand, probably drags somewhat, and at only one point along the whole line of contact between the roller and the pan is the motion purely *rolling*. As the idea of the machine is to crush entirely by rolling contact, this is theoretically very bad, but practically it answers very well for all ordinary work, the only serious objection being the uneven wear on the crushing faces. But when it comes to crushing ore to a very fine, uniform size, as for leaching, the difficulty assumes a practical aspect, the amount of sliming due to the slip of the rollers being considerable.

In the **Schranz roller-mill** this difficulty is overcome by making the rollers and pan bottom conical, and having the apex of the cone angle of the rollers correspond with the apex of the cone of the bottom. In this form every point on the roller along the line of contact with the pan moves with the same velocity as the corresponding point on the pan bottom, and consequently without slip. In the Schranz mill the central spindle is stationary and the pan bottom revolves, driving the rollers by friction. Other radial roller-mills use cylindrical rolls with a comparatively narrow face, so that the difference in velocity between the two ends of the roll is very small, and there is consequently little slip.

48. Modern Chilian Mill.—As has been explained in the previous article, the radial roller-mills do not crush the ore primarily, but both crush, triturate, or grind it. There are certain cases in which this triturating action is very desirable, as, for instance, in the preparation of clay

material, and hence most if not all of the clay mills are of the Chilian mill type.

The Chilian mill has always held its place as a means for extracting the precious metals under certain circumstances. In Old Mexico and other locations where rich gold and silver ores occur in regions containing practically no water, it is often necessary to reduce the ore by the patio process, and for this purpose the material is ground in Chilian mills driven by mule power. The mills were originally of the old crude type, but at present the greater number of them are of improved construction, and many of them are similar to that illustrated in Fig. 38, which shows a plan and section of a Chilian mill provided with three rollers. Silver ores intended for pan amalgamation may also be ground or pulverized in Chilian mills, and a large number of millmen prefer this style of machine, even for use with gold ores which are to be amalgamated on plates outside of the machine. They have also been employed for the regrinding of middlings or meals in concentrating works, but are not as well adapted for this purpose as the Huntington

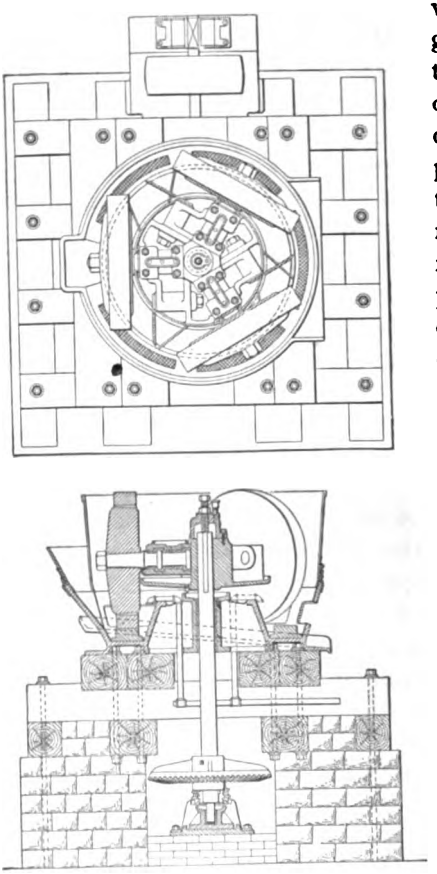

FIG. 38.

mill, which will be described later. The Chilian mill usually has but two crushing rolls or wheels.

49. Centrifugal Roller-Mills.—The second type of roller-mill we call *centrifugal*, because the crushing action is largely due to the centrifugal action of the rollers, which are hung so that they are free to swing outwards in a radial direction, the rapid revolution of the spindle causing the rollers to press against a hardened ring die in the side of the pan, immediately below the discharge screens. These mills are used for wet crushing and amalgamation, also for regrinding the intermediate products in concentration mills. The type is represented by the *Huntington roller-mill*, which will be described in detail, as its success and extensive adoption in gold metallurgy have placed it upon a level with the stamp battery as a crushing and amalgamating machine.

50. Huntington Mill.—The Huntington mill consists of an iron pan, through the center of which passes the vertical shaft *g*, Fig. 39, from which extend arms *a*, *a* bearing a ring *b*, from which are hung the rollers *c*, *c*, swinging freely in a radial direction on the yoke *e*, which is shown in detail in Fig. 40. The rollers are also free to revolve on their own axes. In front of each roller is a scraper *f*, which keeps the ore from packing. The rollers are hung so that they clear the bottom of the pan by about an inch. The central shaft, revolving at a rate of from 45 to 75 revolutions per minute, causes the shoes or rollers to swing outwards against the ring *d*, the pressure varying as the square of the speed of the mill. The crushing power of the mill, being equal to the product of the pressure and the velocity, consequently varies as the cube of the velocity, that is, twice the speed gives eight times the crushing power, etc.

The ore, which has been previously broken to walnut size or smaller, is fed, usually automatically, into the hopper *h* on the side of the pan. The rollers and scrapers throw it out to the rim of the pan, and as fast as it is crushed it passes out

through the discharge screens and trough on to the amalgamated plates. The greater part of the gold, on being liberated from the gangue, sinks to the bottom of the pan, and is caught there by the quicksilver, of which there are

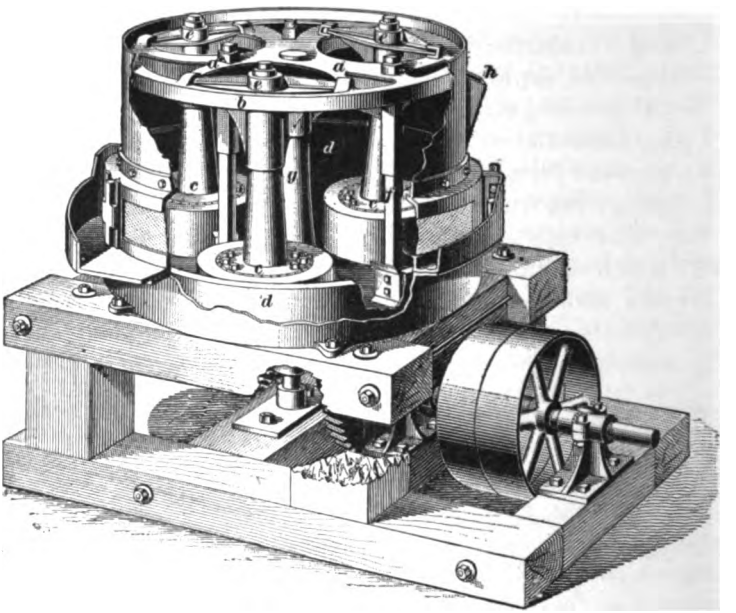

FIG. 89.

from 17 to 25 pounds. The clearance of the rollers prevents their "flouring" the mercury, and at the same time they are close enough to keep the surface of the mercury agitated and in the best possible condition for amalgamating.

This mill is particularly adapted for the treatment of brittle sulphide ores, which under the stamps are apt to slime, causing a heavy loss in the tailings from the concentrating machines.

The mill is made in three sizes, 3½, 5, and 6 feet in diameter, the second being the most commonly used. A 5-foot mill will crush from 10 to 20 tons of rock in 24 hours, through a 30-mesh screen, at an expense of from 10 to 12 horsepower. The first cost of the mill is considerably less than for a stamp-

mill of the same capacity, and while the wear is great, the parts are fairly cheap and easily replaceable. The power per ton of ore crushed is much less than in the stamp-mill, the pulp is in better condition for concentration, and the loss of mercury from flouring is minimized. Its disadvantages are that the wear on the parts is great—particularly on screens, dies, and shoes—and that the corroding action of the acid in some mine water and in decomposing pyritic ores soon renders the machine unfit for use. This latter source of trouble is also present in the stamp battery, but the great thickness of the permanent parts makes it of less moment than in the Huntington mill.

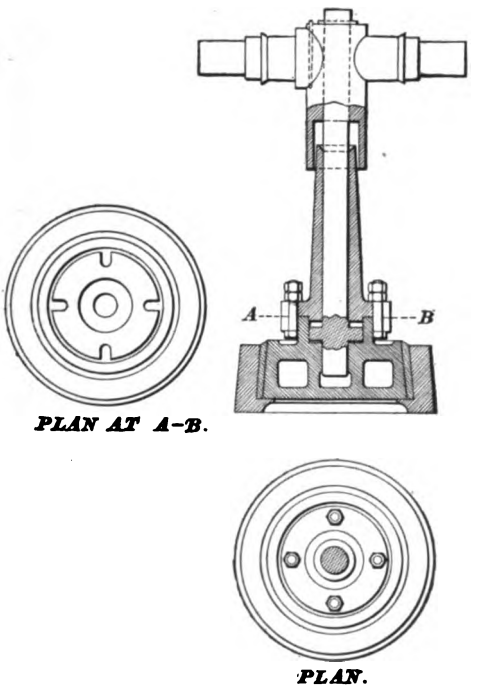

FIG. 40.

Huntington mills have an especial field in the regrinding of intermediate products in concentrating mills.

51. The Kinkead Mill.—This mill is simply a large automatic mortar-and-pestle arrangement. The mill is shown in Fig. 41. The upper portion *a* of the spindle is vertical and revolves in fixed bearings directly over the center of the pan, which is shaped as shown in the figure. The lower portion *b* of the spindle is connected to the lower end of *a* by the offset crank *c*, and slants slightly inwards towards the bottom, where

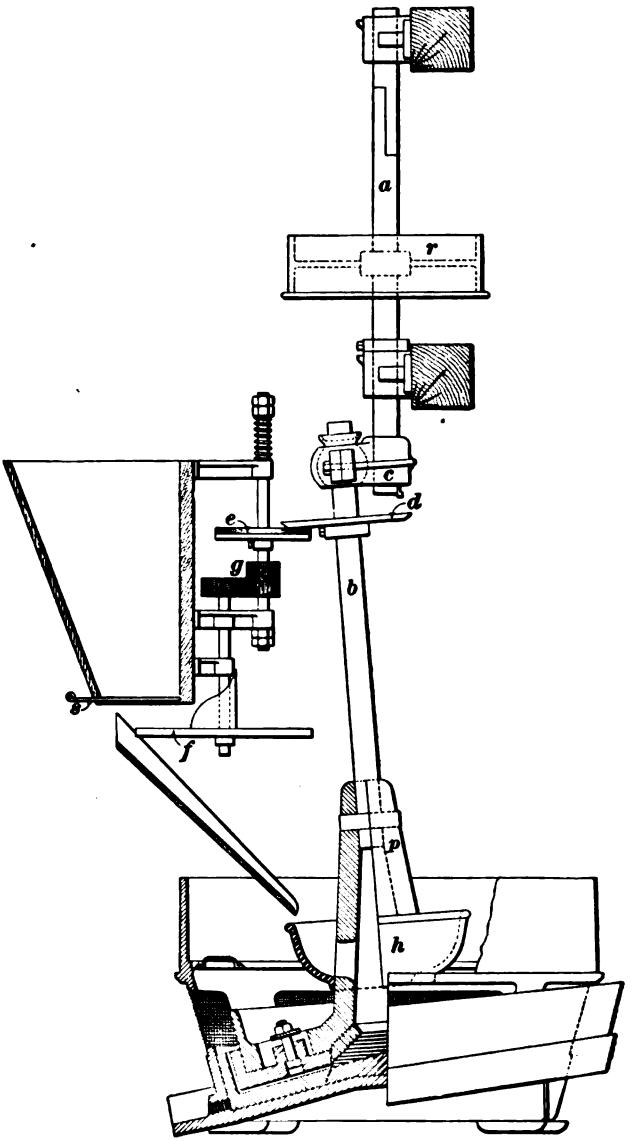

FIG. 41.

it connects with the shoe or pestle *p*. The machine is driven by a belt to the pulley *r*, the offset giving the shoe a gyratory motion. As the ore comes from the crusher, it is charged by the automatic feeder into the hopper *h*. The corrugations shown on the under side of this hopper cause the rock to be rapidly crushed to a small size which can conveniently work down to the rim, where the final pulverization is accomplished. The large screening area allows the pulp to escape as soon as it is sufficiently reduced, and this, together with the fact that the action of the machine is almost entirely a pinching action, reduces the sliming to a minimum. The pulp passes into a discharge launder, which extends all round the mortar and carries all the pulp to the amalgamated plate in front. All crushing parts of the machine are made of crucible steel and are replaceable.

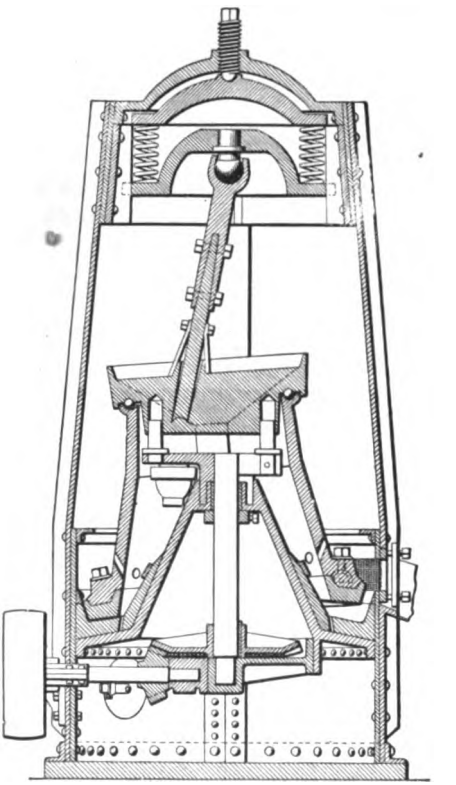

FIG. 42.

The feeding of the machine is entirely automatic. The hopper slide *s* is pulled out to allow the desired amount of ore to fall on to the feed-plate *f*. This plate is connected through the gears *g* to the friction-plate *e*. For a short time, in every revolution of the main spindle, the disk *d* presses on *e* and revolves it slightly around; this motion is

transmitted to *f*, which also turns for a short distance, the ore on the plate being pushed against a sheet-iron guide and a portion of it forced off the plate each time the disk moves. The shaft on which the disk *e* is fastened is hung from a spring, to prevent any excessive pressure between *e* and *d*, which would be apt to break one or the other.

52. A somewhat similar mill has the power applied to the central shaft from below by means of bevel-gears. The motion is transferred to the crushing shoe by an iron disk (see Fig. 42), set eccentrically on the shaft and having on its periphery two loose rollers, which as the shaft revolves are carried along with it, pressing against a ring on the inside of the shoe and causing it to oscillate without revolving.

BALL PULVERIZERS.

53. Ball pulverizers comprise all machines in which the crushing is done by means of balls rolling in a pan or cylinder. For mechanical reasons, the pan form has never been much of a success in practical operations, and will not be discussed. The second form, with the balls moving in a cylinder with a horizontal axis, has several practical representatives. In some of these, a single large ball moving in a grooved path is used; others employ a number of balls, of less size, thrown promiscuously into the cylinder along with the material to be crushed. The best machine of each type will be described.

54. Krupp-Grusonwerk Ball Mill.—This mill is of the multiple-ball type and is used principally for dry grinding. The machine consists essentially of a revolving drum made up of hard-steel plates, inside of which are a large number of chrome-steel balls of various sizes. Outside of this drum are first a perforated sheet-steel cylinder and then a cylindrical sieve, concentric with the crushing drum and revolving with it, and the whole is housed carefully with sheet iron, with an off-take for dust at the top and a discharge funnel at the bottom. The crushing drum is made up of segmental steel plates *a* and *b*, Fig. 43. The plates *a*

are perforated over the front half of their area, and the back portion is thickened and bent spirally, as shown in Fig. 43, causing a slight step between the adjacent ends of segments, the object of which will be seen later.

The ore is fed into the drum through the hopper *h* on the side. Attached to the shaft of the drum at the feed opening are a set of helical spokes *s*, which act as a screw conveyer, feeding the ore gradually into the drum as it revolves, and at the same time rendering it impossible for the balls or the ore to escape back into the hopper. As the ore is broken up by the tumbling balls, it passes through the holes in the plates on to the sheet-iron screen *c*, the holes in which are considerably smaller than those in the drum. Through

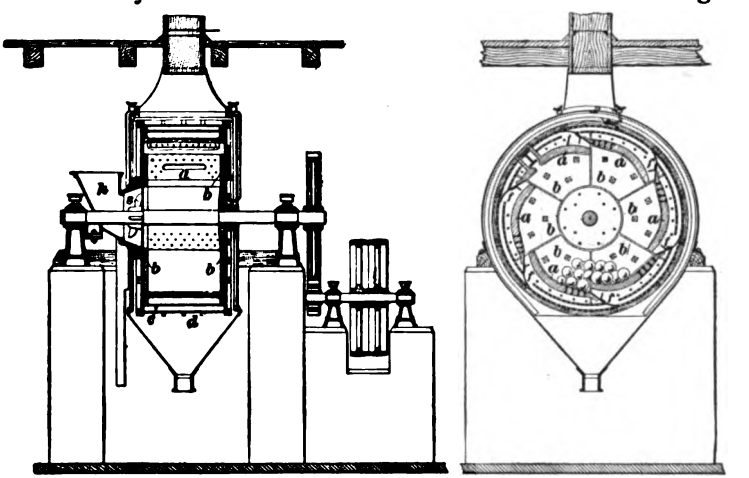

FIG. 43.

these holes the finer stuff passes on to the outside wire screen *d*, and the material too coarse to pass the screen rolls back as the mill revolves on to the plates *f*, *f*, and thence into the drum to be recrushed. These plates, or "shovels," *f*, *f*, are strips of sheet iron extending the full width of the screen and from the front end of each crushing plate, through a slot in the first screen, to the outer, or battery, screen *d*. This slot also allows the return of the coarse material from the battery screen to the drum for further

reduction. The ore which passes *d* finds its exit through the discharge funnel. The mill is run at a speed of from 20 to 45 revolutions per minute, according to the size of the machine. The ordinary sizes of mills are from 53 to 86 inches in diameter.

55. Alsing Pulverizer.—This is another form of multiple-ball machine, used for very fine crushing. It is, in fact, a pulverizer in the true sense of the word. The material is crushed to 10-mesh or finer before being introduced into the pulverizer, and is discharged from it as an impalpable powder.

The machine is automatic and has a continuous discharge. The material is fed in at one end by a screw-feeder *s* (Fig. 44), in a hollow trunnion, and is discharged through the trunnion at the opposite end, the size of the product

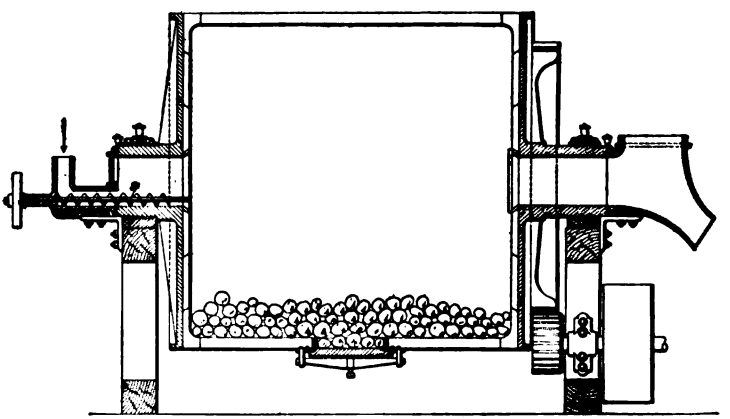

FIG. 44.

being regulated by the rapidity of the feed—the slower the feed, the slower the discharge, and consequently the more complete the pulverization. The cylinder is 8 feet long and 3 to 6 feet in diameter, lined with hard, vitreous porcelain, and makes from 25 to 35 revolutions per minute. A large number of spherical flint pebbles constitute the crushing apparatus. It would seem at first thought that the size of the product could not be uniform, but in practice this mill

has ground 15 tons of ore in 24 hours from 10-mesh, and 99 per cent. of the product passed a 125-mesh screen. The rolling of the machine works the larger particles towards the bottom, so that by the time the ore has traveled the length of the cylinder it is pretty thoroughly crushed. The machine may be used for either wet or dry work.

56. Fraser and Chalmers' Ball Mill.—Fig. 45 illustrates a ball pulverizing mill which has been quite extensively

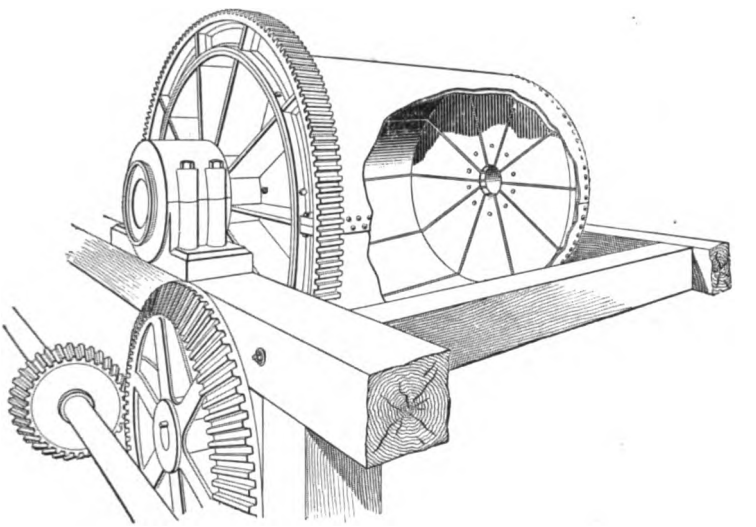

FIG. 45.

employed in preparing ore for cyanide, chlorination, or similar treatment which requires that the ore be pulverized very fine. The ore is first reduced to about four-mesh size, or smaller, after which it is fed to the pulverizing machine, which consists of a sheet-steel shell having cast-iron heads on which are cast trunnions which work in boxes or bearings so as to support the cylinder. One of the heads is provided with a gear for driving or rotating the cylinder. The cylinder is provided with a manhole, which is employed for changing the lining plates. The lining plates are made of chilled iron, the heads being lined with plate in the form of sectors, which are bolted to the head near the center and

secured at the outer end by coming in contact with the linings of the cylindrical portion. The cylindrical portion is lined with curved plates, held in place by means of wooden strips, which are sometimes supplemented by steel wedges driven between them after they are set in position. The shell linings are so arranged that they form a series of ridges which have a slightly spiral course in such a direction as to feed the ore and crushing balls towards the feed end of the cylinder. The material to be crushed is fed into one end of the apparatus through the hollow trunnion and crowds its way to the other end, where the discharge takes place through another hollow trunnion. The rate of discharge is governed by the rate of feeding, on account of the fact that the ore naturally tends to travel towards the feeding end, and travels in the opposite direction only when forced to do so. The balls which accomplish the crushing are about $2\frac{1}{2}$ inches in diameter and weigh approximately $2\frac{1}{2}$ pounds each. They are made of white chilled iron, and it requires about three tons of these balls to charge each crushing barrel. In order to make up for the wear on the balls, it is necessary to occasionally charge new balls in with the ore. The feed end of the machine is provided with some spiral arms which have a propeller shape, and these prevent any material or the balls from crowding back and out through this end. A series of experiments which were carried on to test some of these machines gave the following results: The material fed to the crusher consisted of sixty per cent. four-mesh material, thirty per cent. eight-mesh, and ten per cent. finer than eight-mesh; the product from each barrel amounting to thirty tons in twenty-four hours, the fineness of the product desired being 100-mesh. In pulverizing ore this fine, about fifty per cent. of it was reduced as fine as 150-mesh, and the remaining fifty per cent. varied between 150-mesh and 100-mesh. The wear and tear on the balls amounted to only three pounds per ton of material pulverized. The crushing was done wet and the wear on the balls made up by simply charging the requisite number of new balls into the machine without having to stop it an instant. The speed

of the pulverizing barrel was from 12 to 15 revolutions per minute, and they required from 16 to 18 H. P. for each barrel.

One great advantage that this style of crushing machinery has over all other forms is that no sizing or screening machinery is necessary, for the material to be fed to the crushing barrel is simply crushed through the finishing rolls and the discharge is sufficiently uniform for the purpose for which it is desired. When crushing wet in the above experiments, from five to seven gallons of water per minute were required for each barrel. The crushing may be accomplished

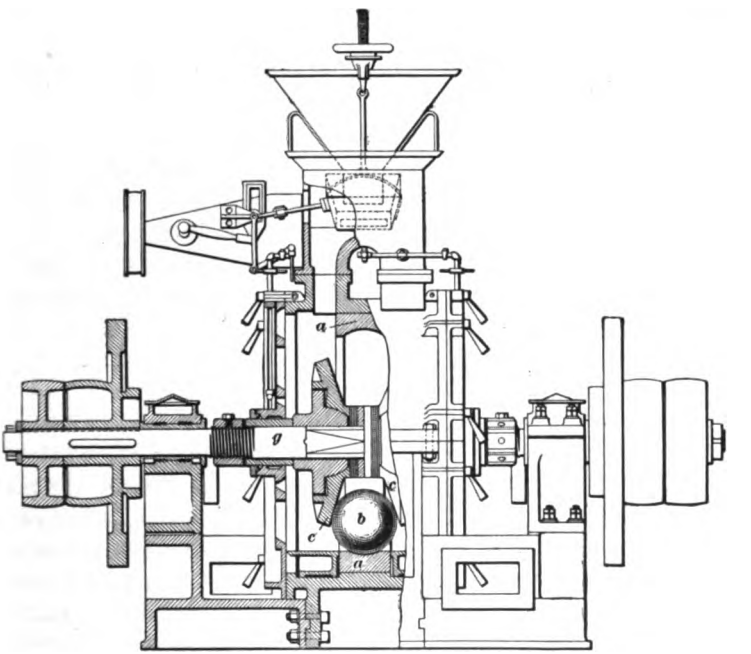

FIG. 46.

dry, and when this is the case the wear on the balls may be increased.

In the illustration the discharge arrangement has been removed from the front end of the machine and a portion of the casing broken away to show the inside of the barrel.

57. Globe Mill.—This mill differs essentially from those previously described, as not only is there but one ball employed (*b*, Fig. 46), but the cylinder *a* is stationary and the ball moves about in it, the motion being imparted by the frictional contact of two steel disks *c*, *c* fastened to the main shaft *g*, flaring slightly away from each other and pressing lightly against the ball. The machine revolves at the rate of about 300 revolutions per minute, giving the ball in a 5-foot mill a velocity of about 75 feet per second, so that after it once gets well in motion, very little friction from the disks is necessary to keep it going, and the wear on the disks is, consequently, surprisingly small. The ore is fed into the machine by an automatic feeder at the top, and falls into the grooved path of the ball *b*, which is pressed strongly outwards by the centrifugal force due to its rapid motion. The crushing action occurs along the whole path of the ball, as its rapid motion draws the ore around with it. The mill is adapted for either wet or dry crushing. The pulp is discharged through screens, which fill both ends of the drum, against sheet-iron splash plates, whence it falls into the discharge boxes and passes out. The wet-crushing mill can be fitted with inside amalgamated plates if desired, and the coarser gold saved inside the mill.

MISCELLANEOUS CRUSHERS.

58. Heberle Mill. — The Heberle mill is a German machine, but is used to some extent in America, principally for regrinding jig tailings. The material is ground between the roughened faces of vertical disks of hardened steel, revolving in the same direction but at different speeds. The mill consists of a large, slowly revolving disk and two small, rapidly revolving disks or runners, set parallel to the large disk and both on the same side and in the lower quadrants of the large disk. The small disks are coned out in the center, leaving an annular grinding face. The large disk is perforated with a series of holes, which, as the plate revolves, pass successively opposite the hollows in the small

disks. The feed launders discharge the material to be ground against the face of the large disk on the opposite side from the grinding face, and as the successive holes come opposite the hollows in the runners, some of the material falls through, and dropping down in the grinding space between the two disks, is quickly reduced by the rapidly revolving plates and drops out through the bottom of the machine.

59. The **Dingey pulverizer** is a machine similar in principle to the Heberle mill, but the grinding disks are horizontal instead of vertical. This is an English machine, and is not used to any extent in America.

60. In the **Cummings mill** the grinding action is practically the same as in the Heberle mill, but there are only two grinding rings; the rings are vertical and of equal size, and one is stationary. The material is fed in through the stationary ring and falls against the disk of the other, which is slightly concave. A rib cast across this disk throws the material into the grinding slit, where it is reduced and discharged by centrifugal force. The mill is designed for dry crushing.

61. Sturtevant Mill.—The Sturtevant mill is a fine-grinding mill, designed to replace fine rolls and stamps. The grinding apparatus consists of two cylindrical cups, on the ends of horizontal shafts, with the openings opposite each other. These cups are from 12 to 20 inches in diameter, and are driven at a very rapid rate—800 to 1,000 revolutions per minute in the 20-inch mill. Both are driven from the same shaft by belts and pulleys. In the larger mills—15 and 20 inch cups—both usually revolve in the same direction; but in the 12-inch mill one of the belts is sometimes crossed, so that the cups revolve in opposite directions. The cups are covered by a chilled-iron screen casing, with a feed opening at the top, beneath the hopper; outside of this casing is a dust-tight, cast-iron casing, with a feed hopper at the top. This hopper is bolted to the

bottom of a large, covered hopper of sheet iron or steel, holding about 4 tons of rock.

The ore is first crushed in a rock-breaker to sizes from 2 to 4½ inches in diameter. It is then fed into the hopper and falls into the mill proper. The centrifugal force due to the rapid revolution of the cups hurls the lumps of ore back and forth between the cups, and the lumps, crashing together, rapidly pulverize one another. The cups are protected from wear by a conical lining of packed ore which forms as soon as the mill is started. This lining packs very hard and completely protects the cups, so that only the edges are worn out, and it assists, moreover, in the operation of the mill, the conical shape causing the ore to fly back and forth between the cups, instead of merely flying to the outside of one cup and staying there, as is the tendency in a cylinder.

The shafts carrying the cups can be moved back in their bearings about 2 feet, bringing the cups well outside of the casing—a very convenient arrangement for making repairs.

The mill has a very large capacity, a 20-inch mill crushing in the neighborhood of 20 tons per hour to 10 mesh—a large portion of this being crushed to 40 and 60 mesh, and finer. They are used only in large works where there are large quantities of ore crushed. It has been adopted to some extent in treating the magnetic iron ores of the Lake Superior region. The mill will work with either damp or dry ore, but the wear is less and the crushing better if the material is perfectly dry.

AUTOMATIC FEEDERS.

62. Automatic feeders for stamp batteries have almost universally replaced hand feeding. When running under uniform conditions with a uniform ore, automatic feeders, once carefully adjusted, will work day in and day out with very little attendance, giving the maximum capacity of the stamps and the minimum wear, besides saving the wages of the feeders.

63. Early Forms.—The first form of automatic feeder was simply a wooden hopper discharging on to a pivoted sheet-iron tray, the front of which was suspended from one arm of a lever, while the other arm extended under the tappet of the middle stamp of the battery and was struck by it just towards the end of its fall, the jar jerking a little of the ore from the front of the tray into the feed slot of the mortar. This machine, the Stanford feeder, was afterwards improved by making the whole feeder—hopper and all—of iron, and making the shaking mechanism a little less crude, though the principle remains the same.

The next departure was to use an endless leather belt beneath the hopper; this belt was advanced a little at each revolution of the battery cam shaft by a pawl-and-ratchet arrangement, the lever being lifted after each stroke by a spring.

Another of the early feeders had a drum beneath the hopper, and in the surface of the drum there was a series of longitudinal semicircular grooves, each of which in turn discharged its contents of ore into the mortar as the drum was slowly revolved by the dropping of the stamps.

64. Roller Feeder.—Another and more modern form of roller feeder is shown in Fig. 47. The roller, like that in the previous machine, revolves a little with each drop of the driving stamp, and carries out with it a little ore each time. The feed from this machine is apt to be irregular, as the roller may slip without bringing out any ore, and large pieces may clog the machine. The feeder is, moreover,

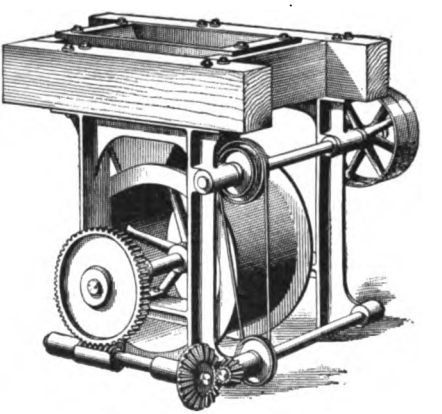

FIG. 47.

suitable only for dry ore, as damp ore will stick to the roller.

All the early feeders, with the exception of the grooved-roller feeder, fed more or less irregularly, and were for this reason not very reliable, and, moreover, they worked well only with dry ores. The modern feeders cut out a certain amount of ore at each stroke and push it off into the mortar, making the feed perfectly regular.

65. Tulloch Feeder.—The Tulloch feeder, shown in Fig. 48, is probably the most used of the modern feeders, as it feeds perfectly and is cheap, light, and very simple in

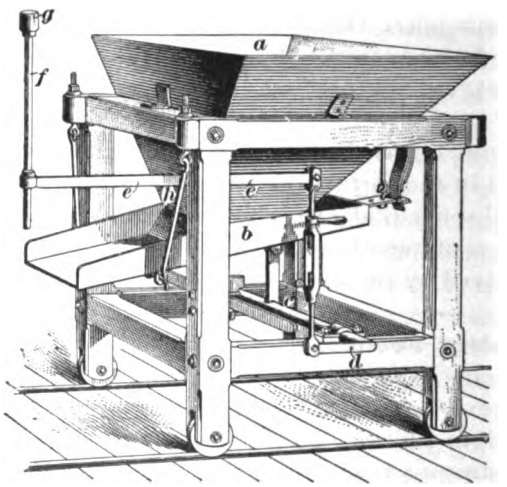

FIG. 48.

construction and operation—any blacksmith can make whatever repairs may be necessary. The feeder is of the shaking-tray type. The hopper *a* holds about 1,500 pounds of ore, which runs into it directly from the crusher or is dumped in from a car.

The tray *b* is hung from the frame timbers in such a manner that it swings forwards of its own weight until lugs beneath strike the jar rod. It is swung backwards by an arm on the rocker-shaft *c*, connected to the under side of the tray. The crank arm *d* of the rocker-shaft is connected

with the short arm of the lever *e*, the long arm of which is connected with the tappet-rod *f*. This tappet-rod is a rod of 1-inch steel, parallel to the middle stamp stem and passing through a hole bored through the lower guides. The head of the rod, upon which is set a rubber buffer *g*, is struck by the stamp tappet towards the end of its fall, and pressing down the lever *e*, throws the tray back. Some of the ore in the tray in front of the door *h* is pushed off, the amount corresponding to the length of the swing of the table, while the tray, falling back into position again as soon as the tappet-rod is released by the raising of the stamp, carries forwards an equal amount of ore from the inside of the hopper. A spring is sometimes used at the back of the tray to assist the forward motion, but is unnecessary. The frame of the feeder is mounted on rollers, so that the machine can be readily moved about. The feed regulates itself automatically; if the bed of ore on the dies gets too thick, the lowest position of the stamp is raised in consequence, shortening the length of the stroke of the tappet-rod, and consequently diminishing the feed of the machine, until the bed has worked down again. If the bed gets too thin, on the other hand, the feed of the machine increases correspondingly.

66. Challenge Feeder.—The Challenge feeder, shown in Fig. 49, is particularly adapted for very wet and sticky ore, on account of the fact that the ore is scraped off in place of being shaken off. It is heavier and more expensive than the Tulloch, and much more intricate in construction, but is very strong and durable and feeds well. The hopper feeds on to the inclined cast-iron plate or disk *a*, Fig. 49, which is revolved by a bevel-gear beneath, driven by a friction disk *f*—or, in a modification of the Challenge, by a ratchet-and-pawl arrangement—which is connected by a system of levers to a tappet-rod, as in the Tulloch feeder, and turns a short distance with each blow on the rod. The friction disk (or pawls) and the levers and tappet-rod are brought back into position after each blow by a flat steel

spring *s* and link *l*. With each partial revolution of the plate, the wing *b* scrapes off a little ore into the machine being fed. The highest position of the tappet-rod is con-

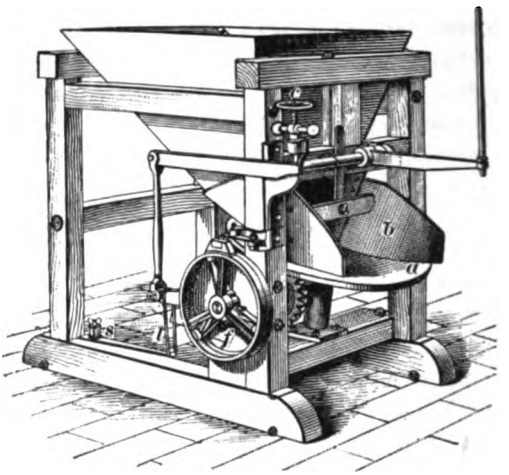

Fig. 49.

trolled by the hand-wheel *c*, while the length of its stroke varies with the length of the drop of the stamp, which in turn depends on the thickness of the bed of ore on the dies, so that the feed, as in the Tulloch feeder, is self-regulating.

67. Automatic feeders were formerly driven by the blow of one of the outside stamps, either No. 1 or No. 5, but the feed was found to distribute better if the blow was given by the middle stamp, No. 3; and all feeders are now built with the tappet-rod opposite the middle of the machine, under the middle stamp, unless otherwise ordered. The old "right" and "left" feeders are still found in many mills, however.

Both the Tulloch and the Challenge feeders can be adapted to feeding Huntington or other roller-mills, the levers being operated by cams on belt-driven shafts instead of by tappet-rods. The feed from the belt-driven feeders is not self-regulating, however, and must be very carefully adjusted.

SIZING AND CLASSIFYING MACHINERY.

68. The ore as it comes from the crushing machines ranges in size from impalpable dust to the largest pieces which can pass the machine. In all processes of treatment except smelting, uniformity in the size of the product submitted to the process of extraction is sought, as such ore makes a uniform, open bed, through which the leaching gas or solution and the wash water percolate evenly, so that the extraction is regular and complete throughout the whole mass. For this reason, screens or other sizing apparatus are placed between the crushing machines and the apparatus for the further treatment of the ore; the ore which passes the screens goes on to the leaching vats or tanks, while the coarse ore passes through another crushing machine, or else goes back into the original machine to be further reduced. If, on the other hand, the entire product of a crushing machine, as a set of rolls, for instance, were conveyed directly to a leaching vat, the bed would probably be very uneven, clogging in some places, from excess of fines, and at others being too open; and the leaching agent would merely travel up and down through these open spaces and never get fairly into the clogged spot, so that their values would be practically untouched. And even if this did not occur and the ore bedded well and percolated evenly, nevertheless, since the time of extraction is the time required for the solution to thoroughly penetrate the coarsest particles, the operation would be unduly prolonged. By screening the crushed ore and recrushing the coarse particles, the maximum size of the product can be reduced as much as desired without affecting the minimum—the practical limit of this recrushing being the point where the cost of recrushing balances the gain in time and extraction. This point varies with different ores, and can be determined only by experiment.

In preparing ores for concentration, also, a certain amount of sizing is necessary; for, while the fundamental principle of all concentration is that the minerals of higher specific

gravity will sink to the bottom, and those of lower specific gravity will range themselves above in inverse order of their specific gravities, yet there are complications which enter into and modify this hypothesis somewhat. All concentrators of any merit use water in their operation. Now, while of two minerals of different specific gravities, which are broken up into particles of a uniform size, the heavier will readily arrange itself in a layer below the lighter, nevertheless, if they be of varying sizes, they will have a tendency to arrange themselves not only according to their specific gravities, but also according to the *law of equal falling particles.* This law is *that bodies falling free, in a fluid, fall at a speed proportional to the weight divided by the resistance.* Now, the weight of a body is proportional to the volume, and hence increases much more rapidly than the resistance, which is made up of three separate forces: namely, the frictional resistance of the fluid, which is proportional to the total lateral surface exposed; the vertical reaction (floating force) of the fluid, which is equal to the weight of the fluid displaced; and the cohesive force of the water, which must be overcome in order that the body shall sink. Now, if a lot of unsized ore is thrown into water, the particles will sink with a speed proportional to their weight divided by the resistance of the water. This will result in a bed of mixed ore at the bottom; the lower portion of this bed will be made up mostly of the coarser particles of the heavier mineral, but mingled with these we will find many coarse fragments of gangue rock, and mineral not wholly freed from gangue. These latter particles will be larger than the pure mineral particles, but the proportion between their weight and the resistance they met in falling will be the same as in the case of the pure mineral lying at the same level. This arrangement will continue up through the bed, the proportion of gangue, however, becoming greater as we ascend, and the top layer consisting almost entirely of fine gangue. The reaction is known as **hydraulic classification.**

In most apparatus the fall is too short to allow of com-

plete separation of the equal-falling classes, and the fall is further retarded by the friction of the particles upon one another, but the law, nevertheless, enters indisputably into the action of all concentrators. Indeed, these unfavorable conditions for concentration make it doubly desirable that the sizing should be uniform, in order that the separation shall be as complete as possible; for, incomplete as is the concentration according to this law, it is still a step in the right direction, and the more uniform the ore, the longer the step; until, were perfect uniformity of product possible in crushing, we might expect a practically perfect separation of the minerals by water alone, the only drawback being that it is impossible to entirely disengage the mineral from the gangue. In actual practice, this incomplete separation gives rise to a product known as "middlings," or unseparated ore and gangue, which in such a bed as the one mentioned above will occupy a position intermediate between the pure mineral "headings" and the pure gangue "tailings."

SIZING MACHINERY.

SCREENS.

69. The sizing apparatus most commonly used, and, in fact, the only *purely* sizing apparatus, is the screen in its various forms. For stamp, ball, and roller mills the screens are a part of the mill, and, with the exception of mills of the Grusonwerk type, in which the screens revolve with the rest of the mill about a horizontal axis, are stationary, and vertical or only slightly inclined.

70. Drum Screens or Trommels.—In the case of jaw crushers, rolls, and gyratory crushers, there is not enough splash to prevent the material from packing on a stationary screen, and it becomes necessary to give the screen motion. The most common way of doing this is by winding the screen cloth on a cylindrical or polygonal frame, Fig. 50, which revolves slowly on axes slightly

inclined from the horizontal, and running the ore from the crusher into this revolving drum. The inclination of the drum allows the coarse material, which will not pass the meshes of the screen, to run down to the lower end, where it runs into a chute *a*, and is either returned by a belt or chain elevator to the original crushing machine, or — as is usual in large mills — is carried to a finer crusher. The screened product is carried on by means of a hopper and a trough *b* to the apparatus for further treatment, or, as is frequently the case, to a second, and sometimes third and fourth, screen, each of somewhat smaller mesh than its predecessor. This limits the variation in the size of the product from any particular drum to the difference between the diameter of its meshes and of those of the preceding drum. Such multiple screening is resorted to only when several distinct sizes of product are desired, or, in fine crushing by successive stages, to lessen the duty and increase the effectiveness of each crushing machine.

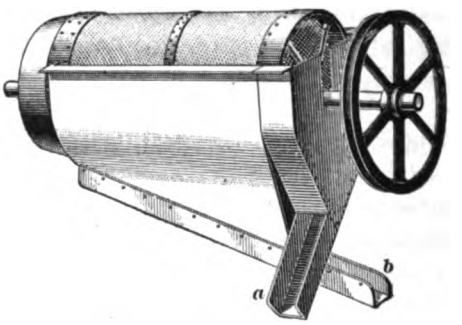

FIG. 50.

Drum screens are sometimes set with their axes horizontal, doing away with end thrust in the bearings, the slope necessary for the discharge of screenings being obtained by making the frame conical or pyramidal, with the discharge at the wide end.

71. Variable-Mesh Screens.—To save the room and expense of a multiple-screen system, various schemes have been devised for crowding the entire series of screens on to a single frame. The simplest of these is to divide the drum into sections, each of which is covered by a screen of different mesh, making practically a series of separate screens

upon a common axis, the fine screen being at the head and the coarse screen at the mouth of the drum. The large receiving hopper is divided into sections corresponding to the divisions of the drum, with delivery pipes from each section. This scheme is open to the objections that, if more than two sizes of screen are desired, the drum must be made inconveniently long or the screens will not have time to do their work fully, and that the most wear falls on the finest screen.

A better scheme is to arrange the screens in a series of concentric drums, each with a separate discharge trough for its screenings. In this arrangement the coarse screen is in the center, next to the shaft, and the meshes of each consecutive screen become smaller towards the outside. Conical screens of this type are sometimes made with every other cone reversed, so that adjacent screens discharge at opposite ends of the drum. In this case, as in simple conical screens, the axis is horizontal.

72. Shaking Screens or Box Screens.—Shaking screens are but little used in ore dressing, the simple construction of drum screens, together with their economy of space and admirable working qualities, having led them to supersede all other forms for automatic sizing. Shaking screens are practical, however, and are still used to some extent in coal screening. A reciprocating motion is given the screen by means of an eccentric or by a cam and springs. The mechanism in either case is much more intricate than that of a drum screen to accomplish the same work, and the shaking screen occupies considerable more space. Moreover, drum screens are frequently hung from overhead timbers, leaving the floor beneath clear for any purpose desired, while shaking-screen frames are usually set on the floor, taking up room at the expense of other machinery or the convenience of the workmen. The greatest objection to shaking screens in concentrating works is that they have such a jarring effect upon the building, and the average concentrating mill has enough jarring without

introducing any more. The capacity of shaking screens is greater for equal areas of surface than the capacity of revolving screens.

73. Wet and Dry Screening.—Screening, like all other work about a mill, is preferably done wet whenever consistent with the further treatment of the ore, as the water facilitates the operation, lessens the wear on the screen, and renders housing unnecessary. Jets of water are sometimes played on the screen to prevent clogging, when there is not sufficient water in the pulp as it comes from the crushing machine.

74. Screen Cloths.—The materials used for covering screen frames are, as in the case of stamp-battery screens, punched sheet metal and woven-wire cloth. Both materials may be used for all sizes of product, but as a rule the sheet-metal screen is better adapted for coarse material, while wire screens work best on the fine stuff, as their open area per square inch is greater for the same size of mesh. For wet crushing, wire screens can be made of brass wire, which does not rust out. The relative values of different varieties of screen vary with the character of the ore. In fact, the relative merits of punched-metal and wire-cloth screens are still a subject of dispute, but a review of the experiments upon which each side of the controversy bases its arguments goes to support the statement given above.

The round-hole screen is the commonest form for punched sheet-metal screens, and after it the longitudinal, oval, or rectangular slot. Square holes and diagonal slots are also common. Wire screens are almost invariably made with the meshes set square with the frame.

75. Grizzlies.—As the ore comes into the mill, it is dumped on to stationary inclined gratings, or "grizzlies," Fig. 51, made up of flat steel bars, set edgewise, usually 1½ or 2 inches apart, and running lengthwise down the grating. As the ore slides down the grizzly, which is inclined at an angle of from 45 to 55 degrees in the direction

of its length, the ore which is already small enough to pass between the bars of the grizzly falls through into the ore bin below, while the coarse stuff slides down on to the feed floor of the rock-breaker, which reduces it to the proper size and then discharges it into the ore bins, where it mixes with the under size from the grizzly.

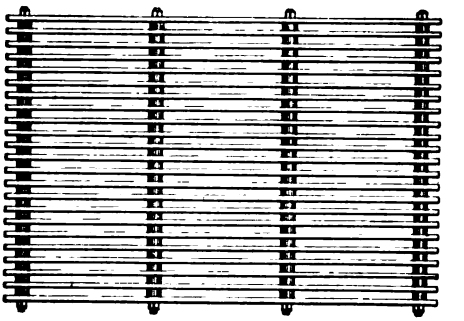

FIG. 51.

The grizzlies vary from 3 to 6 feet in width and from 8 to 12 feet in length, 4 ft. × 10 ft. being the usual size. The bars are held in position by round iron rods, usually three in number, one in the middle and one near each end; they are spaced by cast-iron washers, through which the rods pass. The bars are sometimes made with the lower edge thinner than the upper, the idea being to have the openings slightly wider at the bottom than at the top, and thus prevent ore sticking in the grizzly.

CLASSIFYING MACHINERY.

76. Screens of very fine mesh can not very well be used for automatic work around a mill, as they are expensive, delicate, and altogether too slow in their action. Now, in the operation of any crushing machine, however coarse the maximum or average size of the product may be, there are produced a considerable proportion of "fines," the proportion increasing rapidly as the crushing faces of the machine are brought closer together. These "fines" are made up of particles varying in size from fine sand to an impalpable dust or slime. In character they are, like the original ore, a mixture, more or less intimate, of gangue and mineral;

the only difference is that the more brittle portion of the ore (usually the mineral portion) is present in larger proportion, as its brittleness tends to make it break up fine, while the tougher gangue material stays in larger lumps. This makes it doubly desirable that these fines should be saved. In the early days of mining in this country, the fines were allowed to go to waste. Later, a rough concentration was attempted by means of bumping tables. The success of these was followed by the introduction of other and more elaborate sand and slime concentrators. Most of these machines depend for their operation upon the tenacity with which the various minerals of an ore cling to a smooth surface against the force of a current of water. The machines were at first fed with the screen-sized material direct from the stamps, but this resulted in too wide a range of product from the concentrator, while the saving was not what it should have been; so that at present a classifying apparatus is usually interposed between the battery screen and the concentrators, *assorting the material into equal falling classes*, and each class is carried to a separate concentrator. The duty of each concentrator is thus lightened, and the separation made much cleaner; for not only is the range of size of material to be treated by any one machine thus decreased, but the heavy, pure mineral in each class is confined entirely to the smaller particles, and the pure gangue to the larger, with the combined mineral and gangue ranged in between in sizes relative to the proportions of mineral and gangue present. The smaller particles present much less surface to the water, in proportion to their weight, than the larger particles, and consequently tend to cling more tenaciously to the surface of the concentrator, and by regulating the current we can keep any proportion of the material we desire from washing away. This sorting is accomplished by the use of *hydraulic classifiers*.

77. Spitzkasten.—Spitzkasten, Fig. 52, are evolved from the old "labyrinth," which was a series of troughs or trenches, with settling pits at intervals, in which the various

classes of material settled; these pits were allowed to fill up with sediment and were then cleaned. Spitzkasten are boxes with pointed or pyramidal bottoms. They are arranged in series, each box discharging into one somewhat larger than itself. As the pulp stream flows through the series, each class settles out as it comes to a certain box,

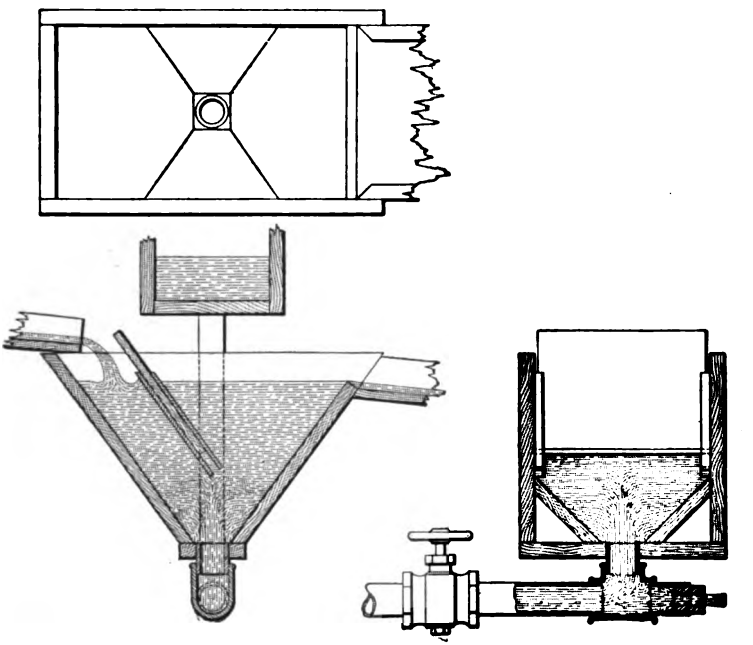

FIG. 52.

according to the strength of the current at that point. In the old type of machine, each class discharges continuously and automatically through a siphon discharge in the apex of the inverted pyramid constituting the bottom of the box, similar to the discharge shown in Fig. 53. This siphon reduces the force of discharge, which it is desirable to keep as low as practicable, and permits a larger discharge opening, thus obviating to a great extent the danger of clogging. For this reason the finer material, requiring less force to carry it, is discharged through a longer siphon (at a higher

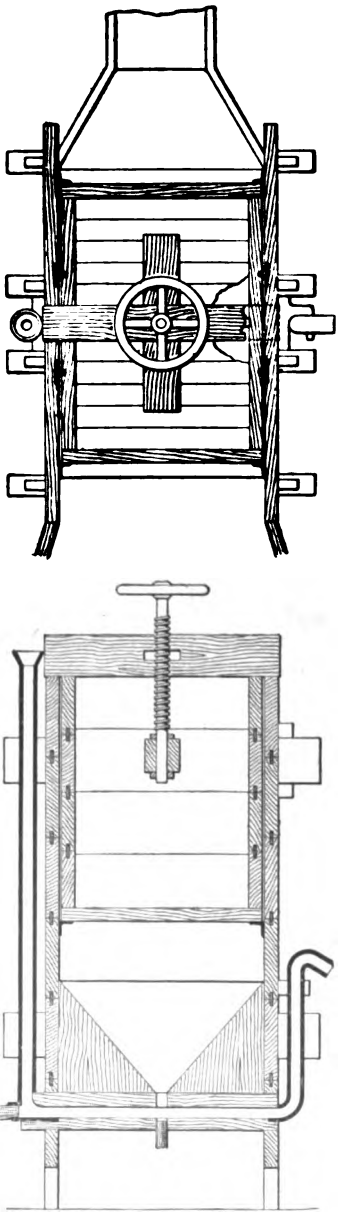

FIG. 53.

level) than the coarser sands, the discharging pressure or head being equal to the difference in height between the surface of the water in the box and the mouth of the siphon.

In all modern machines of this type, the siphon discharge is dispensed with, and the separation made cleaner by introducing a rising current of water at the bottom of the box, as shown in Fig. 52; the material settles against this current into the tee below and is washed out at the orifice. In this way all slimes are washed out, and the concentrates are very clean. A partition or "diving board" is set in the box to divide it into a downward and upward current and prevent surface currents from traveling directly across the box.

The level of the water in the trough from which the wash water is taken is somewhat higher than that in the boxes, giving the desired pressure for an upward current, and the force and amount can be regulated by valves in the pipes, as shown. The first boxes of the series are usually quite small, and

the current of the pulp stream as it passes through is correspondingly swift; so that only the heaviest ore particles settle out in the first box. As the size of the boxes increases, the force of the current diminishes, and the finer pulp settles out, the size of the material settling in each box becoming successively smaller as we go down the series.

78. Spitzlutten.—Spitzlutten are similar in operation to spitzkasten. Instead of being pyramidal, however, the spitzlutte is a V-shaped box (Fig. 53), inside of which is set another V of the same slope, with a space between the two bottoms varying in size with the work to be done. The inner box is usually made separate from the main box, with an adjusting screw, as shown in the figure, so that the opening may be varied as desired. The main current with the pulp flows down one arm of the V and up the other, the particles of ore which possess sufficient weight sinking back against the rising current, while the lighter particles are carried on. The bottom of the apparatus below the spitzlutte proper is made pyramidal, to facilitate the discharge of the concentrates. A siphon discharge is used, like that in the figure, or the discharge is like the one shown in Fig. 52. An auxiliary upward current of wash water is now used in all these machines, as in all other modern classifiers.

79. Allis Classifier.—The Allis classifier shown in perspective and section in Figs. 54 and 55, respectively, is a modification of the spitzlutte. Referring to the section, Fig. 55, the pulp flows through the trough and screen as indicated by the arrows. The partition *a* divides the machine into two main divisions, corresponding to the down-flowing and up-flowing arms of the spitzlutte. The up-flowing arm, which extends under the main box like the tail of a *y*, is divided by partitions *b*, *c*, and *d* parallel to *a*—there being as many of these partitions as there are to be classes of products formed. The wash water enters through a pipe at the side of the box into a compartment behind the classifying trough proper, and passes down and under the partition *p*, through

a space left for this purpose, and rises on the other side. The pulp flows through the trough and screen down one arm of the machine and up the other, as in the spitzlutte. The lighter particles of gangue are carried up with the ascending stream through the space between *a* and *b* into the tailings box. A metal lip at the top of *a* extending over the top of the tailings slot prevents the overflow from the receiving trough or down-flowing arm from running back

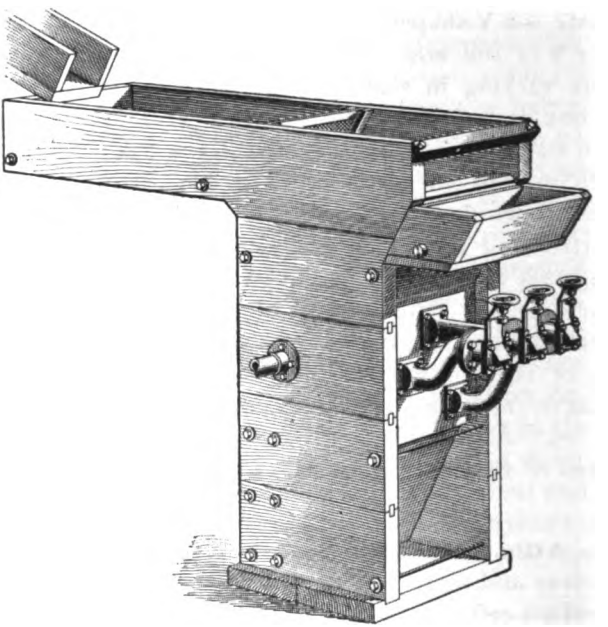

FIG. 54.

down the tailings slot in case the machine gets too full. The heavier mineral particles settle to different depths, according to their densities, before they are carried up into their respective spouts, the wash current growing stronger as they descend. The tops of the discharge spouts are all on the same level, or nearly so, so that all classes are discharged with the same force. The tongues shown at the ends of the partitions regulate the size and amount of each class, or the partitions may be made with slides which are

adjustable to different depths by rods with thumb-screws attached, running up through the tailings trough.

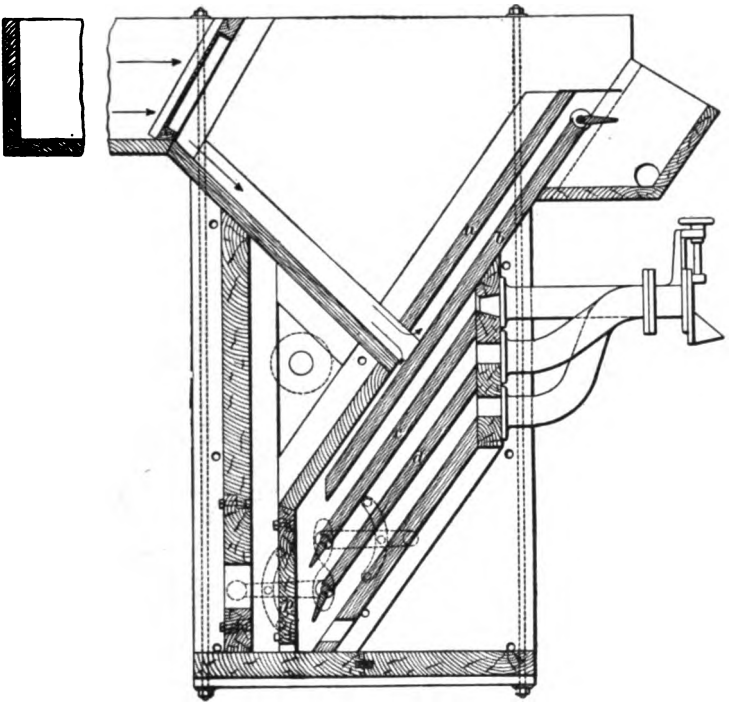

FIG. 55.

80. Cone Classifier.—The cone classifier is a modification of the spitzkasten and spitzlutten classifiers. The apparatus, which is shown in Fig. 56, is made entirely of iron. The outside cone is of cast iron; the inside cone, usually made of boiler iron, is open at the bottom and can be adjusted, like the inner box of the spitzlutte, by means of a hand-wheel and screw. The construction is shown at (*a*). The pulp flows into the inner cone and down through the open bottom; here it meets a rising current of wash water and flows up through the space between the two cones. The particles of minerals have to settle against the combined upward force of the wash water and the rising pulp

stream. Those particles which have weight enough to do this settle to the bottom and are discharged through pipes on to their respective concentrators, while the lighter particles are carried over with the main pulp stream into the launder and thence into the next larger classifier, where the whole operation is repeated, but with a slower current, on account of the greater size of the apparatus, the average size of the product being proportionately smaller. By vary-

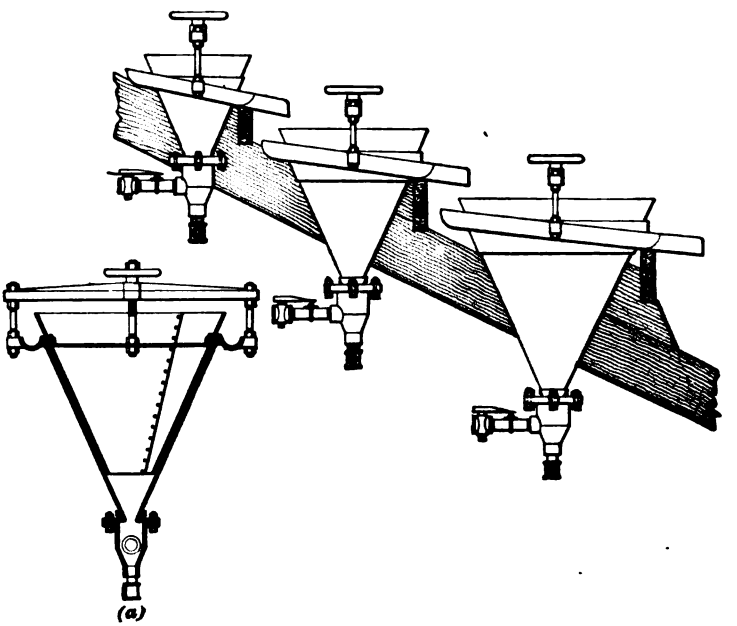

FIG. 56.

ing the width of the space between the cones and the amount of wash water, the separation may be made as close as desired, and may be carried through any number of machines —more than three, however, being unusual. These machines have largely replaced the old-style wooden classifiers in American mills, as they are much more convenient and compact. The cone classifiers are made in sizes ranging from 12 to 40 inches in diameter and from 100 to 625 pounds in weight.

81. Trough Classifiers.—In the Lake Superior copper regions, classifiers of another form, known as trough separators or classifiers, are used for a rough classification of the native copper ores, preliminary to jigging. Two styles are used. Fig. 57 shows the *Lake Superior trough separator*. It is merely a double V trough, the space between the inner and outer troughs being divided at intervals, as shown, making the apparatus in effect a series of double V boxes. Towards the lower end of each box a slot is cut in the bottom of the inner trough to allow communication between the two. The pulp is run in through the inner trough in a continuous stream, while the outer trough contains the wash water, which is kept at a level somewhat higher than that of the pulp in the inner trough, in order to maintain a steady upward current of wash water through the slots, against

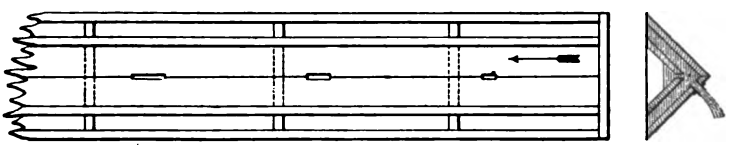

FIG. 57.

which current the mineral must settle. The coarser particles naturally settle to the bottom first and sink through the slots into the outer trough, and thence through the discharge openings to the jigs, the finer stuff being carried farther along before settling. The slots grow longer towards the lower end of the trough, so that the smaller particles shall have more time in which to find their way through into the lower trough.

82. The *Calumet classifier*, shown in Fig. 58, is another trough classifier, of an entirely different type. It consists of a series of boxes or pockets in the bottom of a trough which widens slightly towards the lower end. The pulp flows through the entire series, the stops *s*, *s* deflecting the stream downwards into the bottoms of the boxes, so that all the material is subjected to the action of the wash water. The wash water enters through the pipe *a* and discharges

directly against the discharge spigot *d*; the latter, however, is not large enough to carry it all off directly, and it swirls and eddies in the bottom of the box, keeping the sand stirred up, and only the heavier particles, which have weight enough to settle against this turmoil, are washed out through the discharge spigot. The shield *c* deflects the currents set up by the wash water and prevents them from rising to the surface, thus confining the agitation to the bottom. The force of the wash water can be regulated at will, the classes issuing from the spigot responding readily to any change in

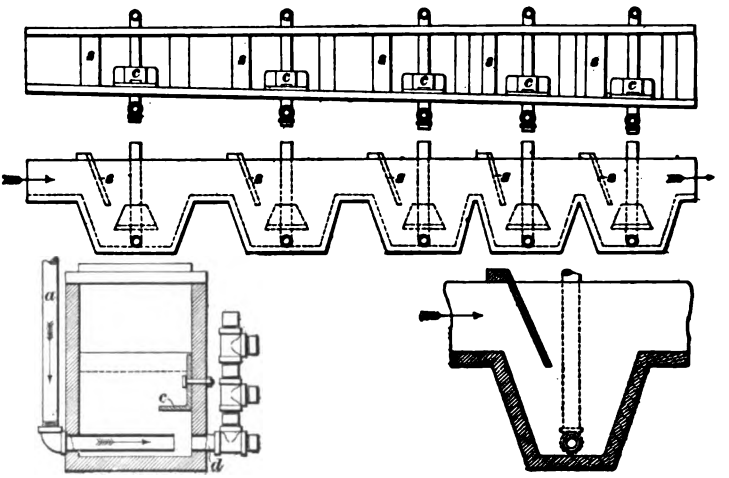

FIG. 58.

the force of the wash water. The force of the wash water in the lower boxes is less than in the upper, and the average size of the product proportionately smaller. By using for the discharge spout a vertical pipe with three or four openings at different levels, the amount of water discharged may be regulated—the discharge being more rapid when the lowest hole is used and slowest when only the top hole is open.

83. Hydraulic classifiers are, as a matter of fact, concentrators, but are treated under a separate head because they are invariably used in preparing ores for further

concentration. The jig, on the other hand, is just as essentially a classifier in its action as the hydraulic classifiers just described, but the classes which it yields are treated as final concentrates; hence the machine is always classed with concentrators.

SETTLING BOXES.

84. It is always desirable, if possible, to crush and size ore with a large excess of water, as this greatly facilitates both operations. This excess of water is, however, frequently undesirable, or at least unnecessary, in the subsequent treatment of the ore. If a too thin pulp interferes with the subsequent operations—as is the case with many concentrators of the vanner type, or in the pan amalgamation of silver ores—the battery pulp is run into settling boxes, where the suspended material settles out and is withdrawn at the bottom with just sufficient water to give it the proper consistency for concentration or amalgamation, as the case may be. The concentrates from some machines are delivered with a great deal of water, and are usually settled out and drawn off very thick, to be dried for further treatment, storage, or shipment. Tailings from concentrating and amalgamating mills are likewise sometimes settled out and dried, and then treated by the cyanide process for what gold remains in them.

In case of a scanty water-supply—quite a common drawback to milling operations—the necessity for dry crushing may be avoided by drawing off the superfluous water from the pulp and tailings and using it over and over again. The adoption of this scheme has allowed the working of many large deposits which would otherwise have remained untouched.

85. The settling of pulp is a very old practice. It was formerly done in large settling pits sunk in the ground, through which the pulp stream flowed. The sediment was allowed to accumulate until it came so near the surface of the water that the surface currents commenced to cut

gutters in the deposit, when the pulp stream was deflected into another pit and the sediment in the first pit shoveled out. The pits were usually rectangular, with steep, sloping sides. The large settling tank or vat replaced the settling pit. The tank is a huge rectangular pointed box, set on a framework above the ground, and working in exactly the same manner as the pit, the only advantage being in standing above ground. These boxes or tanks are sometimes set in series, beginning with tanks only a few feet long and wide, and ending in tanks of enormous dimensions, somewhat on the plan of spitzkasten, but on a much larger scale. The larger the tank, the greater the diminution in the velocity of the pulp stream on flowing into it; consequently, the boxes arranged in series in this way would be in effect classifiers as well as settlers, the heavier and coarser equal-falling particles settling out in the smaller boxes, while the finer and lighter particles would remain in suspension until they reached the almost motionless bodies of water in the larger tanks.

86. Besides the trouble of hand cleaning, which necessitates either the construction of two tanks or sets of tanks, to be worked alternately, or else the shutting down of the mill while the tanks are being cleaned out, the old settling tank, as well as the more primitive pit, presents several other disadvantages. Their size and consequent cost is one great drawback. In addition to this, a great deal of fine material is floated across by surface currents, and when the deposit of sediment approaches the surface, more or less of it is washed over the lower edge of the box. The continuous, automatic-discharge settling box removes all these objectionable features at a single stroke. The size of the box is reduced to reasonable proportions, surface currents are prevented by the use of a diving board, and the operation of the machine is continuous, the sediment being removed as fast as formed, and not being allowed to accumulate in the box.

The construction of the settling box is illustrated in Fig. 59.

A box of the dimensions given in the figure will handle the pulp from five stamps, or even ten under favorable conditions. The sides should slope at least 50 degrees from the horizontal, or the sediment will stick to them instead of sinking to the bottom and discharging. The pulp is fed in through a distributor at the head, with holes and guide tongues, and the clean water discharges over the lower edge—which is cut 2 or 3 inches lower than the sides for

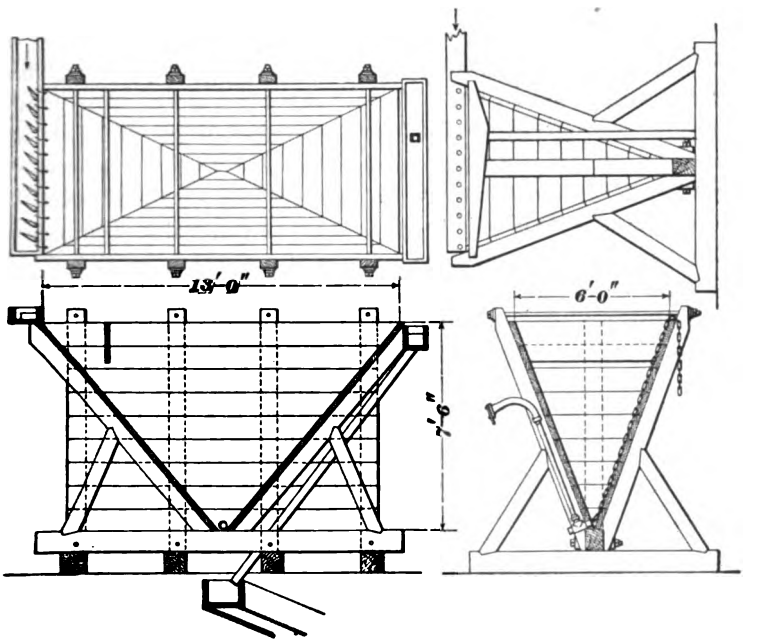

FIG. 59.

this purpose—into a trough, and thence into the water launder.

All the pulp must pass under a vertical diving board across the tank near the head, and this serves the purpose of preventing surface currents; that is, it prevents the pulp stream from running right across the tank and over the other end in a narrow current between banks of quiet water, instead of spreading equally over the whole box. This diving board

also serves the purpose of completely submerging the particles of ore, thus preventing their being floated off on the surface of the water, supported by a film of air—the source of considerable loss in milling. The sediment discharges through a 1½ or 2 inch siphon discharge, a few inches above the bottom of the box. The upper portion, or, better still, the whole, of the discharge-pipe is of rubber hose, and the pressure of discharge can be altered by simply raising or lowering the mouth of the hose, which is closed by a sliding-gate tap. The pipe is connected to the box by a nipple and tee, or, if a hose be used for the full length of the pipe, the tee can be dispensed with, as the only reason for using it is that an opening may be had at the bottom of the box so that it can be completely emptied if desired, and with a hose discharge-pipe this can be had by merely dropping the hose.

The form of the settling box has considerable influence on the size of the box required. If the location is such that the number of square feet is limited, it will be found better to employ a wide short box than to employ a long narrow box, on account of the fact that the relative percentage of the materials settling from the water depends upon the degree to which the velocity of the current is retarded, or, in other words, the nearer the flow is brought to rest, the more thorough will be the settling of the contents. If two boxes can be employed, it is usually better to divide the flow and send half of it through each box than to place the two boxes one after the other and depend on each of them to extract a portion of the material from the flow.

CONCENTRATING MACHINERY.

87. Concentrators is the general name applied to all machines for concentrating the mineral values of an ore into a smaller bulk, in order to get rid of as much superfluous material as practicable and thus reduce freight and treatment charges. Among the Western smelters it is customary to vary the smelting charge with the character of

the ore as regards fluxing, or, what is practically the same thing, to have a uniform charge for a neutral ore (one in which iron oxide and silica are present in the same proportion), and then pay a fixed premium for every additional unit (per cent.) of iron, or require a bonus or excess charge on every unit of silica beyond neutrality. For instance, if a mine at a considerable distance from any smelter is producing a quartz ore carrying 10 per cent. iron pyrites—the other 90 per cent. being quartz—and $12 per ton in gold, the owner would be apt to find, if he shipped the ore direct, that, after paying the freight and the smelting charges, including the bonus on the silica, there would be little left of his $12. But the quartz being much lighter than the pyrite, he finds that, after crushing, he can, by the use of suitable apparatus, wash away the greater part of the gangue rock, leaving behind the pyrites, in which all the values are contained. In this way he dispenses with a great portion of his freight charges, and if he carries the concentration far enough, he may, instead of paying a bonus on excess silica, receive a premium on excess iron. There is always more or less loss of mineral in concentrating, but by the careful use of good apparatus this can be kept down to a nominal figure. The limit to which concentration may be profitably carried is the point beyond which the cost of concentration, together with the inevitable loss of values in the tailings, exceeds the saving in freight and the treatment charges.

88. Concentrating apparatus may be divided into two general classes: First, machines in which the separation is performed by means of an intermittent upward current of water, which tends to arrange the particles in layers, in the order of their specific gravities. This class comprises all jigging apparatus. Second, machines in which the separation is mainly due to the superior tenacity with which the particles of the heavier mineral cling to a smooth surface against the force of a stream of water. This class includes buddles, and belt and table concentrators and vanners.

JIGS.

89. Jigs are almost universally used for concentrating the coarser sizes of ore, but are inefficient for ore below 30 mesh, that is, ore which will pass through a screen having 30 openings to the linear inch, or 900 holes per square inch, ores below this size being usually concentrated on bumping tables, vanners, or buddles, or other slime concentrators, according to the fineness.

All jigs work upon the same principle, that is, the tendency of the particles of a bed of ore in water, when approximately of the same size, to arrange themselves in layers, according to their specific gravity, when the bed is kept sufficiently open to allow the particles to move freely among themselves. This is accomplished in all jigs, either by giving the column of water a pulsating motion, or, by what is practically the same thing, giving the grating and screen upon which the bed lies a short reciprocating motion, the resistance of the water lifting up the bed on the down stroke of the piston or grating and the particles assorting themselves as they settle back. The pulsating motion of the water makes the operation of the machine continuous, as the particles of a certain density are never allowed to get below a certain level; for, so long as the bed is properly preserved there will always be a layer of heavy mineral upon the screen, which it will be impossible for the lighter mineral to displace, so that the latter is confined entirely to a level above the bed of heavy mineral, though the particles of heavy mineral may work down through it, a little at each stroke, to the bed below. In jigging coarse material, the holes in the screen upon which the bed rests are made smaller than the ore to be jigged, and the latter forms its own bed as described, the different classes being discharged through various forms of pipe and slide discharges above the screen. Material has been successfully jigged in this way as coarse as 2½ inches in diameter and as fine as 10 mesh. For jigging the smaller sizes, however, it is customary to have the meshes of the screen rather larger than the particles of ore

to be jigged, so that the whole surface of the screen may be utilized for discharging the concentrates. A bed 1 to 4 inches thick, of coarse mineral, of the same or slightly greater specific gravity than the mineral to be concentrated, is arranged directly above the screen. This bed is usually made up of coarse pieces of the same mineral as that to be concentrated. The fragments composing the bed are all too large to pass through the screen. Through this bed the fragments of the mineral to be concentrated work their way, and passing through the screen, fall into the hutch, or hopper-shaped box, below, where they accumulate and are discharged at intervals. This method is used very largely in American gold milling, where sizes seldom run above ½ or ¾ inch.

90. Crushing can never completely disengage the ore from the gangue, nor can screening or even hydraulic sizing be made so close that there will not be a considerable variation in the size of the particles making up any one class; so that in jigging it is practically impossible to get a perfectly clean separation of ore and gangue. Even among the cleanest concentrates there is always some gangue and ore combined, and also in the cleanest tailings; and in all concentration, by jigging or otherwise, there is always an intermediate product between concentrates and tailings, known as "middlings," which is made up of combined gangue and ore. In jigging, these middlings form a bed or stratum between the clean concentrates and the tailings—or, in the case of jigging through a bed of coarse material, just above this bed—which is discharged separately. If practicable, the middlings are usually recrushed and returned to a finer jig to be further concentrated.

STATIONARY-SCREEN JIGS.

91. The ordinary type of jig belongs to the class in which the grating supporting the screen is stationary. In construction all jigs of this type are essentially the same. The machine consists of a rectangular box or tank, divided, for the upper part of its depth, into two compartments by

a vertical partition. A space is left open below this partition to allow free passage for the water between the two compartments. In one compartment is a stationary grating *g*, Fig. 60, of wooden bars, supporting a wire screen upon

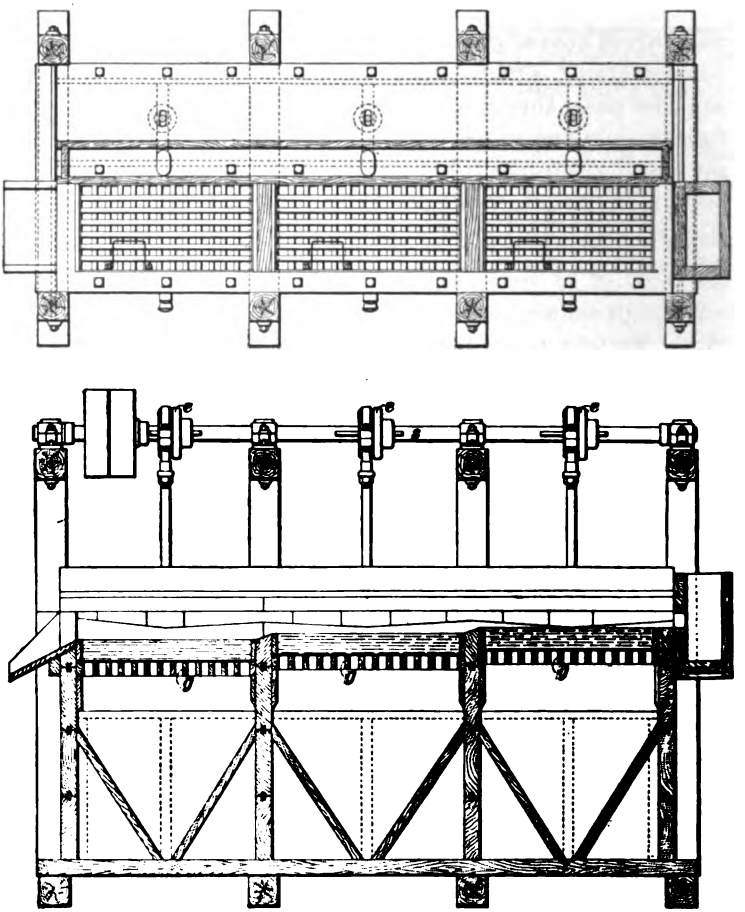

FIG. 60.

which the ore is bedded; in the other is a piston or plunger, which is moved, usually up and down, as in Fig. 60, but sometimes horizontally, as in Fig. 61, by a crank, eccentric, or other reciprocating device on the shaft *s*. The horizontal-

plunger jig is not very extensively used, as it presents no decided advantages over the vertical-plunger type, requires more floor space, and it is hard to keep the packing about the piston-rod water-tight. Jig plungers are made to fit

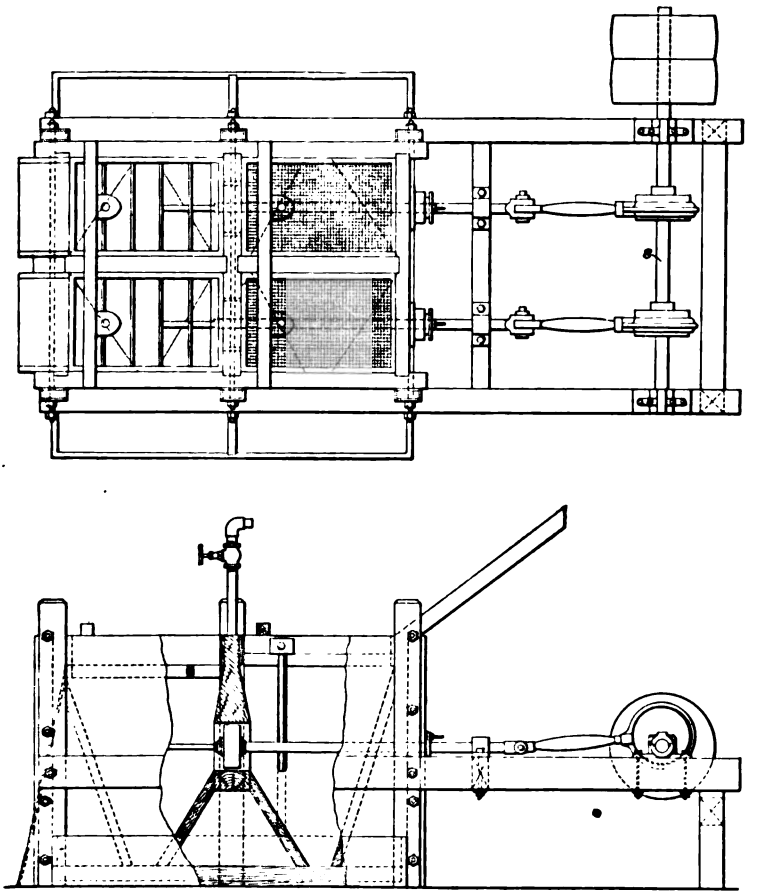

FIG. 61.

loosely, and in the vertical-plunger type of jig are sometimes also perforated with auger-holes, in order to reduce the suction on the back stroke.

In starting a jig, the bed is first arranged on the screen

as nearly as possible in the order the particles would arrange themselves under the action of a jig in operation; water is then run into the tank until the ore bed is completely covered, when the piston is started up, giving the water column a quick, dancing motion, which keeps the bed open and assists in the separation of the classes. Ore and water are fed in, either together or separately, at a rate to keep pace with the discharge of the machine and make its operation continuous. If they are fed separately, the ore is fed in at the head of the machine, on to the screen, and the water is fed into the piston compartment; otherwise both are fed on to the screen. The bottom of the tank is made hopper-shaped, with a hole and plug or a discharge gate for removing the concentrates. The middlings were formerly allowed to accumulate, and were cleaned off at intervals by hand, but in most modern jigs they are discharged through automatic, continuous-discharge gates, which are described farther on. The tailings discharge over one end of the box, left lower than the other for that purpose.

92. Jigs are frequently made in sets of two, three, or four, or what are known as two, three, or four compartment jigs, one long tank being partitioned off into that many main compartments. Each one of the latter is further subdivided into screen and plunger compartments. The grating and the tailings dam of each successive main compartment are somewhat lower than those of the preceding compartment, so that the overflow and tailings from each compartment are carried on into the next and further concentrated. These multiple-screen jigs are used when several grades of product are desired, or when the ore contains more than two minerals which it is desired to separate from one another more or less completely. For instance, if an ore contains galena and pyrite, with a quartz gangue, a three-compartment jig would be used. The concentrates from the first compartment would be galena, almost pure; from the second, mixed galena and pyrites; and from the last compartment, nearly pure pyrites. If the gangue is a heavy one, like

baryta, or there is another mineral in the ore which it was desired to separate, as zinc-blende, another compartment would be added, the concentrates from which in the latter case would be mixed blende and pyrites, with some gangue, particularly if the latter is heavy. The separation of three minerals may also be accomplished in a two-sieve jig, the mixed galena and pyrite forming a middlings class in the first compartment, above the bed of heavy, coarse mineral, while the concentrates from the second compartment are nearly pure pyrites.

The force of the water column in the different compartments is regulated by varying the length of the stroke of the piston. The plungers, in jigs of less than four compartments, are all operated from one shaft; in four-compartment jigs two shafts are generally used, with two pistons on each, the shaft for the last two compartments revolving somewhat more rapidly than that for the first two. It is in the method of varying the length of stroke of the pistons on a common shaft, independently of each other, that the chief difference between the jigs of this type lies.

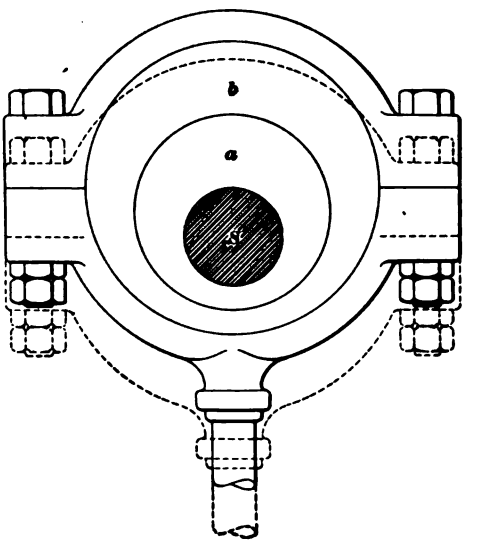

FIG. 62.

93. Hartz Jig. —The Hartz jig is the commonest form of jig, and is typical of the vertical-plunger class. Fig. 60 shows a three-compartment Hartz jig. The stroke of the piston is regulated by means of a double eccentric *e*, made up of two eccentrics, one within the other. Fig. 62 shows the construction and principle of

the eccentric. The inner eccentric *a* is fixed on the shaft *S*, usually ½ inch out of center. The outer eccentric *b* is set the same amount out of center with reference to *a*, about which it may be turned, being held in position while in operation by set-screws. When *b* is turned so as to carry its center on the outside of the center of *a*, opposite the shaft center, the total throw of the whole eccentric *e* is equal to the sum of the throws of *a* and *b*. Thus, with *a* and *b* each ½ inch out of center, *e* would be 1 inch out of center, with a consequent throw of 2 inches. But if *b* be turned half way round *a* from this position, so that the center falls

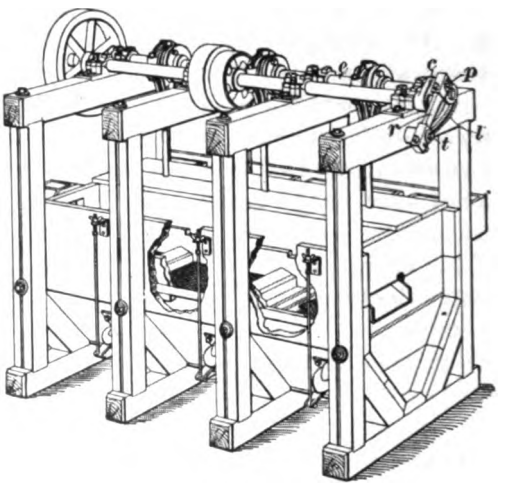

FIG. 63.

on the same side of the center of *a* as the shaft center, the center of *b* will coincide with the shaft center—each being the same distance from the center of *a* and on the same side—and the throw of *e* will consequently be reduced to zero, as shown by the broken lines in the figure. By turning *b* to any desired position between these two extremes, the throw can be varied from 0 to 2 inches.

94. Quick-Return Hartz Jig.—In the ordinary Hartz jig, the up and down stroke require the same length of time, and consequently on high-speed jigs the suction on

the back stroke is considerable. But by the use of a countershaft and the arrangement of crank, lever, and connecting-rod shown in Fig. 63, the down stroke of the piston is made to occupy only one-third of the time of the full double stroke—or one-third of one revolution of the countershaft—the other two-thirds being consumed on the up stroke. The diagram, Fig. 64, shows how this is accomplished.

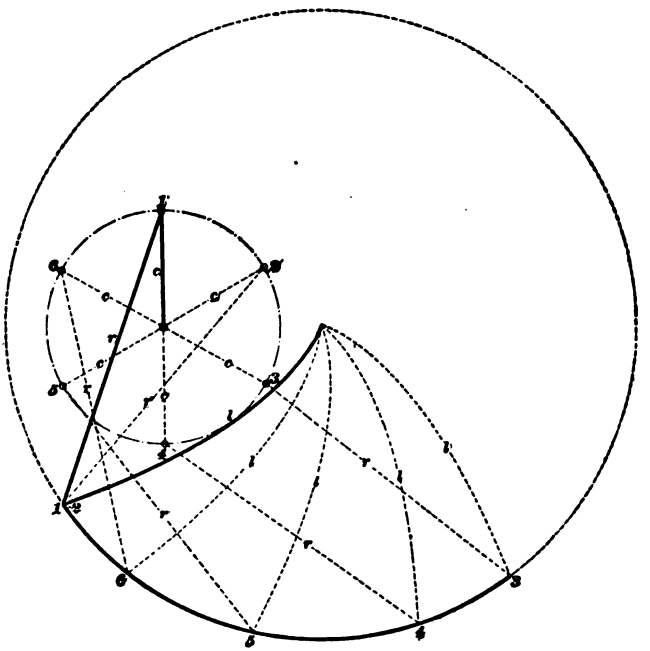

FIG. 64.

The small circle is the path of the crank-pin p in the crank c, Fig. 63, and the large circle represents the path that would be described by the pin t in the end of the lever l in one complete revolution of the rocker-shaft e. The connecting-rod r, being fixed at one end to the crank and at the other to the lever, must necessarily, in any position it can possibly take, have one end somewhere on the circumference of each of these circles. The lengths of c, r, and l being known and the paths to which the connecting pins on

c and *l* are confined being fixed, by assuming *p* at any point of the circumference of the smaller circle, and laying off the length *r* from this point to the circumference of the larger circle, we obtain the corresponding position of the connecting pin on the lever *l*. On the diagram, the corresponding points on the two circles are numbered alike. It will be noted that the lever travels on the down stroke between its two extreme positions, indicated by the points *1* and *3* on the circumference of the larger circle, while the crank moves between the corresponding positions on the smaller circle, and that the latter distance is only one-third of the circumference of the circle. The return stroke of the piston occupies the other two-thirds of the revolution of the crank-shaft. (While *p* travels from *1* to *2* in this particular instance, *t* remains nearly motionless, and points *1* and *2* on the larger circle exactly coincide, so that the down stroke of the piston really occupies only one-sixth of a revolution of the crank-shaft.) This device is used only on high-speed jigs with a short stroke, as the eccentric moves only through a quarter of a revolution, and in order to get a long stroke, the eccentric would have to be of quite large diameter and considerably out of center. A similar scheme is also applied to other types of jigs using cranks instead of eccentrics on the countershaft.

95. Slide Jigs.—The slide jig shown in Fig. 65 illustrates another adjustable reciprocating device. In principle it is somewhat similar to the quick-return Hartz jig, the down stroke occupying a shorter portion of the revolution of the shaft *s* than the up stroke. The lever *l* is slotted and keyed on the rocker-shaft. In the slot of *l* is a freely moving block *b*, which also serves as a bearing for the free end of a crank-pin *p* extending out from the wrist-plate *d*. As the shaft *s* revolves, the block *b* slides back and forth in the lever slot, and at the same time causes the lever to oscillate, this motion being transferred to the rocker-shaft, and from here through the crank to the piston.

The two extreme positions of the lever *l* are the points

where the center line of the lever is tangent to the circle described by the center of the pin *p* in its revolution about the shaft *s*, as shown by the dotted lines in Fig. 65. It is apparent that the larger the circle described by the pin, the greater will be the difference between the duration of the up stroke and the down stroke. Consequently, in order to make this difference adjustable, as well as the length of the stroke, the pin *p* and wrist-plate *d* are so constructed that the distance between the centers of the pin *p* and the shaft *s*

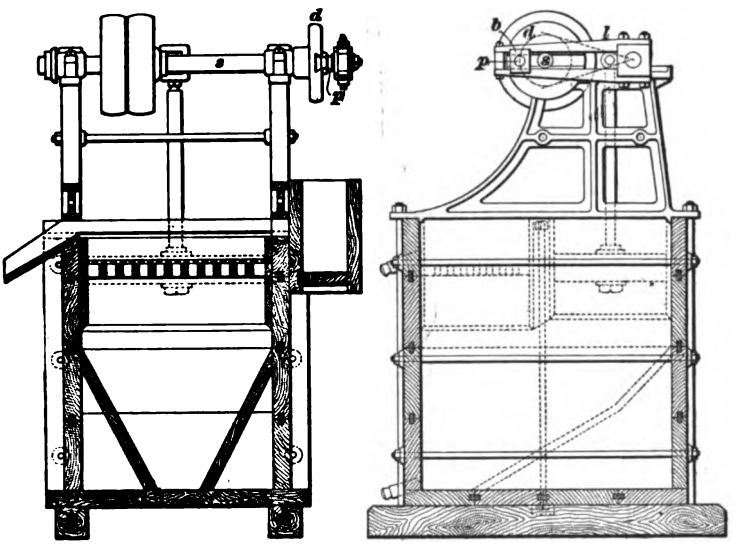

FIG. 65.

can be varied at will. The plate *d* is slotted diametrically across its face, and in this slot *p* slips and is held in place by a nut. If *p* is moved over to the center of the plate, the pin will merely revolve in the block *b*, without any up or down movement, and the lever and rocker-shaft will remain stationary. But if the pin is moved ever so little away from the center of the plate, it will have some throw and will start rocking the lever and rocker-shaft. As the distance of the pin from the center of the plate increases, the throw of the lever increases also, and consequently the length of

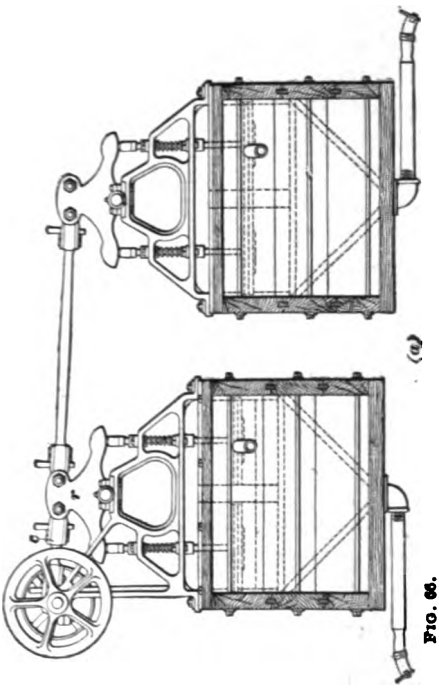

FIG. 66.

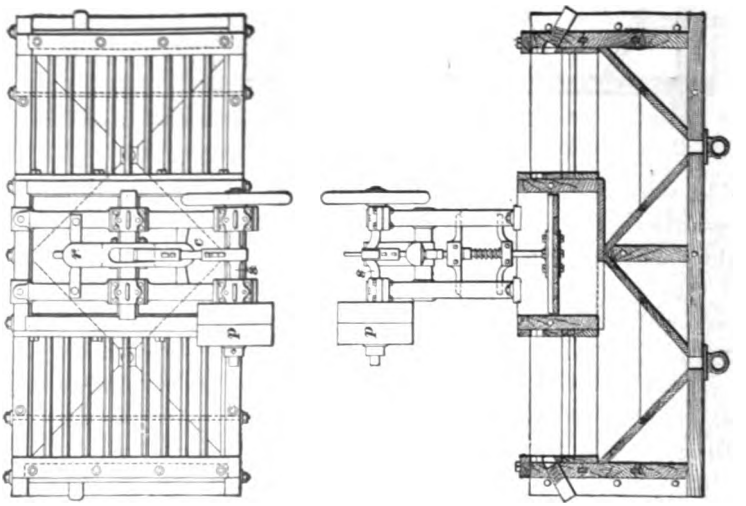

the piston stroke, while the duration of the down stroke is decreased as the angle through which the lever moves increases. These jigs are suitable for coarse ores.

96. Collom Jig.—The Collom jig, shown in Fig. 66, illustrates another method of operating the pistons. In this method the pistons are not connected with the shaft, but are hung independently and held in position by springs and collars, as shown in the figure. The pulley *p* is set on a crank-shaft *s*, from which a connecting-rod *c* runs to the lever tappet *r*, giving the latter a rocking motion. As the tappet oscillates, the levers press alternately on the heads of the piston-rods on either side of the shaft, the rods pressing down as the arms descend, while the springs return them to their normal position as the arms rise and release them. The length of the stroke may be varied by raising or lowering the set collar on the piston-rod, against which the spring presses, thus lowering or raising, respectively, the normal position of the piston. As the lowest position of the piston is always the same, being the point to which it is depressed when the lever arm is in its lowest position, while the highest position is the normal position in which it is held by the spring alone, it is obvious that by raising or lowering the latter, the stroke is consequently increased or diminished, respectively, the motion of the lever tappet being entirely independent of that of the pistons. Two jigs of this type are sometimes operated from one driving shaft, as shown in Fig. 66 (*a*), by means of a connecting-rod between the two lever tappets; the motion is thus transmitted from the driving, or head, jig to the following, or tail, jig. The tail jig in this case is set at a slightly lower level than the head jig. Collom jigs are quite largely used for the concentration of copper ores.

97. Pneumatic Jig. — The Krom pneumatic jig, shown in Figs. 67 and 68, is essentially a dry concentrator, the gangue being separated from the ore by means of rapid puffs of air up through the ore bed. No water at all is used, and the ore must be perfectly dry. The ore bed *o*,

Fig. 67, is only about 5 inches wide and extends the full length of the machine. The thickness of the bed is regulated by the height of the tailings-discharge dam *a*, which extends along the front the entire length of the bed, as shown in Fig. 68. The feed is regulated by a similar vertical gate *b* in front of the opening of the hopper *h*, extending, like *a*, the full length of the machine.

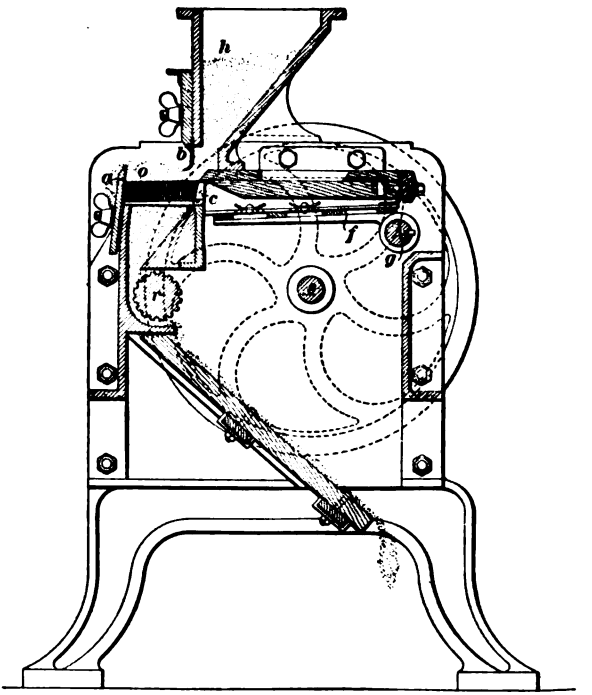

FIG. 67.

The sieve compartment is connected with the fan chamber by a narrow vertical slit *c*, Fig. 67, extending the full length of the bed. The sieve is made up of inverted troughs of wire gauze, open at the end next to *c*. These troughs are placed from $\frac{3}{16}$ to $\frac{3}{8}$ of an inch apart, according to the size of the ore to be jigged.

The fan *f* is a flat, horizontal vane, extending the full length and width of the fan box. There are several flap-

valves in it that open on the down stroke, preventing suction and reducing the resistance. It is keyed to a rocker-shaft *g* in the back, upper angle of the box, and this shaft is operated by a lever *l*, Fig. 68. A projecting roller tappet on the lever is held by a spring *d* against a ratchet-wheel *t* on the end of the driving shaft *s*. As the driving shaft revolves, the lever is forced back until the roller passes the ratchet-tooth, when the spring draws the lever sharply back into position, throwing the fan upwards. A strap *e* checks the lever from striking the wheel on the in stroke. The trip

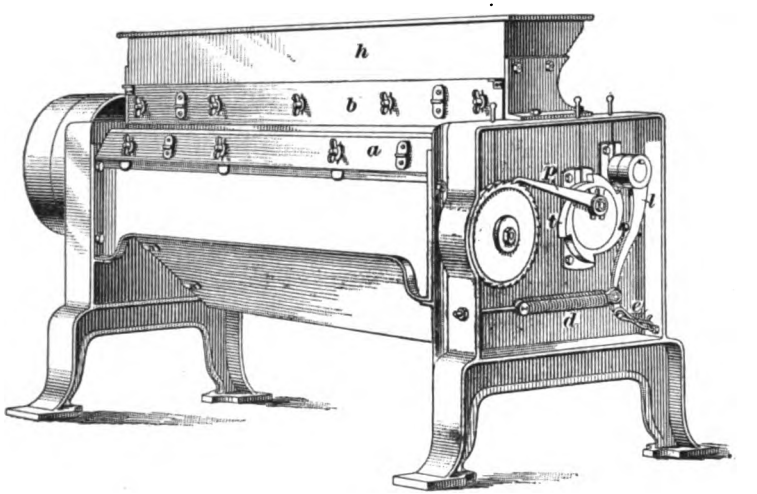

FIG. 68.

wheel has six teeth, so that for every revolution of the driving shaft the fan makes six strokes. The shaft is driven at a speed of from 80 to 90 revolutions per minute; consequently the machine gives from 480 to 540 puffs per minute.

The concentrates discharge beneath the screen is controlled by a long, horizontal grooved roller *r*, Fig. 67, having a fine-tooth ratchet at the lower end. This ratchet is driven by a pawl *p* from the trip wheel *t*. The bearing pin of this pawl is fixed in a radial slot in the trip wheel, so that the throw of the pawl, and consequently the rate of

discharge, may be adjusted independently of the speed of the other parts.

Though this jig has received the endorsement of many good engineers, and has given good experimental results, it has not succeeded in displacing the water jig to any extent. It works best on very fine sizes, much below that at which the efficiency of the hydraulic jig ceases. It may eventually find a field of usefulness in regions where water is very scarce.

RECIPROCATING-SCREEN JIGS.

98. Reciprocating-screen jigs are very little used, particularly in America. They get out of order more easily than piston jigs, the wear is greater, and the increased suction on the back stroke is also a disadvantage. They do away with the extra width required for piston compartments, but in all other respects are inferior to piston jigs. The best example of this type is **Green's jigger,** in which the screens are moved up and down by double eccentrics, like the plungers of stationary-screen jigs. The primitive spring-pole hand jigs were also of this type.

JIG DISCHARGES.

99. Jig discharges are of various forms, suited to the size of the ore, the character of the bed, and the method of jigging. In jigging through the screens, the entire open area of the screens may be considered as a discharge for the concentrates. The middlings are discharged automatically by one of the various gates described farther on, or are allowed to accumulate, and are then discharged at intervals through holes in the side of the box, just above the level of the bed of coarse material, the holes in the meantime being kept plugged. The tailings are discharged over an ordinary tailings dam. In jigging coarser material, which does not go through the screen, the concentrates and middlings are either discharged through holes in the side of the box, plugged as described above, or through various forms of pipe or siphon discharges.

100. Pipe Discharge.—The simplest and most common form of pipe discharge is merely a pipe running up through the jig box and sieve. The lower end may be left open for continuous discharge, or kept closed and the concentrates discharged at intervals, as desired. The latter scheme presents two disadvantages. The first of these is that, the ore bed remaining on the screen for some time, the particles rub against one another and wear away a fine slime of rich ore, the greater part of which is lost. The second objection is that, to be sure that the concentrates are completely discharged, the discharge must be continued till the gangue commences to come through the discharge-pipe, and the pipe will necessarily be left full of gangue, which will come out with the next clean-up.

On the other hand, however, the separation, when the continuous discharge is employed, is not quite so clean, and the discharge must be very carefully regulated ; but this can be done by means of slides in the lower ends of the pipes, by which the area of the discharge orifices may be adjusted. The use of continuous discharge saves the time that is lost, in discharging intermittently, by the shutting down of the machine, and on the whole it may be considered the best practice under ordinary conditions.

The opening of the discharge-pipes for the screen concentrates is flush with the top of the screen. If more than one class is to be concentrated in the same screen, as galena and pyrites, the pipe for the discharge of the lighter concentrates (pyrites) is carried up through the bed of galena. Three pipes are sometimes used in this way, two of them discharging clean minerals, and the third (the middle one) discharging a class composed of the two minerals mechanically combined. Middlings of gangue and ore may also be discharged through pipes, and the scheme may be employed for a middlings discharge in jigging through a bed by extending the pipe up through the bed of coarse, heavy material. Pipe discharges are largely used for fine and medium sized ore, but if the ore is very coarse, the pipes are apt to clog, and some form of discharge must be adopted

that is less liable to pack and is more accessible for cleaning in case it does pack. Various devices have been invented with these objects in view, but the *Heberle gate* has superseded all others and is now used almost exclusively in America for coarse jigs, and has to a great extent replaced the pipe discharge for the finer sizes.

101. Heberle Gate.—The beds of ore on the jig sieves, being kept loose and full of water, flow back and forth like heavy liquids; they can be run or siphoned off, and have, in fact, all the characteristics of fluids. The Heberle gate takes advantage of this fact. The gate is illustrated in Fig. 69, and it consists of a rectangular opening *f* in the side of the jig box above the screen. The size of this opening is governed by an adjustable slide *c*, through an opening in which the concentrates discharge. Sometimes a double slide is used at *c*, so that both the top and bottom of the opening through which the concentrates discharge can be controlled. Behind the aperture there is a U-shaped piece *a*. This is secured against the side of the jig by means of the band *b*, which terminates in bolts that pass out through the side of the jig and are secured by nuts on the outside. By loosening these bolts, the shield can be moved up and down in such a manner as to regulate the distance between its lower edge and the face of the screen. Ordinarily for discharging concentrates, the shield *a* is placed so that the coarsest material can just pass under its lower edge without clogging between it and the screen *e*. The thickness of the bed of concentrates is controlled by raising and lowering the slide *c*, which regulates

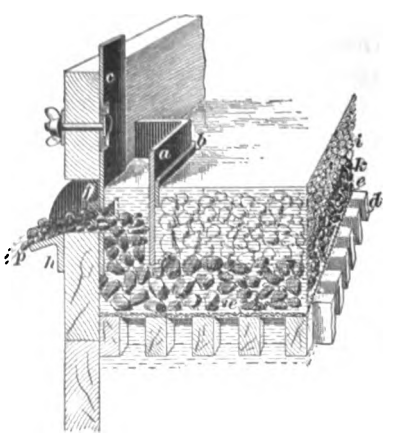

FIG. 69.

the height of the discharge opening. This can also be effected by regulating the supply of ore. The shield *a* prevents the tailings and middlings from flowing out through the opening in the slide *c*, but allows the concentrates to run under; and the weight of the ore and gangue on the bed forces them up inside of the shield, on the principle of the siphon, to a level considerably above the concentrates on the screen, but necessarily lower than the top of the jig bed or material on the jig, on account of the fact that the material on the jig is composed of heavy and light particles, while the concentrates are all heavy particles. A gate constructed on this principle can be used as a middlings discharge by simply raising the shield *a* to a sufficient height above the screen so that the middlings will flow over the concentrates and out through the siphon discharge. The lift is very short, so that the discharge is not apt to clog, and the top of the shield or gate *a*, being open, the jigman can tell at a glance just how the machine is working, and, if the gate clogs, can reach his hand in and clear it out. In the illustration, *d* represents the wooden grating which supports the screen *e* on which the jig bed rests; *k* represents the bed of concentrates, while *i* represents the gangue material above. The opening *f* in the side of the jig box is usually provided with a small spout *h*, over which the concentrates discharge, as at *p*.

There are various other forms of siphon discharge—as siphon pipes, etc.—but they are all more or less complicated, or require careful attention to prevent clogging, or take up too much of the screen space, and for these reasons are not in general use.

102. Tailings Discharge.—The jig tailings ordinarily discharge at the lower end of the box, over a tailings dam, the latter being merely one side of the box, or a part of one side, cut lower than the rest of the box.

In the method of discharge known as the Hartz discharge, both the tailings and the concentrates from each compartment flow on to the screen of the next compartment—

the tailings over the dam and the concentrates through a slit under it. There is a drop of about 2½ inches between each screen, to prevent the material from backing up through the concentrates discharge, and the slit is protected by an apron which prevents the tailings from mixing with the concentrates as they flow over.

When water is scarce, and it is desirable to use as little as possible and still have automatic discharge, mechanical means are used to discharge the tailings. The most common forms of mechanical discharge are a revolving paddle-wheel arrangement, which scoops the tailings over the dam as it revolves, and a scoop at the end of a suspended oscillating rod, working in the same way. The Archimedean helical screw has also been used for this purpose.

103. Stay Box.—Another water-saving device is the stay box. This is merely a box or extra compartment built on at the lower end of the jig box. When a stay box is used, the tailings discharge into it through a slit which is 2 or 3 inches lower than the overflow of the stay box, instead of over a dam. This gives a constant head or back pressure against which the tailings must discharge. The box also acts as a settling box or hydraulic classifier; any heavy particles which may be in the tailings settle to the bottom of the box, while the lighter tailings flow away over the overflow. Another form of stay box discharges entirely through a hole in the bottom, the opening being regulated automatically by a plug attached to a float which rises and falls with the water in the box. As the float rises or sinks, the discharge opening is altered to correspond. The tailings sink to the bottom and discharge, most of the water being retained.

104. Jigs are usually built of wood, held together by bolts and lag-screws, and, if well constructed, will last for 8 or 10 years—working a single shift. Sheet-iron jigs, though sometimes used, are not practicable for ore milling in general, as in the majority of mills the only water obtainable is more or less acid, being pumped either directly from the

mines or from streams into which the acid waters from the mines drain, and this acid corrodes the iron and soon renders it rotten and worthless. Moreover, the constant vibration shakes iron jigs to pieces in a very few years unless they are very strongly made.

Jig boxes are usually 3 feet to 3½ feet square in the clear. The areas of the piston and screen compartments are usually equal, though for coarse jigging the piston compartment is sometimes reduced to ¾ or ⅔ of the area of the screen. The space beneath the dividing partition should never be of less area than the piston compartment, to avoid contraction of the water column. The bottom of the jig box is in fine jigs sometimes built semicircular, as this form obstructs the water less than sharp angles and gives a more even flow. The speed of the jig varies from 75 strokes per minute for coarse ore to 200 and even 300 strokes for the separation of the very fine sizes. Strokes as high as 5¼ inches are used in Europe for very coarse jigging, but in America these coarse sizes are seldom or never jigged, and 2 inches is usually the maximum stroke. The plunger compartment is usually covered by splash-boards.

If chips of wood in the ore cause trouble by clogging the screens of the fine jigs, they may be collected by placing a strip of screen just back of the overflow of the coarse jigs, with its edge dipping slightly beneath the surface of the water.

BUDDLES.

105. The buddle is one of the oldest forms of slime concentrator. Buddles are particularly efficient in treating very fine slimes, too fine to work well on belt or table concentrators, and are used largely for treating the tailings from other concentrators. The principle of the buddle is that of all concentrators—the settling of minerals in the order of their specific gravities. In primitive milling the slimes were run through "labyrinths," settling into pits, where they were "buddled" or separated by hand, stirring the pulp to keep it open and allow the heavier minerals to

settle, and sweeping off the tailings with brooms. The pits were cleaned from time to time.

Later, the inclined-plane tables replaced the settling pit. The first of these was a crude stationary inclined plane, down which the pulp flowed, the buddling being done entirely by hand. The continuous-belt slime washer shown in Fig. 70 is a modification of the plane table, in which the operation is made continuous and the brooming replaced by

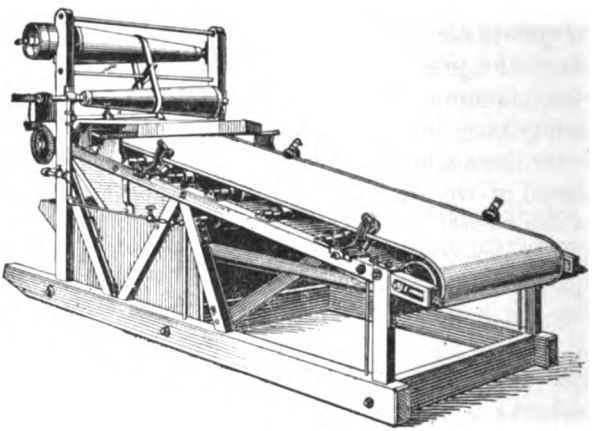

FIG. 70

wash water. An even earlier machine—modifications of which are still in use—was a continuous blanket drawn slowly *across* the pulp stream.

STATIONARY BUDDLES.

106. From plane tables to round buddles, or buddles proper, was a short step, but an important one. These are merely circular tables, with the surface inclined either inwards or outwards at a slope of from 1 to 2 inches per foot. Buddle tables are usually made of wood or sheet iron, with a wooden or cement working surface. The pulp is fed either at the center or at the rim, according as the buddle is an outward-flow or an inward-flow machine, and flows down the table, depositing its contents as it goes, in the order of

their specific gravities. The outward-flow buddle is superior in operation to the inward-flow, as the pulp stream spreads out as it flows, consequently diminishing the force and allowing the material to settle out more completely, while the pulp stream on the inward-flow buddle contracts in its downward flow, giving a deeper and stronger current towards the tailing sluice, and washing away considerable fine mineral with the tailings. Each form, however, has its advantages.

The feed of the inward-flow table being at the circumference, the area over which the headings are deposited is very much larger than in the case of the outward-flow table, where they are deposited near the apex of the cone. A great deal of gangue is also deposited at the head. The middlings class of the inward-flow table is smaller, coarser, and richer than the corresponding class from the outward-flow table, on account of the increasing force of the stream, and the tailings are apt to run rather high.

The outward-flow table, on the other hand, tends to produce a small, clean head class, shading off rapidly into a large, low-grade middle class, while the tailings are nearly barren.

107. The original form of round buddle was a stationary, convex or concave conical table, 11 to 30 feet and upwards in diameter, upon which the pulp was fed, in the case of the inward-flow buddle, from slowly revolving feed-pipes running from a main pipe in the center and discharging at the circumference, and, in the outward-flow buddle, from a slowly revolving central feed. The **Paine & Stephens buddle,** shown in Fig. 71, illustrates the best type of stationary inward-flow buddle. The brushes *b*, *b*, which are used on all intermittent-discharge buddles, are for the purpose of spreading the deposits evenly over the surface of the table. They radiate from the central shaft and revolve with it. The pulp on either inward or outward flow buddles flows down the inclined table, the heavy particles depositing first, and the light, or tailings, last. The buddle is

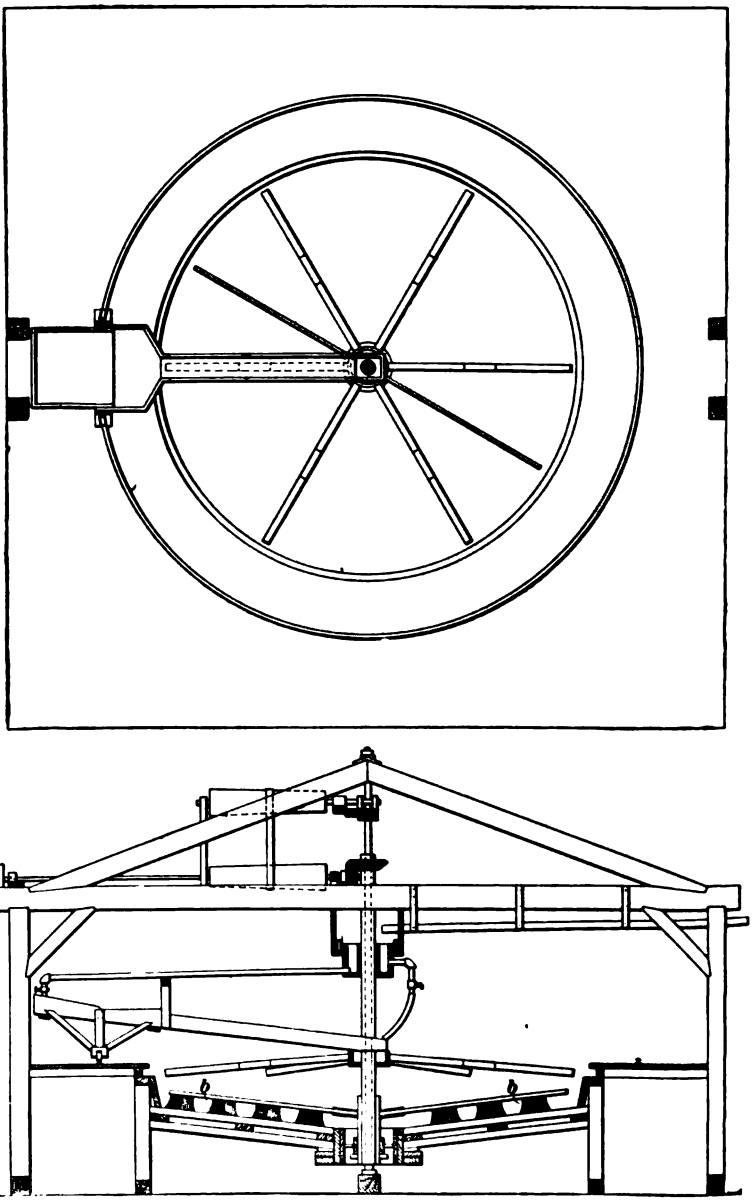

FIG. 71.

usually arranged so that the feed and discharge gates and the brushes are raised automatically by a worm-gearing as the deposit accumulates.

When the buddle is full, which will occur in from 8 to 12 hours, according to the coarseness of the sand, the machine is stopped and the table cleaned. The bed is usually divided into three classes—heads, middlings, and tailings—the three rings being shoveled off separately, and both the heads and middlings, and frequently the tailings, retreated. The middlings are rewashed as before, and again divided into three classes, the heads going in with the first headings and the middlings mixed with others and retreated. The headings are buddled again, the buddle discharge being raised about 3 inches, and the buddle covered with middlings from the tossing tubs to be described later. The heads are then charged. When this is completed, the deposit is again divided into three rings and cleared off, the heads being carried to the tossing tubs for further washing, and the middles again buddled.

REVOLVING BUDDLES.

108. American milling practice has always been remarkable for an aversion towards intermittent-discharge machines, hand-cleaning, and retreatment of products. It was this desire to avoid the formation and retreatment of middlings classes that gave rise to the invention of continuous-discharge jigs, belt concentrators, etc., and it naturally showed itself in regard to the stationary-table buddle with its intermittent discharge and manifold retreatments, and the invention of the revolving-table, continuous-discharge buddle was the result.

The sorting action of the revolving buddle is the same as that of the stationary type, but the operation is quite different. The table itself is given a revolving motion, the rate varying from 1 revolution in 5 minutes for very fine slimes to 2½ revolutions per minute for pulp carrying 8 or 9 per cent. of fine sands. The higher the speed of the table, the greater is the capacity—the limit of the speed being

determined by the grade of the tailings as compared with the gain in capacity. The feeding apparatus is stationary, and the pulp feed extends only about ⅓ to ½ of the way around the table, the remainder being fed by wash water. The inward-flow buddle is comparatively little used except in connection with the outward-flow machine. Revolving tables are made, like the stationary tables, of wood or sheet iron, with a working surface of either wood or cement. The frames are strongly braced. The tables are driven by bevel-gears or worm-gearing, usually from above. Tables usually range from 12 to 30 feet in diameter.

109. Inward-Flow Buddles.—The revolving buddle differs from the stationary buddle only in that the table is revolved, while the feed is stationary, and that the operation is made continuous by the use of wash water, which cleans the various classes of the table as fast as they are formed and carries each to its respective launder. The inward-flow revolving buddle is fed from a trough or launder at its circumference, which is divided so that pulp is fed in about ⅓ of the way round and clear water the remainder. Flowing down the table, the pulp stream deposits its contents. The different classes are washed into their respective sections in the central pit by jets of water from stationary pipes running radially or diagonally across the zone on the table in which they are deposited. Thus, supposing there were three classes, headings, middlings, and tailings, a jet or series of jets about ⅓ of the way round from the forward end of the pulp-feed box, and extending diagonally up from the discharge pit as far as the layer of tailings is considered to reach, will wash this layer off continuously, for the table is revolving and constantly bringing fresh material under the jets. A second jet ⅔ of the way round, and extending across the middlings zone of the table, will carry the middlings to their launder; and a third jet, at the top of the table, washes the headings down just before the particular portion of the table upon which they are deposited comes again into the pulp stream. A reciprocating or revolving

bristle brush is also frequently used with the jets to clean the material off the table; when water alone is used, a slime forms on the surface of the table, which diminishes its efficiency. The revolving brush is the more economical and efficient, a table run with these brushes consuming only about half the power necessary to operate a table with reciprocating brushes.

110. Outward-Flow Buddles. — The outward-flow buddle is the type most generally used in America, as it produces barren tailings, and the product does not have to be put through so many operations and retreatments. Moreover, in American gold milling, the buddles are used to treat only very fine slimes, such as the tailings from fine jigs, vanners, etc., in which the greater part of the valuable mineral is extremely fine—much finer than the greater portion of the gangue—and the particles are carried some distance down the table before they have time to settle through the pulp stream; and if the current gained velocity as it descended, it would sweep these tiny particles along with it and carry them over the tailings gate.

The feed of the outward-flow buddle is at the center, usually from a round iron box surrounding the shaft. This box feeds pulp through orifices in the bottom extending from $\frac{1}{8}$ to $\frac{1}{4}$ way round its circumference and clear water the remainder. The pulp and water fall on to a fixed apron extending a short distance out over the table, and from here flow on to the slowly revolving table, where the mineral duly sorts itself. The table is cleaned by jets and brushes in the same manner as is the inward-flow table.

111. The **Collom buddle** is a rotary buddle which is in form only a slight modification of the old stationary machine. The pulp is fed in through a trough instead of from a central distributor, and is spread by brushes, which are sometimes given a reciprocating motion to prevent the pulp from packing against them. The wash water is delivered from a central box or from an annular pipe at the head of the table. The table is cleared by jets, as in the other forms

described. These tables are sometimes made in two or more annular sections, with a slight step between each; the sections sometimes have different slopes. They are also used for amalgamating tables, by cutting a series of annular grooves in the surface and filling them with mercury, which will amalgamate any gold coming in contact with it.

112. It is frequently desirable to protect the headings from the action of the wash water, and in such a case, either a spiral apron is used, as in the Evans buddle, described in Art. **113,** or the wash water is not fed over the apron, but issues from holes in a spiral pipe hung in such a manner that the best headings are not subjected to the action of the wash water.

113. The **Evans buddle,** or slime table, shown in Fig. 72 protects the headings by means of a spiral apron

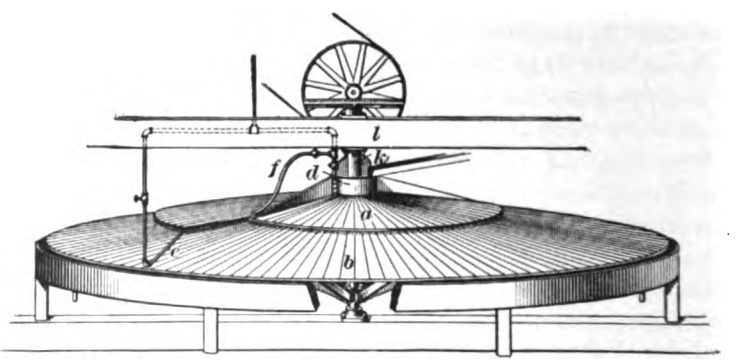

FIG. 72.

placed at the center of the table. The pulp flows over half of the surface of the apron through holes in the bottom of the distributor *d*, which is partitioned so as to feed pulp half way round and clear water the other half. From the apron *a* the pulp flows on to the revolving table *b*. Owing to the spiral form of the apron, the top headings, as they sink, pass at once under it, and are protected from any further action of the pulp stream and wash water until they reappear, at the end of the revolution, from under the widest part of the apron, when the jet from *f* washes them down

into a division of the launder. The middlings are washed off by the jets from the perforated pipe *e*, just ahead of the headings jet, into another division, and the tailings flow off through the remainder of the launder. The position of the slime and water feeds on the apron is regulated by the division board *k*. The feed apron is hung from the frame *l* and can be readily adjusted relatively to the table. The speed of a 14-foot machine of this type is about 1 revolution in 80 seconds, and the capacity 25 to 30 tons per day of 24 hours. The slope or pitch of the table is about $1\frac{1}{4}$ inches per foot and of the apron $1\frac{3}{4}$ inches. The table revolves in the direction *e* to *b*.

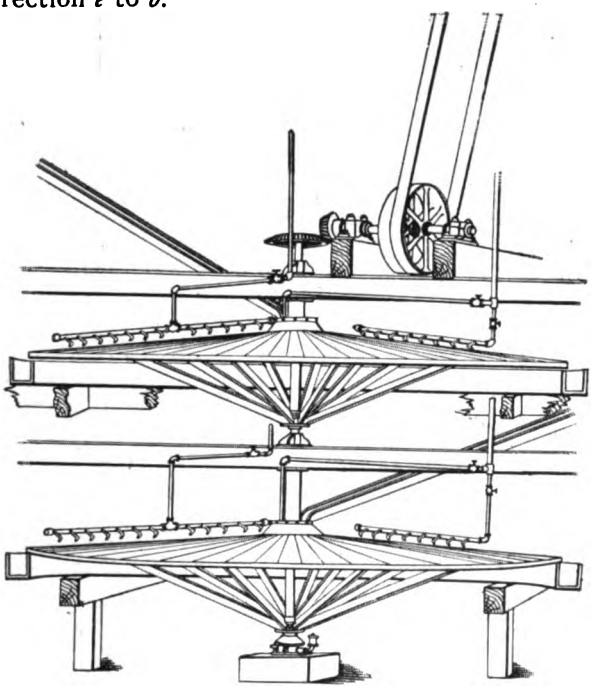

FIG. 78.

114. Multiple-Deck Buddles.—A frequent device to save expense and economize the floor space required by buddles, in mills where there are more than one in use, is to place them one above the other, as shown in Fig. 73. Each

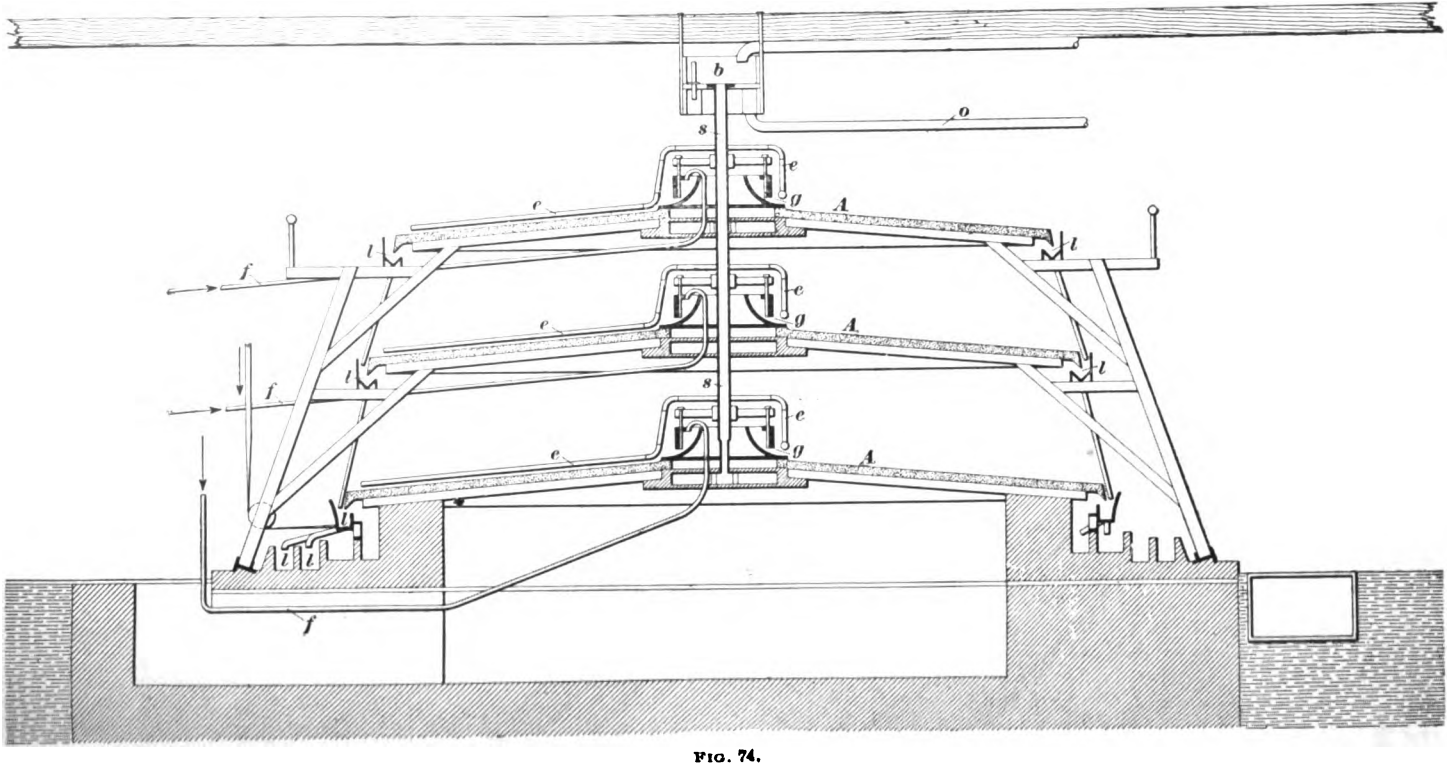

FIG. 74.

table may be fed separately, or the lower table may take the tailings from the upper and further concentrate them. This latter scheme is especially applicable when both inward and outward flow buddles are used. The inward-flow table is placed above and the rich tailings from this table discharge directly on to the outward-flow table below, which catches most of their values and delivers a barren tailing. In this way the best points of each type are taken advantage of. This scheme is employed with both stationary and revolving buddles.

Fig. 74 shows a sectional view of a triple-deck **Linkenbach buddle.** This buddle is of the stationary type, but differs from the ordinary stationary buddle in that the discharge is continuous, both the feed and receiving launders revolving. Each table is about 1½ feet wider than the one above it. When two or three grades of slime are to be treated, the coarsest grade is treated on the top table and the finer grades on the lower tables, in the order of the size of their contents.

Referring to the figure, the pulp is fed on to the tables *A*, *A* from pipes *f*, *f*. The wash water is fed through the hollow spindle *s* and the pipes *e*, *e*, which are attached to it and revolve with it. This spindle also carries the revolving cylindrical gates *g*, *g*, which deliver the pulp successively to all points around the circumference of the distributing aprons. Jets of water from the pipes *e*, *e* clean the classes off the table as fast as they are formed, carrying them down to the launders *l*, *l*. The launders for all but the bottom table are stationary, and are made up of a ring of flat funnels, about 2 feet apart, delivering into pipes leading into the launder of the next table below. In this way all the tables discharge constantly into the lowest launder, which is supported on wheels and revolves at the same rate as the feed gate and cleaning jets. The revolving launder is divided by adjustable partitions into as many segments as it is desired to form classes of mineral. As this trough revolves at the same rate as the cleaning jets, any portion of it is always at the same position with reference to the discharge of the

table, and consequently catches the same class of material. Suppose, for instance, we are forming three classes—heads, middles, and tails—on the table. That portion of the trough closest behind the cleaning jets will catch the tailings which are at the lower edge of the table. By the time the highest of the tailings has washed down the table, the trough will have traversed some distance. At the point where the tailings end, we put a partition. The length of the tailings segment of the launder will be proportional to the width of the zone of material we desire to consider as tailings. The middlings will wash down into the trough behind this partition, another partition being placed between them and the headings which reach the bottom last, and consequently settle in the last portion of the launder. The use of open-bottom launders for the upper table is equivalent to having all the tables discharge into one revolving launder, as the classes, as fast as they are washed down the tables, flow right on through the funnels and pipes into their proper sections of the bottom launder as it revolves. Any overflow in the wash-water feed box *b* is taken care of by the overflow of pipe *o*.

115. The separation of the ore on buddles depends upon the same principle as that on belt tables, bumping tables, etc., namely, the varying tenacity with which the ore particles cling to the table against the force of the descending stream of water; hence the ore, as in the case of the belt concentrators, should be approximately sized by hydraulic sizers. Fig. 98 shows the arrangement of a concentrating mill using jigs, buddles, and vanners—the vanners in this case being used to treat the tailings from the buddles.

116. Tossing Tubs.—The tossing tub, or keeve, is but little used in America, but in Europe its use is quite common in connection with buddles, particularly with those of the stationary type, the headings from which are always further concentrated and cleaned by tossing. The tub is simply a round wooden tub, Fig. 75, about 4 feet in

diameter and 2½ feet deep in the clear, and made usually of 2-inch material. This tub is stationary, but a vertical shaft or spindle passes up through a cast-iron sleeve or cone extending up in the center nearly to the top of the tub, and is operated by a bevel-gearing below. On this spindle and revolving with it is the yoke *a* bearing the stirring paddles *b*.

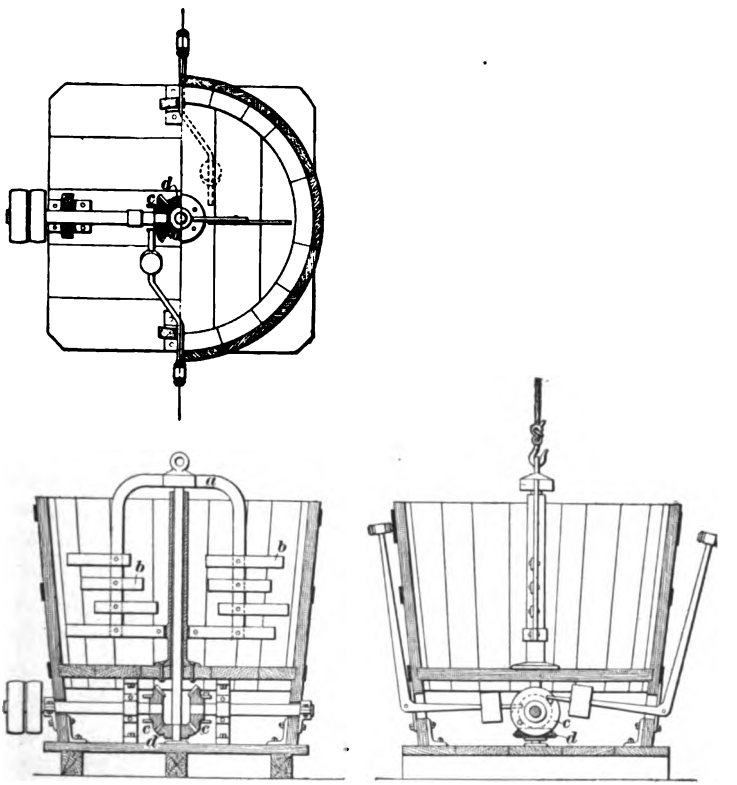

FIG. 75.

This yoke may be lowered and raised into and out of gear by a light tackle over the tub. On opposite sides of the tub are two light mechanical hammers on the upright arms of weighted bell-crank levers. These levers are pivoted under the lower edge of the tub, and their horizontal arms

extend nearly to the center, where they are engaged by pins set in the two vertical bevel-wheels *c*, *c* on opposite sides of the horizontal bevel-wheel *d*. There are two pins in each wheel. As the wheels revolve, these pins raise the ends of the levers. As soon as the lever is released by the pin passing from under it, the weight causes it to drop back suddenly, and the hammer head on the other arm is brought up against the tub with a sharp blow. Each hammer strikes two blows in each revolution of the shaft, which is run at a speed of from 25 to 50 revolutions per minute—the usual speed being about 48 revolutions.

The tub, before starting, is filled about one-third full of water, the yoke is let down into gear, and the hammers are blocked back by wedges between the hammer arm and the side of the tub. The stirrer is then started up. The buddle headings are fed in till the tub is nearly full or the pulp reaches the proper consistency. The yoke is then lifted out by the block and tackle above it and the hammers thrown into gear by knocking out the wedges between them and the tub. The pulp is then allowed to settle while the hammers are tapping away on the sides of the tub at the rate of 50 to 100 blows a minute each. This rapid jarring keeps the water agitated, and the mineral settles in layers of equal falling particles. This settling operation requires from 15 to 20 minutes. The machine is then stopped and the water siphoned off. The upper 2 inches of the bed are usually thrown away as waste. The remainder of the bed is divided into two beds of equal thickness. The headings are set aside and the middles are retossed. The headings from this second tossing are combined with those from the first and sent to the roasters preparatory to chlorination or any other ultimate treatment. The second middles are returned to the buddles and are rebuddled along with the buddle middlings, and the upper layer of tailings is thrown away. The tossing tub is suitable only for the treatment of medium-grade slimes. Sand slimes coarser than 16 to 20 mesh are too coarse to separate properly, and very fine pulp slimes do not settle well.

117. Dolly Tub. — The Dolly tub is another form of slime-concentrating tub. It consists of a stationary wooden or iron tub, having preferably a conical bottom, slanting from the center to the sides, as in Fig 76, with a raised funnel discharge at the center; a suspended vertical shaft driven by a bevel-gearing above carries four arms on

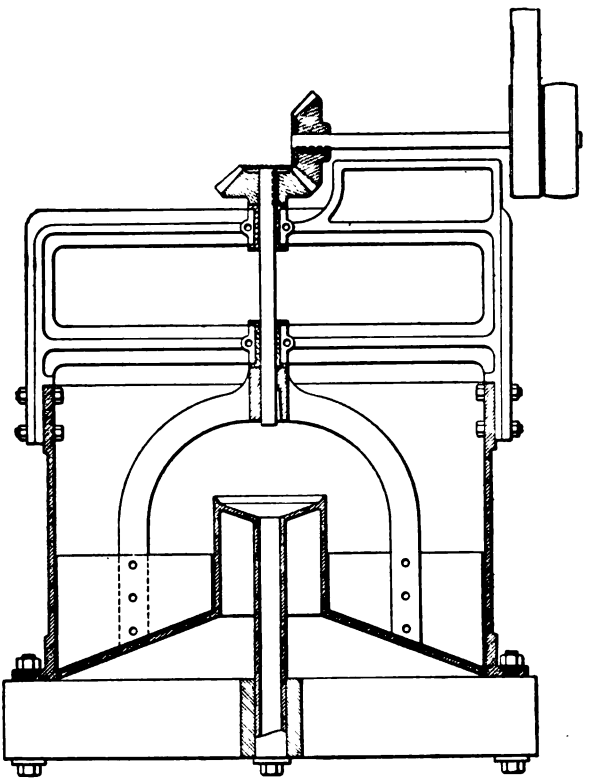

FIG. 76.

which are fixed paddles fitting loosely into the annular space between the sides of the tub and the central discharge cylinder. The feed and discharge of the machine may be either continuous or intermittent. The pulp in the continuous-discharge machine is fed into the tub near the side. The heavier particles sink to the bottom, and the centrifugal

force set up by the revolving paddles, combined with the sloping bottom, carries them to the outside edge, where they discharge through slits or holes. The lighter particles, on the other hand, are kept in suspension by the motion of the water and are gradually drawn into the discharge funnel at the center. The paddles are sometimes dispensed with by delivering the pulp stream tangentially into the tub, the force of the stream thus delivered setting the water in the tub in motion in a circular direction. The whole of the water may be introduced along with the slimes, or part may be delivered through separate pipes, at different points in the circumference of the tub.

BUMPING TABLES.

118. Bumping, or percussion, tables are largely used in stamp milling or refractory gold ores, in which the gold is so intimately associated with iron pyrites that a great deal of it is not freed by stamping, but remains enclosed in the fine particles of pyrite after passing over the plate of the battery. The whole of the pulp from the stamps passes first over the apron plates of the battery, where any free gold it may contain is caught and amalgamated, and from the apron plates on to the bumping tables. The bumping table is essentially a suspended table which is capable of a limited movement, and is subjected to a series of blows or shocks in the plane of its motion. The shocks are delivered by drawing the whole table back by means of cams, and releasing it, when strong springs will throw it back suddenly, and the end of a beam, which is a part of the table, strikes against a fixed block or buffer, bringing the table up with a jar. The table is slanted away from the head or bumping end, and the pulp is fed on at this end, running down in a thin sheet. The heavier particles in the pulp settle to the bottom and cling to the surface. When the table strikes the buffer, the sudden jar causes the mineral to creep a little farther up towards the head of the table, over which such particles as are heavy enough, in proportion to the amount of

surface they expose, to resist the down-flowing sheet of water, finally find their way. The shock also serves to separate the particles from one another and to completely submerge all particles, so that very little mineral is floated away by a coating of air.

The surface of the table should be absolutely true and even, so that all the pulp is subjected to the same action, and should be as thin as possible without danger of buckling under the jar, so that the shock of the bump will send a violent tremor through the whole sheet. If a table be watched while clean water is being run over it, at each blow myriads of small drops of water will be observed to jump up from the plate at right angles. This action, in the regular operation of the table, keeps the pulp agitated and exercises a certain amount of classifying action on the particles. Bumping tables have a very large capacity, making a fairly clean separation, and are very simple in construction and operation; but the loss in slimes is heavy, so that they are never used for very close concentration.

119. Gilpin County Bumping Table.—This table, although one of the earliest of the many forms of percussion tables, is still one of the most commonly used, and the original design has remained practically unchanged. The table is typical of the end-bumping class. The construction is as previously described. The cam for driving the table may be either above or below. The return is accomplished either by flat steel bar springs, rigidly fixed at one end, which are forced back by the table on the back stroke, throwing it forwards again as soon as the cam releases it, or by coiled springs. The double table is about 4 feet wide and 7 feet long. There are two plates, one on each side of the bumping beam, set on a slope of $\frac{3}{4}$ inch per foot for the greater portion of their length. On the last 3 feet at the head of the table, the slope is increased to 1 inch per foot.

The pulp is run into the rectangular feed box, towards the head of the table, and flows gradually on to the table. The wash-water box is set above the feed box in order that

the concentrates may be washed clear of slime and gangue before passing over the discharge. The head of the table is always set away from the battery, and the concentrates, which are comparatively dry, are allowed to accumulate on the floor at the head of the table. The capacity of a table is 10 to 20 tons per day.

120. Perfection Concentrator.—This machine is merely a modification of the previous one. The bumping

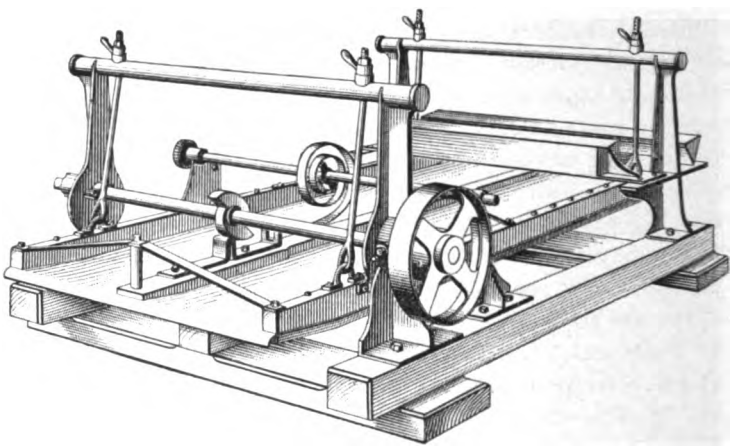

FIG. 77.

beam is placed underneath the table, and one single sheet of copper is substituted for the two sheets in the Gilpin County bumping table. The height and slope of the table can be adjusted by means of nuts on the hangers. The coiled-spring return is used. The table is shown in Fig. 77. Its capacity is about equal to that of the double Gilpin County bumping table, but it weighs only about two-thirds as much.

121. Rittinger Side-Percussion Table.—The side-percussion table is but little used in America, though it is quite common in Europe. The table is hung on a slope which is adjustable between 3 degrees and 6 degrees. As the name indicates, the swing and shock are lateral, the beam running across the table on the under side. The table is driven

by cam and springs, as in the end-bump table, the amount of the swing being also adjustable. The pulp is run in at the upper corner of the table, on the side opposite the buffer, and flows downwards in a thin stream. The wash water is also introduced at the head, between the pulp feed box and the buffer side of the table. As the pulp and water flow downwards in a thin sheet, the heavier mineral sinks to the bottom and is gradually worked over towards the buffer side by the side jars. Those particles of mineral which, in proportion to their weight, present the least surface to the down-flowing stream naturally require the longest time to traverse the length of the table, and are consequently exposed to a greater number of shocks than the lighter particles, and are worked farther over towards the buffer side. In this way the discharge over the lower end of the table may be divided into any number of classes desired, ranging from very poor tailings on the feed side of the table to rich concentrates on the buffer side. Each class discharges into a separate trough or compartment. The tables are usually double and are divided by a strip down the middle, each side having a separate feed. Many materials have been tried for the surface, but cast-iron and slate or marble slabs are found to give the best results, and are now generally used. The table performs a very good separation, but the class of pure concentrates is comparatively small, and the formation of middlings is undesirable in the class of work for which bumping tables and vanners are used in America, and, moreover, the product is mixed with large quantities of water and requires settling after it comes from the table, so that the side-percussion table can hardly hope to supplant the end-bump table to any extent in America. The wear on the cams and tappets of percussion tables may be reduced by the use of roller tappets.

VANNING MACHINES.

122. The principle of all vanning machines is the same as that of the gold pan and batea, that of separating the heavier mineral from the lighter by gently shaking or

vanning the pulp, the mild agitation keeping the particles of the lighter mineral in suspension, while the particles of the heavier mineral sink to the bottom. This same principle enters largely into the operation of the bumping table. By arranging the machine with a constant automatic discharge, the operation is made continuous. This is accomplished with vanning tables by suspending the table and giving it a horizontal jerking motion by means of cams and springs or by eccentrics. The table moves slowly out to the end of the stroke, and returns with a jerk which gradually works the heavy mineral which has settled to the bottom of the stream of pulp running over the table, along or across the table, in a direction opposite that of the jerk. The Wilfley table is the best example of this type of machine. In the belt vanners the operation is made continuous by precipitating the mineral on a slowly moving endless rubber or canvas belt, so that the whole precipitating surface is constantly advancing, carrying with it the mineral accumulated on it. Of this type are the Frue, Embrey, and Lühring vanners, the Woodbury concentrator, etc.

VANNING TABLES.

123. There have been numbers of vanning tables invented, but with the exception of the Wilfley table none of these are of any particular importance, as, with this exception, they can all be replaced to good advantage by percussion tables.

124. Wilfley Table.—The Wilfley table, shown in Fig. 78, is a flat linoleum-covered table, 16 feet long by 7 feet wide, set on rollers, and slightly inclined from front to back. The table is moved forwards by a toggle-joint arrangement, and is brought back by springs, with an endwise jerk, which gradually works the concentrates down to the discharge end. The feed box is at the back of the table, extending from end to end, and is divided by a movable gate, the pulp being fed in one end and clear water along

the rest of the length, keeping the headings clean, so that the operator can tell at a glance how the table is working.

A set of cleats, 2 to 7 in number, according to the character of the ore, is nailed along the table parallel to its

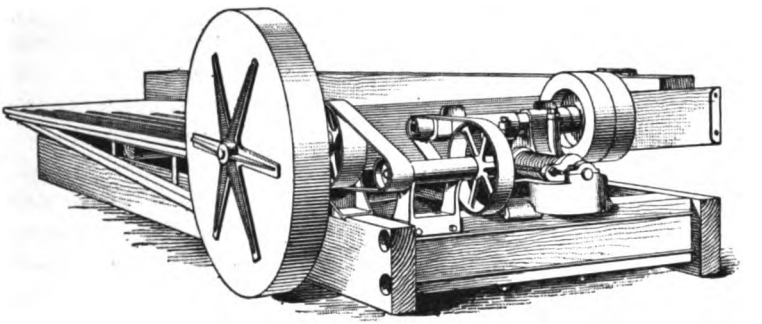

FIG. 78.

length. These cleats taper gradually from ½ inch thick at the upper, or tailings, end of the table, to a feather edge at their lower end. The first and longest cleat is put on towards the lower edge of the table and runs up to within 2 feet of the head. The other cleats are successively shorter, the top one being about 4 feet long. The pulp is fed in as near the tailings end as possible, and the heavier mineral sinks to the bottom and clings there. The cleats prevent it from sliding straight across the table and off, and at the same time allow the particles of lighter minerals, which are held in suspension in the water by the jerk of the table, to pass over and off. The tapering of the cleats provides for a considerable range in the size of the particles of gangue and renders the extremely careful sizing which must be done for most concentrators in order to get the best results altogether unnecessary. The finer gangue, which is held in suspension in the stream of water, is carried over the cleats with it, but the coarser particles sink. At each jerk of the table, however, they are thrown momentarily into suspension, and as they work towards the end of the cleat, they finally come to some portion which is low enough to allow them to pass over. This operation must be repeated at

each cleat. The space between the end of the lowest cleat and the head of the table allows the middlings, or unseparated ore and gangue, to pass over the edge of the table into a middlings trough, through which they flow to a wheel conveyer, which raises them into a trough returning to the feed trough, to be retreated. This insures a clean heading and at the same time prevents the loss of the mineral in the middlings. An inclined shield prevents the tailings from entering the trough. This table has shown a remarkable saving, taking the ore right from the stamps, like the bumping table, without previous classification; and it has been proved that it can compete, at least on even terms, with the best of the belt vanners, and has a much larger capacity—15 to 25 tons in 24 hours, or equal to the best bumping tables, with a much better separation.

BELT VANNERS.

125. Belt vanners are of two types: the side-shaking and the end-shaking. The principle, however, is the same in both. The end-shaking vanner is comparatively little used, as the side-shaking machine is the better, both in principle and construction. End-shaking machines, however, are still used in some mills where the conditions are such that they do practically as good work as the side-shaking machines; but they require a larger amount of water, a greater inclination of the belt, or a more rapid shaking motion than the side-shaking machines, in order to do the same work.

126. Frue Vanner. — The Frue vanner, shown in Fig. 79, is the original side-shaking machine, and is typical of the class. It consists essentially of a continuous rubber belt traveling slowly up a slight incline and shaking rapidly back and forth sideways. The belt is usually 4 feet wide—though 6-foot belts have been used—and has elastic raised edges. It runs over two large galvanized-iron rollers *A*, *A*, 13 inches in diameter and 12 feet apart from center to

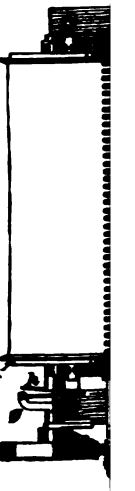

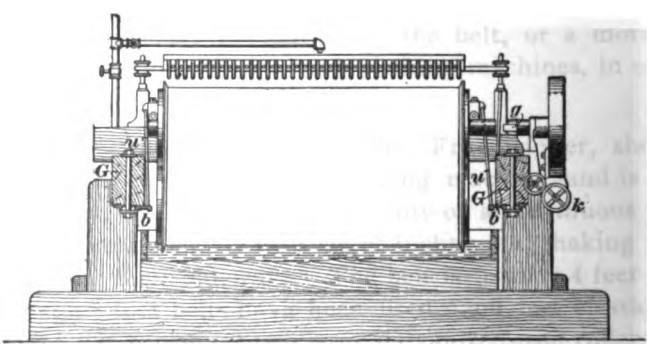
a
u
G
b
u
G
b
k

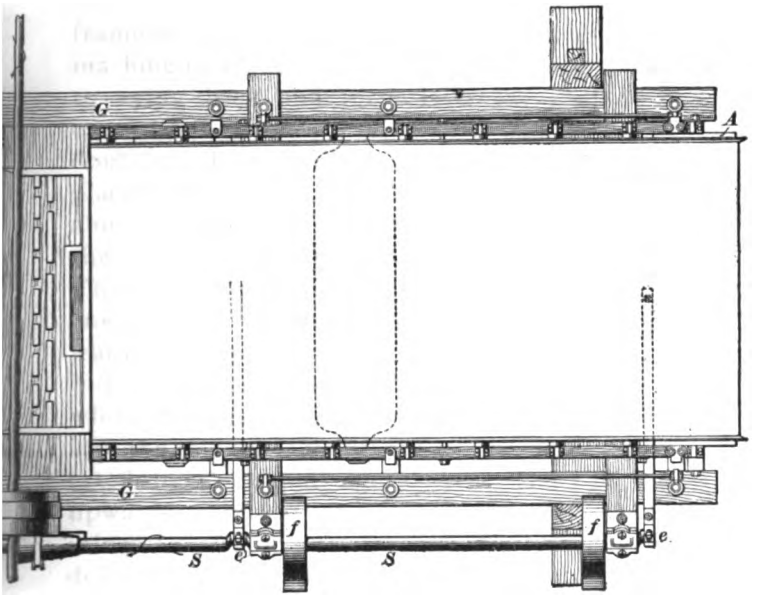
G
A
G
f
f
e
S
e
S

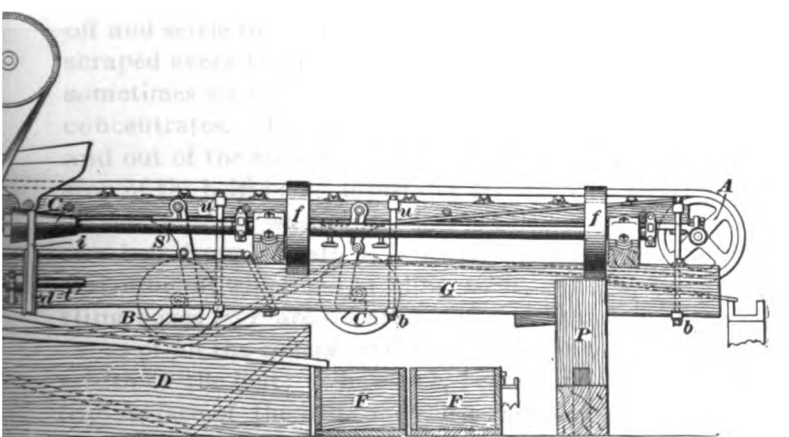
C
u
f
u
f
A
i
S
G
d
t
B
C
b
b
P
D
F
F

center, set at either end of a slightly inclined frame. This frame is supported from the fixed frame or table of the machine by eight flat steel rods or springs, which allow it to swing back and forth laterally, and eccentrics on a crank-shaft give it a rapid side shake—about 180 to 200 double strokes per minute being the average speed, the displacement or throw being 1 inch. A number of small rollers along the top of the shaking-frame support the belt between the main rollers, and keep the surface smooth and even. The pulp flows on to the belt from a distributing box about one-fourth of the way down from the head, and flows downwards in a thin sheet.

The heavy mineral settles to the belt and clings there, while the gangue mineral is carried down with the stream into the tailings launder, the separation being greatly facilitated by the rapid side shake. The belt moves slowly upwards, carrying with it the clinging particles of heavy mineral. These pass through the wash water, which is delivered in a series of jets across the belt just below the head roller, cleaning the headings so that the working of the machine may be easily watched, and such particles as withstand this are carried over the head of the machine into the concentration box *D*, where the concentrates are washed off and settle to the bottom of the box, from which they are scraped every three or four hours into the box *E*, which is sometimes set on wheels for convenience in removing the concentrates. The guide-rollers *B* and *C* carry the belt in and out of the concentration box, and also control the tension of the belt, being adjustable vertically on either side. A second series of wash-water jets is sometimes played against the belt from beneath as it leaves the box *D*, to clean off any mineral which might cling to it, and the overflow settling boxes *F*, *F* are set after the concentration box. The faces of all the rollers except *C* are slightly longer than the width of the belt; *C*, however, bears on the upper or working surface of the belt, and must run between the flanges, and is consequently made narrower, and the corners are rounded or beveled off.

127. The stationary frame of the vanner consists of two long timbers *G*, *G*, bound together by three cross-timbers. The cross-timbers are extended on one side to form a support for the crank-shaft *S*. This frame rests in shoulders cut in the four uprights *P*, *P*. The shoulders in the posts at the lower end of the machine are deeper than in those at the head, so that the whole frame has an inclination from head to foot, and this inclination is further adjustable by means of wedges underneath the lower end of the frame at the shoulders. The eight bearings *b*, *b* for the rods *u*, *u* supporting the shaking-frame are bolted underneath *G*, *G*, the bolt-holes in the bearing being oblong, so that the bearing can be adjusted. The end bearings have each two bolt-holes, the intermediate bearings one each.

The vanner is driven by a belt with a quarter twist from the countershaft pulley to the crank-shaft pulley *p*. On the crank-shaft are three small cranks *e*, *e*, *e*, each ½ inch out of center, which connect by flat steel rods or pitmans to the middle of iron pipe girts extending across the shaking-frame. The crank-shaft also carries two small fly-wheels *f*, *f*.

128. The driving arrangement for the vanner belt is peculiar. A narrow belt *i* passes from a cone pulley *C* on the crank-shaft to a flanged pulley *d* on a worm-shaft *t*. The worm on *t* slowly turns a worm-wheel *w* driving a short shaft, which is in the same line as the axis of the head roller of the belt. On the end of the worm-wheel shaft is a crank *g*, which connects with the free side of a flat spring *h*, the other side of which is firmly fixed to the end of the roller shaft between the two shafts. This spring forms practically a flexible crank connection between the two shafts, and yields to the swinging of the frame. The worm and worm-wheel are covered by a cast-iron casing, which has a limited motion about the worm-wheel shaft on an independent bearing bolted to the stationary frame. This casing also forms the bearing and support of the worm-shaft and its adjusting rod. When the machine is idle, a hand-screw draws the casing around and throws on the casing the whole weight of

the worm-shaft, flanged pulley, and adjusting rod, but when it is in operation, the screw is loosened and the weight allowed to fall on the belt *i*, keeping it tight.

129. The distributing box for the vanner is shown in Fig. 80. It is attached to the frame and shakes with it, the feed-pipe being flexible. The spreading blocks are fastened to the top board of the spreader, shown upside down at (*a*). The distributor should be close to the surface of the belt, in order to get a gentle feed and avoid washing away mineral.

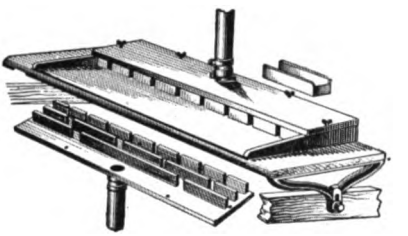

FIG. 80.

In treating the pulp from an amalgamating battery, a silvered copper plate is sometimes used, which sets in the bottom of the box and catches nearly all the amalgam and mercury coming over in the pulp. Or, again, the mercury and amalgam may be caught in a copper well (*b*), Fig. 80, which sets in the box directly under the pipe, so that all the pulp from the battery must fall into it. This well can be removed and emptied at any time.

The wash-water distributor is usually a narrow wooden trough with holes 3 inches apart, through which the water discharges on to the belt. Iron troughs are also used, with spouts of brass 1½ inches apart; by stopping up every other hole, the effect can be made the same as that of the wooden trough. The wash water should fall upon the belt from a height of not less than 1½ inches, in order to secure the best effect. The trough is supported on standards on the stationary frame, and the height is adjustable by hand-screws.

130. There are two styles of belts in use on Frue vanners, the plain and the corrugated. The latter, called by the manufacturers the *improved belt*, has a series of low, flat corrugations or riffles across its working surface. It is claimed by the makers, with apparent justice, that this belt doubles the capacity of the machine, or that one improved

vanner, which is only a little more expensive than the ordinary machine, will do the work of two of the latter. New corrugated belts are much more expensive than plain belts, but wear well; so that, when the capacity of the mill warrants it, the improved vanner should be given the preference. Practically the only difference in construction between the two forms is in the belts, but this necessitates several slight changes in the adjustments. The improved vanner allows the use of a steeper grade and requires more wash water in proportion to the increased capacity. The general grade of the old vanner, or the grade of the frame, is usually from 3 to 4 inches in the length of the frame, with 6 inches as a maximum, and in addition to this the head-roller bearing is about $\frac{3}{8}$ inch higher, with reference to the frame, than the lower bearing, and the small guide-roller next to the head is also raised a little, slightly increasing the grade at the head of the belt. With the improved belt, the average grade is $5\frac{1}{2}$ to $6\frac{1}{2}$ inches, the shoulders in the lower posts being cut correspondingly deeper, and the head roller is raised $\frac{3}{8}$ inch above the tail roller, increasing the grade at the head by that amount. The plain-belt vanner is better for saving very fine slimes than the improved or corrugated belt vanner.

131. Adjustments of the Frue Vanner.—*Plain Belt:* A plain-belt Frue vanner running on ordinary ore should have a speed of about 190 shakes a minute and a belt travel of 28 to 34 inches in the same time, and the grade of the frame should be about 3 or 4 inches. The amount of wash water used varies from 1 to $1\frac{1}{2}$ gallons per minute—just sufficient to keep the field between the water and pulp distributors covered, with no projecting fingers of sand—and there should be from $1\frac{1}{2}$ to 3 gallons per minute in the pulp. The belt should be smooth and even, and should run true on the rollers; there should be a slight corner of sand along each edge of the belt, as sloppy corners cause a loss. If the corners are sloppy, there is too much water in the pulp, and either the supply must be diminished or less water must be

drawn off with the pulp from the classifiers. If they are too heavy, however, more water must be added to the pulp coming into the distributor. If one corner is heavy while the other is sloppy, the distribution of the pulp is uneven. This may be due to looseness of some of the parts, causing a jar, but if everything is working noiselessly and the feed is even across the belt, the fault lies in the adjustment of the latter, and is corrected by driving the slotted bearings *b*, *b* of the flat steel uprights *u*, *u*, supporting the shaking-frame, either in or out by light blows of a hammer, until an even spreading of the pulp is secured. The same result may be accomplished by bending the end of the driving spring in the collar over towards the side of the belt having the heavy corner. The adjustment of the guide-rollers also has a slight effect on the corners.

The condition of the sand corners is also affected by the grade and travel of the belt and the speed of the shake—a slow travel or shake, or a light inclination, tending to give a heavy corner, and a swift travel or shake, or a high inclination, tending to give a sloppy corner; but the grade, travel, and speed of belts are determined by the amount and character of the mineral in the ore and the size of the particles, and the foregoing adjustments refer to the working of the machine after the grade, travel, and speed of the belt have been fixed. The speed of the side shake of the machine depends on the coarseness of the material, varying usually from about 180 strokes per minute for fine slimes to 200 or 210 for coarser sands (30 to 40 mesh). While vanners will handle ore, with good results, directly from the stamps, it is always best, if the capacity of the mill warrants it, to classify the pulp and carry each class to a separate vanner, as the best possible conditions for the working of the machine are thus obtained.

The upward travel of the belt should be adjusted according to the amount of mineral in the ore. The belt is supposed to carry off only the pure mineral in the concentrates. The rate of deposit of the concentrates upon the belt depends upon the grade, the pulp, and wash-water feeds, and the

side shake. These being adjusted, the travel of the belt must be made just sufficient to carry the headings off the table at the same rate as they are deposited. If the travel is too fast, barren sand is carried over with the headings; if it is too slow, the mineral will accumulate on the belt and some of it will wash over with the tailings. As the headings are carried up through the wash water, they are cleaned of the last gangue matter and are washed up into little longitudinal piles between the jets, the piles varying in size with the proportion of mineral in the ore. These headings can be watched as they go over the head of the vanner and should be free from gangue. There should be a slight "head" or ridge of mineral just below where the wash water strikes the belt. If the belt is traveling too fast and is discharging a greater weight of material in a given time than there is mineral in the pulp treated, sand or gangue will be found in this head and in the concentrates as they go over the head of the vanner. If, on the other hand, the travel and discharge of the belt is too slow, the head below the wash jets becomes heavy and gradually extends down towards the pulp feed, and even through it, and a great deal of mineral washes over with the tailings. The travel of the belt is regulated by the adjusting rod and hand-wheel *k*, the thread on which passes through a tapped hole in the worm casing. Turning the hand-wheel carries the flanged pulley *d* and with it the belt *i* up or down the cone pulley. Thus, if it is desired to increase the travel, the worm-shaft and flanged pulley are drawn back towards the head of the vanner and the belt creeps farther up the cone pulley, and the distance through which it travels with each revolution of the crank-shaft is consequently increased; the opposite effect is obtained by moving the flanged pulley in.

The grade of the belt is adjusted by means of the wedges under the stationary frame, where it rests in the shoulders of the posts. Increasing the grade of the belt gives a thinner and more swiftly flowing stream of pulp down the belt and a cleaner heading. The feed, grade, and side shake should be adjusted so that the mineral does not pack on the belt

below the pulp feed; but if the fingers are placed in the stream on the belt, the coarse sands can be felt rolling slowly downwards. Too steep a grade is apt to carry off mineral in the tailings.

Any looseness of the belt is taken up by the guide-rollers *B* and *C*. By lowering or raising *B*, the length of the belt in the washing trough or concentration box may be increased or diminished, thus regulating the time for washing the concentrates.

The bearings of the head and tail rollers at opposite ends of the shaking-frame are bolted to it through slotted holes, and can be drawn in or out by adjusting screws. If the belt shows a tendency to creep over to one side, the bolts of one or both of the bearings on that side are loosened, the bearings drawn out as far as desired by screwing up the adjusting screws, and then the bolts tightened. Or, if this would make the belt too tight, the bearings of the other side may be let in a little instead.

132. *Corrugated Belt:* The mechanism of the corrugated-belt vanner is the same as that of the ordinary machine, and the adjustments are performed in the same manner, but the working of the machine is quite different, on account of the shape of the belt. The grade is steeper than in the ordinary vanner, and about double the quantity of wash water is necessary. The heavy mineral settles in the corrugations and remains there until it passes over the head roller into the concentration box, the light sands washing down over it. The speed of shake should be just sufficient to settle the mineral and keep the sands in suspension, not allowing them to pack on the belt. There should be slight indications of sand corners in the corners of the belt—neither too decided nor, on the other hand, too sloppy. The methods of adjusting to meet the various conditions are exactly the same as in the ordinary vanner.

133. The speed of the vanner is usually predetermined by the coarseness of the material, and when once set up, nearly all the regulation of the machine consists in adjusting

the grade to fit the character of the pulp. The amount and cleanness of the concentrates are regulated by the travel and wash water. An experienced vanner man can tell at a glance how his machine is working, and if anything is wrong, knows just how to correct it; if there are several ways in which this can be done, his experience will indicate to him the most suitable for the case. This is a faculty, however, which can be acquired only by experience. A good rule to observe in the care of vanners is to keep all parts of the machine clean. There should be no splashing of pulp over the sides of the belt. All working parts, in particular, should be gone over frequently with cotton-waste, to prevent any grit getting in the bearings. Good care results in a considerable saving of power. If the power of the mill, and consequently the speed of the vanner, is constant, vanners once adjusted will run right along with very little attention except that necessary to keep them clean, and one man can tend to as many as sixteen machines; if, however, the power is constantly changing, *one* machine will sometimes give a man more than he can do. To get any machine to work properly, it must work under the proper conditions.

There are many other concentrators of this type, all more or less of the same design, but as none have succeeded in displacing the vanner to any extent, and as they all are really forms or imitations of the vanner, they will not be described.

134. Lührig Vanner.—The Lührig vanner is a recent machine of a type intermediate between the side-shaking and end-shaking machines. It is practically a continuous-belt bumping table of the Rittinger type. The belt is not flanged and is horizontal in the direction of its travel, with a slight inclination sideways at right angles to the travel. End blows are delivered to the vanner at the rate of from 150 to 210 strokes per minute, according to the ore, the bumping mechanism being similar to that of the bumping table. The stroke can be varied from $\frac{1}{8}$ inch to $1\frac{1}{4}$ inches, according to the nature of the ore and the size of the

particles. The belt is of rubber, 4 feet wide and 19 feet long (total), and has a travel of 18 to 20 feet per minute. The pulp is fed in through a distributing box at the upper right-hand corner—the belt traveling from right to left—and flows down the belt; wash water is distributed from a perforated pipe running diagonally across the belt. The heavy mineral sinks to the belt and clings to it, and the end jar and the travel of the belt combine to carry it along to the left-hand end; at the same time the mineral works slowly downwards, under the combined influence of the wash water, the jar, and the inclination of the belt. In this way the particles of the greatest specific gravity are carried nearly or all the way down the lower end of the machine before they discharge over the side of the belt. The tailings, which remain in suspension or cling very lightly to the belt, discharge near the right-hand end, while one or more classes of middlings discharge at different points along the belt, according to their specific gravity. The receiving trough along the lower edge of the belt is divided by movable gates or partitions, so that the amount and range of each product can be readily adjusted. This production of middlings classes is one of the principal features of the Lühring vanner. The capacity is about equal to that of the Frue vanner, and the machine uses about twice as much wash water. The relative merits of these two machines are still a subject of dispute. The Frue vanner maintains the supremacy in this country, very few of the others being used, while the Lühring is rapidly gaining a foothold abroad, where the production of middlings is not considered an objection.

135. Embrey Concentrator.—The Embrey concentrator or vanner is typical of the end-shaking vanners. Like the Frue vanner, it consists of an endless rubber belt, running on rollers on a shaking-frame, the essential difference being in the direction of the shake. The driving-shaft is placed across the lower end of the stationary frame, as shown in Fig. 81. On it are a tight and a loose pulley (to which the main driving-belt extends from a parallel countershaft

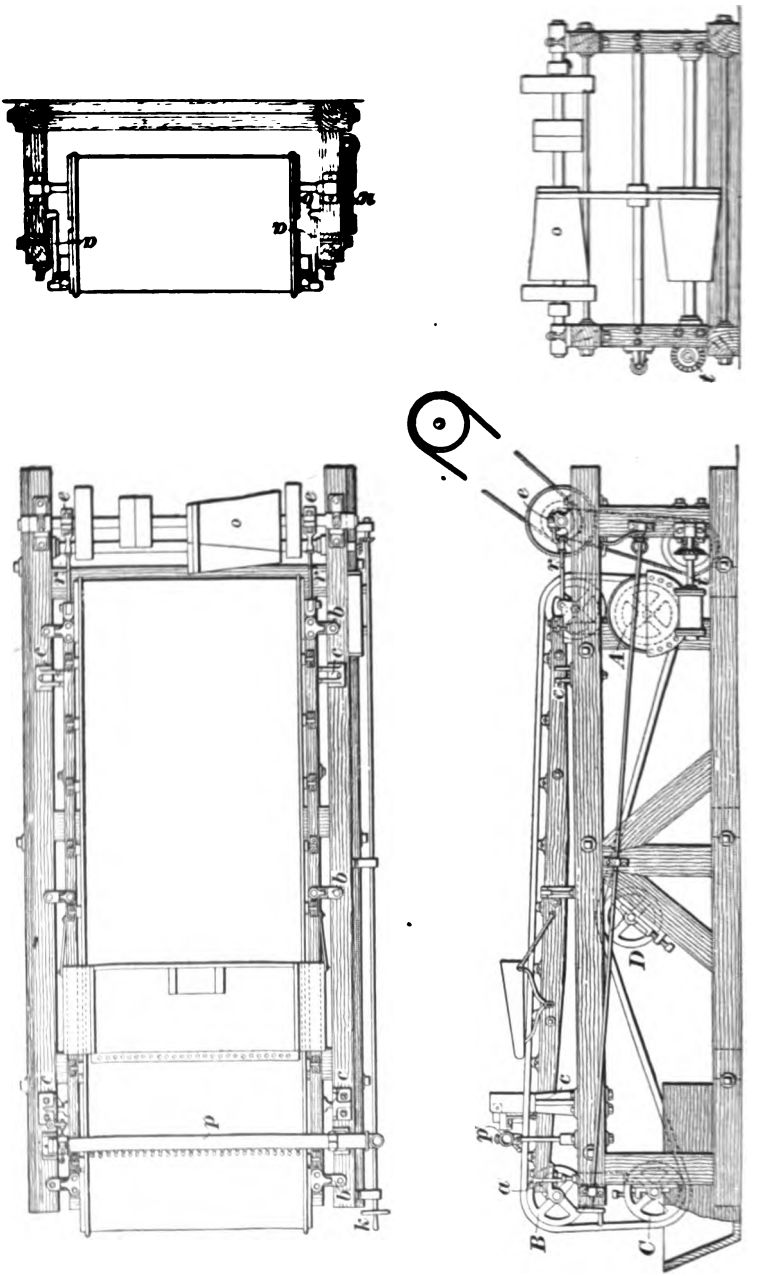

FIG. 81.

above), two fly-wheels, the two eccentrics *e*, *e* driving the shaking-frame, and a cone pulley *o*, from which a narrow belt extends to a second cone pulley on a shaft below the driving-shaft. This shaft drives the worm-shaft *t* through a bevel-gearing, and the worm-shaft in turn drives the worm-wheel *w* and the driving roller *A*, which gives the belt its forward motion. The belt is kept tight by the adjustable roller *D*. The bearings of *B* and *C* are also adjustable. The shaking-frame is supported by six upright legs or toggles *a*, *a*, three on each side, resting in stirrups *b*, *b* fixed to the stationary frame. The frame is driven by the two eccentrics *e*, *e*, which have a throw of about $\frac{3}{4}$ inch and are connected by the rods *r*, *r* with the tail-roller bearings. The legs supporting the head end of the shaking-frame are longer than those at the tail end, giving the belt a uniform grade of about 3 inches in its length. This grade can be increased or diminished at will by means of wedges under the ends of the table.

The shaking-frame is kept in line by four cast-iron standards *c*, *c* bolted to the stationary frame, with projections on the inside pressing against the shaking-frame. One of these standards at the head of the table is lengthened and serves as a support for a bell-crank which gives a slight motion across the belt to the water-pipe *p*, which is supported on spring legs; the other end of the crank is connected by a strap to the shaking-frame. The pulp distributor is practically the same as that on the Frue vanner. In another form of Embrey vanner, the crank-shaft passes under the shaking-frame, upon which falls the entire weight of the belt and lower rollers, causing the machine to run more heavily.

136. The **Triumph concentrator** is an end-shaking machine, somewhat similar to the latter form of the Embrey in construction and operation. The travel of the belt is regulated by a friction-roller, however, instead of by cone pulleys. The distributing trough is of iron and contains quicksilver. All the pulp passes over this quicksilver, which

is kept agitated by a shaft, with stirrers attached, running through the distributor.

137. The **Woodbury concentrator** is another end-shaking vanner, similar to the Triumph in construction, but having the rubber belt or apron divided into seven parts by longitudinal partitions.

The end-shaking concentrators all require a more rapid shaking motion than the side-shaking machines to accomplish the same work, and are run at an average speed of 220 to 240 double strokes per minute.

138. It is absolutely necessary for the efficient operation of concentrating machinery that it be kept clean. The operator should go over all working parts frequently with cotton-waste, so that no dust or grit will have a chance to work into the bearings, and the entire frame should be wiped off at least once a day. Belt vanners are not suitable for working sizes coarser than 30 mesh, while a still smaller maximum size, say 40 mesh, is preferable. As the sizes become finer, the slope of the belt and the speed of the shake are diminished.

DRY CONCENTRATORS.

139. Centrifugal Dry Concentrator.—The Clarkson & Stanfield dry concentrator separates ore from gangue through the agency of centrifugal force. The carefully sized ore is fed on to a rapidly revolving horizontal disk or shallow pan, the rim of which is perforated with a large number of small holes. The ore is thrown through these holes by centrifugal force and falls into a series of annular troughs surrounding the central disk. As centrifugal force varies directly as the mass (or as the specific gravity), the particles will be discharged from the plate with a force proportionate to their specific gravity, and the heaviest particles will therefore be thrown farthest. In addition to this sorting effect of centrifugal force, the particles of heavy mineral present less surface to the resistance of the air, in proportion to their weight and momentum, than the gangue

and middlings particles; consequently, to a certain extent, the law of equal falling particles enters into the action of the concentrator; but this is much less marked and important than in the hydraulic concentrators, air being a much rarer (thinner) medium than water. This concentrator has given good results in experimental runs, but has not been adopted in practice to any extent.

140. Wood's Dry Placer Miner.—Wood's dry placer miner is a form of dry concentrator designed for treating gold-bearing placer sands without the use of water, the absence of which has heretofore rendered worthless many otherwise valuable placer fields. The machine is allied to the pneumatic jig, the sand being separated from the gold by a blast of air.

The material must be quite dry in order to obtain satisfactory results. It is passed over a grizzly, which removes the larger stones and boulders. The finer material falls through into the disintegrator trough, through which run two shafts carrying paddle blades or beaters. These blades are curved like the blades of a screw-propeller, so that the dirt is fed ahead as well as broken up. From the disintegrator the material passes on to the inclined table on which the separation is performed. This table consists of a perforated metal sheet, forming the stationary cover of a bellows, and is covered with a blanket or carpet of such texture that it allows the passage of air without permitting any dirt to fall through into the bellows. Copper riffles are placed at intervals across the table and secured in position by the side boards, which are held in place by clamping screws, so that they may be readily removed for cleaning up. A sheet-steel cover slides up between the side boards, about 6 inches above the surface of the table, to prevent the escape of dust. The bellows and table are hung from flat steel-spring standards and are given a short longitudinal shake by means of eccentrics on the driving-shaft, which runs in bearings across the lower end of the frame. The disintegrator and bellows are driven from the same shaft through a system of gears

and countershafts. The bellows are operated by connecting-rods to slotted crank plates at either end of a countershaft. The throw of the cranks, and consequently the stroke of the bellows, may be regulated.

The blast of air from the bellows through the holes in the table blows away the dust and carries the coarse, light sand to the top, like a hydraulic jig, and the shaking of the table carries it down and discharges it. The grains of gold, however, sink to the bottom and catch on the blanket and behind the riffles, together with more or less sand and heavy minerals. These concentrates are cleaned up at least once a day, by removing the cover, side boards, and riffles, and brushing the concentrates from the blanket, and are cleaned by panning or amalgamating. The machines are provided with link-belt feed and tailings elevators if desired. The capacity is given as from 8 to 12 tons per hour. A smaller machine is also made for prospecting, with the construction modified to adapt it to hand labor, with a capacity of from 1,500 to 2,000 pounds an hour.

These machines have given satisfactory results in test runs, and their invention may mark the birth of a new era for the hitherto worthless desert placers of Arizona, Utah, New Mexico, and other Western States and Territories.

141. The **pneumatic jig,** described in Art. **97,** also comes under the head of dry concentrators.

MAGNETIC CONCENTRATORS.

142. All substances of whatever nature are to some extent sensible to magnetism; that is, they are either attracted or repelled by the poles of a magnet. In the case of only a few, however, is this property appreciable under ordinary conditions. Substances that are attracted by the magnet are called *paramagnetic;* those that are repelled, *diamagnetic.* Iron is notably paramagnetic; nickel, cobalt, and chromium are feebly, but appreciably, attracted by a hand magnet. Manganese, titanium, cerium, platinum,

palladium, uranium, and osmium, though generally considered non-magnetic, are paramagnetic, and can be sensibly attracted by very powerful electromagnets. All the other metals are more or less diamagnetic. The minerals of the different metals show the same magnetic characteristics as the metals themselves, but in a much smaller degree. Of the iron minerals, magnetite is quite strongly attracted by a hand magnet, and pyrrhotite somewhat less strongly; while the rest, with occasional exceptions, are apparently non-magnetic. Some of the nickel, cobalt, and chromium minerals are very feebly attracted by a hand magnet, but most of them are apparently non-magnetic.

The apparently non-magnetic minerals may be made quite strongly magnetic by either an oxidizing or a reducing roasting. This fact has been taken advantage of in the concentration of lean hematite, limonite, siderite, and pyrite ores. The roasted ore is passed through the fields of strong electromagnets, separating the magnetized mineral from the non-magnetic gangue, and thus raising the grade of the ore to a point where it can be profitably smelted. The tendency at present, however, is to do away with the trouble and expense of roasting and to concentrate directly, by increasing the strength and modifying the design of the electromagnets. Magnets are now made which will attract any of the iron minerals except pyrite without previous roasting, and manganese minerals have been successfully concentrated by magnetic concentration.

When concentrating an ore of iron by means of the magnetic process, not only is the percentage of iron in the resulting product raised, but in some cases deleterious elements, such as phosphorus or sulphur, may be removed. This is especially true in the case of ores which are naturally magnetic and in which the phosphorus occurs in small crystals of apatite and the sulphur in crystals of pyrite.

When the magnetic process is used for the concentration of any mineral, the material should be crushed to the size of the average particles to be separated when it is first fed to the machine. The results will be high-grade

concentrates, practically barren tailings, and a middle product which will require further crushing and reconcentration.

143. Among the successful applications of the magnetic concentration may be mentioned the following:

The separation of ores of iron from the gangue materials; the separation of minerals containing iron from pure or nearly pure zinc minerals; the separation of the various materials in the monazite sands; the separation of garnetiferous rocks where it is desired to obtain pure garnet; the removing of garnet from corundum ores, and, in fact, for the separation of nearly any iron mineral from other compounds.

By a proper adjustment of the machines, it is possible to make separations between two compounds having different magnetic properties.

144. Magnetic concentration is still in its infancy. New and different machines are constantly being brought out for use in connection with this process. But all machines can be divided into two general classes: one in which the material is brought within the field of the electromagnets, and the magnetic material thus deflected far enough from the path of the main stream to be deposited in a separate receptacle; and the other in which the magnetic material is actually picked out of the stream of ore, carried off, and deposited in a separate receptacle.

The first class is used only for quite strongly magnetic material, such as magnetite or roasted ores. In a typical machine of this kind, the stream of ore falls past a series of electromagnets, set off to one side, and the attraction of these magnets draws the magnetic material somewhat out of the path of the main stream, so that it falls into separate concentrates chutes.

In the machine of the second class, the material falls or is conveyed by a belt conveyer into the field of the electromagnets, which pick up the magnetic material. The nonmagnetic material goes on and is discharged as tailings. The magnetic material is carried along on the under surface

of a continuous traveling belt, or on the surface of a cylinder encasing the magnets, until it passes out of the field of the magnets, which remain stationary, and then it drops off into a concentrates receptacle or on to a conveyer of some sort.

MISCELLANEOUS FORMS.

145. There are, besides the concentrators already described, various concentrators of miscellaneous forms and minor importance. In placer mining and in cleaning up around amalgamating plants, the pan and batea, both in the hand and as mechanical forms, are frequently used for cleaning the amalgam from the plates.

146. The hand pan is usually made of either Russia-iron or agate ware. It is a shallow pan, 10 to 12 inches in diameter on the bottom, 17 to 20 inches at the top, and 2½ to 3 inches deep, pressed out of a single sheet of metal. The amalgam is placed in it, softened with quicksilver, and washed with an excess of water. The pan is grasped by both hands, on opposite sides, and given a gentle, circular, swinging motion, under the influence of which the mercury and amalgam settle to the bottom, while the lighter material rises and may be poured off with the water.

147. The batea is a shallow, conical bowl, usually about 20 inches wide and 2½ inches deep, the sides meeting at a point in the center. It is made, like the pan, of sheet-iron or agate ware, or sometimes of wood, the whole batea being turned from a single block of wood. It is used in the same manner as the gold pan and for the same purpose.

148. The object of the mechanical pans and bateas is to imitate as closely as possible the motion and action of the hand articles in the treatment of much larger quantities of material than can be handled in the latter. This is accomplished by various mechanical devices for giving the pan either a shaking or a gyratory motion. The device for driving the mechanical batea, described in the next paragraph, is of the latter class.

The mechanical batea is shown in plan in Fig. 82 and in elevation in Fig. 83. The pan is of cast iron, about 4 feet wide, with a rounded bottom and a plug in the center. The front end, or spout, is set on a roller, allowing the pan to slide back and forth, while the back is supported by two light iron rods, allowing the pan to swing freely. The pan is given a rapid gyratory motion by a crank at the rear, on a short vertical shaft driven by bevel-gearing.

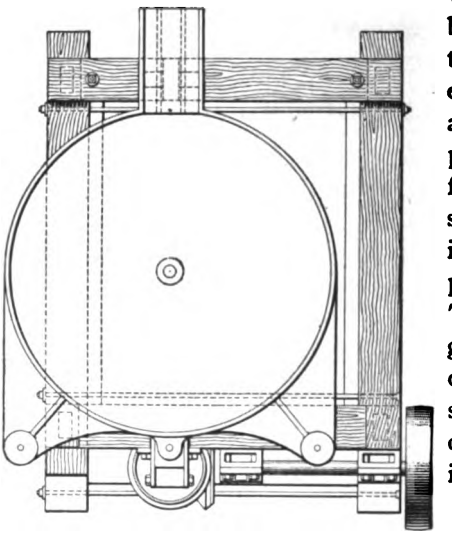

FIG. 82

149. Hendy Concentrator. — The Hendy concentrator is a form now almost obsolete, but at one time considerably used in America. Like the mechanical pan and batea, it was designed to imitate the vanning motion of hand concentration, and was adapted to the concentration of tailings on a large scale, with continuous feed and discharge. It consists of a shallow pan, 5 or 6 feet in diameter, on a vertical shaft. The pan is given a shaking or oscillating motion by means of two connecting-rods extending from cranks on a short shaft set on the framework of the machine to pins in opposite sides of the pan. The outside of the pan is an annular groove or gutter about $2\frac{1}{2}$ inches wide and increasing from zero at the back of the machine to $2\frac{1}{2}$ inches at the discharge in front. The floor of the pan inside this groove rises with a gentle curve to nearly the height of the rim. A circular basin at the center, about 14 inches in diameter, with a gate in one side, serves as a tailings discharge. The pulp is fed into a hopper on the shaft over the center of the

pan, and is distributed around the circumference of the pan through curved tees on the ends of pipes radiating outwards from this hopper. A number of rake arms also radiate from the shaft and keep the bed in the pan open. The feed-pipes and rakes are carried slowly around the pan by means of pawls, which catch in ratchet-teeth in the edge of the pan at the end of each forward stroke and are carried back with it on the back stroke. The heavier particles of ore work along the bottom of the pan to the outside and down through the annular gutter to the front of the machine, opposite the discharge gate. The lighter mineral is gradually forced back up the slope and into the discharge hopper at the center. The constant shaking makes it necessary that these concentrators be set up very carefully and firmly or they will soon shake to pieces.

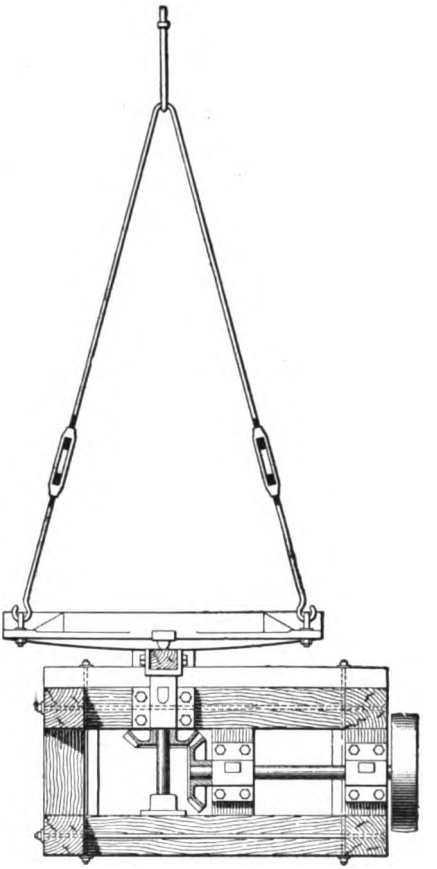

FIG. 83.

150. Duncan Concentrator.—The Duncan concentrator consists of a pan somewhat similar to that of the Hendy, but revolving at the rate of 8½ revolutions a minute; the friction of the pan causes the pulp to make about 3 revolutions a minute in the pan, thus keeping the lighter particles

in suspension. The mineral settles towards the rim of the pan where the concentrates are drawn off, while the light gangue matter remains more or less in suspension and is carried off at the center by the tailings stream. These machines are suitable only for the separation of coarse sulphides from a light gangue mineral, and very few of them are now in use.

151. Log Washer.—When ores contain a greater or less amount of clay, they require washing, and this can be

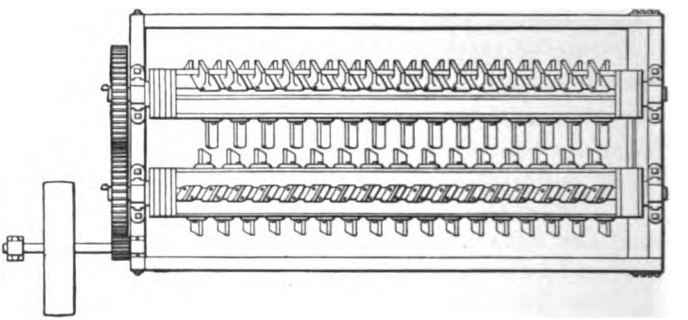

FIG. 84.

accomplished by means of a log washer or trough washer. The log washer, as its name indicates, consisted originally of a log having spoons or blades placed in a spiral about its length. The log is now made of a piece of cast-iron pipe and is placed over a trough, the ore being fed into the trough and a current of water employed, which would, without the introduction of the log, have washed the ore down through the trough, but by running the log the ore is fed up-stream against the water by means of the spiral blades or spoons. In this way the clay is broken up and washed away, while the ore is forced out at the upper end of the trough. Fig. 84 is a plan of a double log washer, in which there are two logs situated side by side and driven by the same gearing. Fig. 85 is an end view of the same plant.

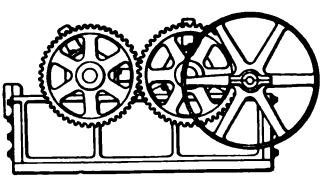

FIG. 85.

AMALGAMATION.

PROPERTIES OF MERCURY.—AMALGAMATION.

152. Mercury (quicksilver) rapidly dissolves gold at ordinary temperatures, forming an amalgam which is liquid, pasty, or solid, according to the proportion of mercury. An amalgam containing 90 per cent. of mercury is liquid, while one containing 85 per cent. crystallizes in yellowish-white prisms. Silver, and also many of the base metals, as copper, lead, and zinc, are likewise soluble in mercury, and any or all of these metals can exist in an amalgam at the same time as gold. The excess of mercury in a liquid amalgam may be strained off through cloth or buckskin, leaving the hard, dry amalgam behind. The mercury from an amalgam may be distilled off by heating—applying at first a gentle heat, and gradually increasing it; if the heat is stopped at any point, the distillation ceases, but recommences if the heat is again raised; at a bright-red heat all but a mere trace of the mercury is expelled, and if the heating has been gradual, the vaporized mercury carries off but little of the precious metals with it. A piece of gold readily absorbs mercury and becomes brittle, this brittleness sometimes remaining after the mercury has been volatilized by heat. The fumes of volatilized mercury are exceedingly poisonous, producing serious salivation if breathed even in comparatively small quantities; hence the distillation should always be performed in strong, hermetically sealed retorts, the fumes being recondensed by passing through a water-cooled condensing tube or coil.

The amalgamating property of mercury, together with the ease with which it can be again separated from the amalgamated metals by distillation, recondensed, and used over and over, makes it a very important factor in the metallurgy of gold and silver, particularly the former. Amalgamation is one of the principal processes of recovering free gold and silver from their ores. The ore is crushed up fine enough to free the metals from their gangue, and

the pulp, mixed with water, is passed over copper plates which have been coated by quicksilver, or over a bath of liquid mercury; or the gold and silver may be amalgamated by grinding the ore or pulp together with mercury, in machines like the arrastra, amalgamating pan, and Huntington mill, or the mortar of a stamp-mill. Mercury is also used in placer mining, being thrown into the sluices to catch fine gold, which might otherwise be carried on down the sluice by the swift current and be lost. Chloride of silver is also soluble in mercury, and in the case of silver ores in which the silver is present as a non-amalgamable compound, the ores are crushed, roasted with common salt to bring the silver into the form of a chloride, if it is not already in that form, and the chloridized ore, mixed with warm water, is introduced into cast-iron pans, around which revolving arms carry mullers or mixers; a little clean mercury is put in the pan and amalgamates the silver chloride, the mullers insuring the contact of all the ore with the mercury.

In America, mercury is sold in "flasks" containing 76½ pounds; the Australian "bottle" of mercury contains 75 pounds of the metal.

IMPURITIES. — LOSSES OF MERCURY.

153. The mercury used for amalgamation should be as free as possible from base metals. A little gold or silver in the mercury is a decided advantage in amalgamation, as mercury containing a trace of gold or silver amalgamates much more rapidly than perfectly pure mercury; this advantage is so marked that, when a new lot of mercury is received at a mill, it is either mixed with old mercury that has been strained off of amalgam and always retains a little gold and silver, or, if there is no old mercury obtainable, as in starting a new mill, a little silver is dissolved in the new mercury. Copper plates are silver-plated for practically the same reason. The presence of base metals in the mercury, however, is attended with very serious results, which are described in the following article.

154. Sickening.—Mercury is said to be "sick" when it contains some substance which coats it with a film and prevents it from amalgamating the gold and silver. When the mercury becomes separated into fine drops, this film prevents their reuniting, and they are broken up finer and finer, and finally washed away with the tailings, the film preventing their catching on the apron plates. This is one of the principal sources of loss in gold and silver amalgamation. Sickening is caused by certain base metals and their compounds in the mercury. Lead, copper, tin, and zinc in mercury oxidize rapidly and cover the mercury with a film of their oxides. Lead and copper are the worst of these, because the most common. They also make the amalgam pasty, necessitating the use of inordinate quantities of mercury, and consequently increasing the loss. If an ore contains soluble salts of any of these metals, it is very apt to be unfit for amalgamation, at least by the ordinary methods, such as amalgamation in the stamp battery or pans, or on copper plates, as the iron and copper precipitate the metals from solution by galvanic action, and the precipitated metal is at once dissolved by the mercury, soon causing it to sicken. For this reason the old-fashioned stone arrastra is better suited to the working of some ores than the improved modern machinery.

Arsenic, antimony, and bismuth also cause a great deal of trouble. Whether they occur in the metallic form or as compounds, they are dissolved by the mercury, and then a black, crystalline coat of the metallic element forms on the surface of the mercury. Easily decomposable sulphides and sulphates reduce and form sulphide of mercury. This is the case with sulphides of arsenic, antimony, and bismuth, and more or less with the sulphides of lead, copper, and silver. Clean iron pyrites is not affected by mercury.

Sickening, when due to the formation of metallic oxides, may be remedied by the addition of a little sodium amalgam. This is prepared by adding metallic sodium, in pieces about the size of a pea, to a bath of mercury heated to about 300° F. Each piece of sodium causes a slight explosion and

a bright flash of flame. The reaction becomes less violent after about 3 per cent. of sodium have been added, and the amalgam is then poured into a shallow pan and allowed to cool, becoming solid when cold. It is then broken up and kept under naphtha, in closely stoppered bottles, to prevent oxidation. A little of this amalgam, added to a lot of sick quicksilver, will reduce the coating of oxide, the oxygen combining with the sodium and forming a soluble salt, while the metal is absorbed into the mass of the mercury, leaving the surface clean and lively. This will cure nearly all sickness of the quicksilver except that due to sulphides of antimony and bismuth, but is applicable only to pans, mercury wells, and riffles, and not to plate or battery amalgamation, where the mercury is in a thin film.

155. Flouring.—"Flouring" is the other main source of loss of mercury. The mercury is broken up by the machinery into very fine globules, and a film of air around each globule prevents their reuniting and floats them off in the waste water. If this film of air be broken in any way, the particles instantly unite; but a considerable proportion of the total mercury lost is lost in this way, particularly in stamp-milling. Flouring can be prevented to a considerable extent by passing the pulp through mercury wells or troughs, where the air films around the minute globules are broken by agitation and the globules unite with the mass of the mercury.

156. Other sources of mercury loss are the loss in retorting, which is unavoidable, and losses due to leakage, inefficient apparatus, and last, but not always least, losses due to careless and inefficient work. The total loss of mercury in stamp-milling usually varies from $\frac{1}{8}$ to 1 ounce per ton of ore treated, the average being about $\frac{1}{2}$ ounce.

LOSSES OF GOLD.

157. Float Gold.—Clean gold is readily amalgamated by mercury. Very fine particles of gold, however, may become surrounded by a film of air (like floured mercury),

which prevents their being amalgamated, and floats them away with the tailings. Finely divided pyrites are floated off in the same way, but can not be strictly considered as "float gold," although frequently no distinction is made. This floating away of gold and mineral is one of the chief sources of gold loss in gold milling.

158. Non-Amalgamable Gold. — Another large source of gold loss is in gold that is not directly amalgamable, being coated with or surrounded by some substance which prevents it coming in contact with the mercury. This includes gold in pyrites, "rusty" gold (gold surrounded by a film of some oxide or sulphide which prevents its amalgamation), greasy gold (the particles of gold being prevented from amalgamating by a film of greasy material), and gold in chemical combination, as tellurides.

159. *Gold in pyrites* is mostly, if not wholly, in the form of native gold in minute crystals in the cleavage planes of the pyrites. Some authorities claim that the non-amalgamable gold in pyrites is in the form of a sulphide, but the majority of the evidence is in favor of the native gold. Examined under a powerful microscope, the gold can always be seen in the cleavage planes and gilding the edges of the little streaks or striæ on the sides of the crystals marking the edges of the cleavage planes. By leaching with potassium cyanide, this gold can be dissolved out, leaving microscopic crevices between the cleavage faces and pitting the faces themselves. The crystals of gold are so minute that a large proportion of the gold remains with the pyrites, even when the ore is crushed very fine. The very finest slimes of pyrites, even when ground in pans with mercury, will seldom yield more than 40 per cent. of their gold by amalgamation. If the pyrite is oxidized, either by weathering or roasting, the proportion of amalgamable gold is considerably increased; but, on the other hand, a great deal of the gold is apt to become coated with a film of iron oxide, particularly when the pyrite is oxidized by weathering and is rendered unfit for amalgamation. The plan usually followed

with such ores is to save what gold is possible by amalgamation in the stamp battery and on the plates, and then concentrate the pyrites and extract the gold from them, either by smelting, or by chlorination or bromination. In the latter two processes, the pyrites are first roasted, to drive off the sulphur, and then moistened and treated in closed vats or barrels with chlorine gas or a solution of bromine. The action is very similar in both cases. The gold is brought into the form of a soluble chloride or bromide; this is leached out of the pulp by water, and the gold then precipitated, usually by ferrous sulphate (copperas), sulphureted hydrogen, or charcoal, and the precipitated gold is melted and molded into bars.

Even when concentration is employed, more or less pyrites is inevitably carried over with the tailings; but by careful work this loss can be reduced to a minimum.

160. *Rusty gold* is native gold the scales of which are coated with a thin film of some mineral substance which prevents them from amalgamating. The film is usually oxide of iron, silica, or some sulphide or arsenide. The films are frequently perfectly transparent, so that the gold appears to be perfectly clean and pure, and the existence of the film is indicated only by the failure of the gold to amalgamate. If the scale of gold be broken or cut so that the least surface of clean gold is exposed to the mercury, the scale will amalgamate at once, but otherwise it will be carried over with the tailings.

Roasting or calcination is a process usually beneficial in the case of rusty gold. Calcination is merely roasting to drive off water or decompose carbonates, and is so called only to distinguish from the oxidizing roasting to drive off sulphur and arsenic. If the coating of the gold scales is a sulphide or an arsenide, it is readily decomposed by an oxidizing roast. A calcining roast is frequently effective in treating limonite (hydrated iron oxide) gold ores, in which the particles of gold are coated with a film of the iron oxide. The heating drives off the water and causes the particles to

agglomerate, and leaves them open for amalgamation. Instances are known of ores which in the raw form would yield only from 30 to 40 per cent. of their gold by the most careful and elaborate amalgamation, but after calcining yielded 80 to 90 per cent. With ores of this type, however, it is usually advisable to employ some other process, such as chlorination or bromination.

161. When the gangue of an ore is talcose—i. e., like talc (soapstone)—the gold scales are apt to be coated with a slime which prevents their amalgamation and floats them off. A somewhat similar effect results when grease or oil gets into the ore. The scales of gold become coated with a thin film of grease—a condition known as *greasy gold*—and refuse to amalgamate. A very small quantity of grease will do the mischief—a little tallow from the miners' candles or a few drops of oil in the mortar or pan being sufficient to cause considerable loss and trouble. The effects of the grease may be counteracted by the use of a little potassium cyanide or caustic soda or potash in the water, to cut the grease.

162. Tellurides of gold are of a greasy, talcose nature, and are exceedingly difficult to amalgamate. They frequently contain free gold, but even this is apt to be coated and non-amalgamable. They may be rendered amalgamable by roasting, which volatilizes the tellurium; but the volatilized tellurium carries off with it a great deal of gold—altogether too much for practical working—so that amalgamation is practically out of the question for telluride ores. Chlorination and bromination are open to the same objection, as the ore has to be roasted preparatory to leaching, and even smelting is unsatisfactory, on account of the large gold loss by volatilization. In some cases the cyanide process, in which the gold is dissolved out of the ore by leaching with a very dilute solution of potassium cyanide, has given the best results on tellurium ores. There are so many factors entering into the case that it is impossible to make any general statement as to which is the best method for telluride ores.

163. Loss of Amalgam.—More or less gold is lost in the shape of finely divided particles of amalgam. This can be remedied by careful working, not allowing the amalgam to get too hard or to accumulate in too large quantities, and by placing amalgam savers below the apparatus, such as mercury wells, shaking copper plates, or the amalgam savers on vanners—vanners themselves would catch most of the fine amalgam, but as it would go in with the concentrates, the mercury in it would be lost; the amalgam saver is not expensive, in view of the saving it will accomplish. Amalgam savers will be described later.

AMALGAMATING APPARATUS.

PRIMITIVE AMALGAMATION.

164. The principle of amalgamation has been employed in the recovery of the precious metals for an indefinite period. There is ample evidence that it was used by the ancient Romans before the dawn of the Christian era. Many of the primitive machines are still used in localities inaccessible to transportation and where skilled labor is difficult to get—notably in the Spanish-American countries. In the inland portions of those countries, the methods of mining and milling are still used that were in vogue two or three centuries ago, the apparatus being identical with that used by the ancestors of the present inhabitants. Deep mines are found there from which the only exit is by means of notched poles, up which the Indian laborers climb, carrying the ore in skin bags strapped on their backs; and there too are found the Chilian mill and trapiche, the arrastra, and the patio, in their most primitive forms.

PRIMITIVE APPARATUS AND METHODS.

165. Chilian Mill.—The Chilian mill is sometimes used for amalgamation, but is essentially a crushing machine. As an amalgamator, it is neither as efficient nor as

economical as the arrastra. The original form of the mill has two heavy stone rollers running around in a pan built of stone. The rollers are carried on arms radiating from a central shaft of wood; this shaft is driven by a mule at the end of a long pole. The modern mill has been described in Art. **48.**

166. Trapiche.—The trapiche is even more primitive in its construction. It has only one roller, which is attached to the short arm of a long pole pivoted on a post in the center of the pan or basin, the mule being hitched to the long arm of the pole. These machines are very indifferent amalgamators, and the loss of mercury in them is large, so that they are used mostly for crushing ore preparatory to amalgamation in the arrastra and patio.

167. Arrastra.—The arrastra is similar in construction to the Chilian mill, except that, instead of stone rollers, flat stones, usually four in number, are dragged around the pan by the radial arms, to which they are fastened by ropes or chains. The front ends of these stones or mullers are raised a few inches from the floor by the suspending ropes or chains, insuring their riding on the ore and grinding it instead of merely plowing through it. The mullers weigh from 600 to 1,500 pounds each when new and are used till they wear down to about 400 or 500 pounds before renewing, and are then renewed one at a time, so that there are always old mullers in the pan. The arrastra is driven either by a mule at the end of a pole or mechanically, by water-power or steam. Fig. 86 shows a mule-power arrastra. Small portable arrastras with iron pans are made for prospecting purposes.

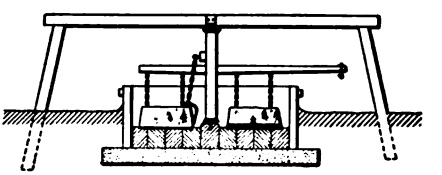

FIG. 86.

In many ways the arrastra is an ideal amalgamating machine, in spite of its crude construction, and on certain classes of ore it will save a larger proportion of the values

than the more modern machinery, notwithstanding the loss of mercury and amalgam through the stone bottom. If the gold is rusty, for instance, the grinding action is almost certain to break the film surrounding the scales and give the mercury a chance; and, again, in the case of ore containing easily reducible salts of lead, copper, or other base metals, as there is no metal about the machine with which the pulp comes in contact, there is no reducing action, and the metals remain in solution instead of reducing and sickening the mercury. As the ore is ground to an impalpable pulp, there is considerable flouring of mercury and amalgam, but subsequent settling and washing save a great deal of this.

The arrastra is too slow in its working to be applicable to any but very rich ores. The ordinary arrastra will grind from 800 to 1,500 pounds of ore in twenty-four hours, using about twice that amount of water in the pulp. About one ton is usually charged at a time in an ordinary arrastra. Enough mercury is added to have the amalgam contain not more than 20 per cent. of gold and silver. The mercury is usually amalgamated slightly with silver, copper, or zinc, both to keep it from breaking into globules and running into the crevices and to make it amalgamate more rapidly. In starting up an arrastra, about 5 or 10 pounds of mercury are added at once, and then about half a pound is added every other day. The amalgam is cleaned up at intervals, varying from twice a month in the rudest arrastras to twice or four times a year in those of the best construction. It is washed, with the addition of fresh mercury, then strained and retorted.

THE PATIO PROCESS.

168. In the **patio process** for the extraction of silver, the ore is first crushed in Chilian mills and then ground in the arrastra, where any free silver and gold, or other directly amalgamable forms of the metals, such as horn-silver (silver chloride), bromides and iodides of silver, etc., are extracted by amalgamation. The slimes from the arrastra

are then carried to settling pits, where the pulp is freed from surplus water, and from here are conveyed in the form of a liquid mud to the *patio*.

The **patio** is simply a court or enclosure, usually from ½ acre to 1½ acres in extent, which has been carefully graded and paved with stone, cement, asphalt, or even matchboards, made as nearly as possible impervious to mercury. The court has a slight inclination, so that the water readily drains off from the pulp beds. The pulp is brought on to the floor from the arrastra in a semifluid state and piled up in piles containing from 30 to 130 tons, and allowed to drain and dry for several days, dams of sand, wood, or stone being built around the pile to prevent it spreading all over the floor; in large works, permanent circular walls or dams are sometimes built for this purpose. The piles are about 1 foot thick and 20 to 50 feet in diameter. When it becomes stiff enough to work, it is spaded over thoroughly, and then from 2 to 5 per cent. of salt is scattered over its surface and worked in thoroughly by spading, and by mules or horses driven around in it. This operation of spading and treading the pile or *torta* is known as *repaso*.

After the salt is thoroughly worked in, the pile is once more spaded over and the *magistral* is added. The essential constituent of the magistral is copper sulphate. Magistral was formerly made by roasting copper pyrites, converting the sulphide to sulphate of copper, or by roasting together iron or aluminum sulphate and insoluble copper salts, converting the copper into sulphate, and spreading this over the torta. Of late years, however, it has become customary to leach the copper sulphate out of the roasted ore, crystallize it, and use it pure as magistral. The office of the magistral is to convert the non-amalgamable silver salts into an amalgamable form. The reaction is as follows: The copper sulphate reacts with the salt (sodium chloride), forming copper chloride and sodium sulphate. The copper chloride then reacts on the silver salts, forming chloride of silver, which is readily amalgamable. The copper sulphate of the magistral also reacts upon any soluble lead and zinc minerals in

the torta, converting them into insoluble forms, and thus preventing them from being reduced and sickening the mercury. The amount of magistral added is carefully proportioned to the character of the ore and its silver contents; any excess of magistral causes a loss of mercury. The proper proportion may be determined by the way the torta works. The magistral is spread over the surface of the torta, and another repaso made; and this is repeated every second or third day, about eight hours at a time, until the operation is finished. The chemical action of the magistral generates heat, and the proportion of magistral necessary is indicated by the temperature of the pile. If the pile gets too hot and steams, there is an excess of magistral and a loss of mercury; while if there is not enough magistral, the pile is too cold and the action slow. An excess of magistral may be corrected by the addition of a little finely ground ore containing oxide of copper, or by adding lime or wood-ashes to decompose the excess of copper chloride.

About 6 or 8 ounces of mercury are added to the torta for every ounce of silver it contains. Usually one-half to three-quarters of the total mercury is added at first, along with the magistral, and the remainder added in small quantities from time to time, always sprinkling through a strainer in order to get the mercury thoroughly distributed in as small globules as possible. The mercury is spaded in, a hot solution of copper sulphate added, and the pile trodden for 8 or 9 hours the first day, and again the next day, and then every second or third day until the pile is finished. The entire operation takes from 15 to 50 days, according to the weather, the amalgamation being much more rapid in warm, sunny weather than in dark, rainy weather. The average time is about 20 or 25 days.

When the tests of the pulp and amalgam show that the amalgamation is completed, a considerable excess of mercury is thrown in to thin the amalgam and catch floured mercury, and the treading is continued for a while longer. The pulp and amalgam are then washed, usually in very

primitive box settlers built of stone or equally primitive tubs or pans. The pulp is kept in motion in the settlers by men dancing and wading in the water. The tailings from the settlers are further concentrated on inclined planes of masonry. The amalgam from the settlers is collected, strained, and retorted.

The losses in the patio process are very high. There is always a loss of mercury of at least 1 ounce for every ounce of silver in the pulp, and usually more, and even the best work seldom saves more than 60 or 65 per cent of the silver. The system is only applicable to fairly rich ores, in remote regions, where labor is very cheap and machinery very expensive and difficult to obtain.

169. Primitive Amalgamating Pans.—Other primitive amalgamating machines are the *cazo*, *fondon*, and *tina*, all of which are still used, both alone and in connection with the patio process. They are really primitive forms of the amalgamating pan described farther on, and are links in the chain of its evolution from the arrastra.

170. The **cazo** is a round pan or tub, about 1 meter (39.37 inches) in diameter, made entirely of copper, or of wood or stone, with a copper bottom. This is set over a rude fireplace, the thin pulp with 5 to 15 per cent. of salt added, and the mixture brought to a boil; the mercury is added as soon as the salt is dissolved, and a man stirs the pulp with a piece of wood, rubbing the bottom to keep it clean of amalgam and assist in the amalgamation of the rich silver minerals.

171. The **fondon** is a form of the cazo, but much larger, being about 7 feet in diameter, and the mulling is done by two copper mullers revolving about a spindle in the center of the pan. If the mercury is added carefully and the mullers kept moving at the proper speed, the amalgam will not cling to the copper bottom and mullers of the fondon.

172. The **tina** is even more like the modern amalgamating pan; in fact, it is practically identical with it, except that the bottom and mullers are of copper instead of cast iron and wood, and are operated by a bevel-gearing above instead of from beneath. The operation is the same as that of the fondon and cazo. These machines are suited only to very rich, easily amalgamable silver ores, such as chlorides, bromides, and iodides of silver.

MODERN AMALGAMATING MACHINERY.

AMALGAMATING PAN.

173. The amalgamating pan is an adaptation of the principle of the arrastra to the requirements of modern metallurgy. The prospecting arrastra previously mentioned is really a crude amalgamation pan, a connecting-link between the arrastra and the modern pan. The amalgamating pan is essentially a cast-iron pan in which the pulp is ground and amalgamated by means of mullers of cast iron traveling about a vertical shaft or spindle, passing up through a hollow cone in the middle of the pan, and driven by bevel-gears underneath. The grinding faces are replaceable. The bottom, or muller path, is made up of a series of dies, which fit together to form a closed ring, the joints between them being filled in with hardwood strips. They are usually held in place by dovetail lugs on the lower side, which set into corresponding grooves in the bottom of the pan and tighten automatically, the lugs and grooves being narrower at the end towards which the dies are drawn by the motion of the muller, or they may be bolted down. The muller shoes are usually fastened into the muller ring in the same manner, but with the narrow ends of the slots in the opposite direction, so that the forward motion of the muller tightens both the shoes and dies in their places, while a reversal of the motion will loosen them when for any reason it is desired to remove them. The muller ring is a

wide, horizontal flange on the bottom of the hollow cone or hub on the driving spindle, through which the motion of the spindle is transmitted to the muller.

The muller must be attached to the spindle in such a manner that it can be readily raised from the dies without throwing the machine out of gear while charging the pan or while amalgamating, when a stirring action only is desired. The different methods of suspension are described farther on.

A great deal of the iron is cut out from the sides of the driving cone, both to lighten it and to permit communication between the inside and outside of the cone above the mullers. A number of wings of iron or of amalgamated copper, usually something in the shape of inverted plowshares, are set around the sides of the pan, above the level of the mullers, and deflect the pulp inwards and downwards as it rises towards the rim of the pan by centrifugal force, carrying it in through the openings in the muller cone and under the muller again and again, till it is all thoroughly reduced and amalgamated. In the Stevenson pan, curved mold-boards, which guide the pulp upwards and inwards, on the principle of a screw, are used instead of wings.

The pans are made either entirely of iron or with a cast-iron bottom and wooden-stave sides, bound together by iron hoops; the latter form is used more particularly in the working of strongly acid ores or roasted sulphide ores, which would corrode iron pans. The pans are usually about 5 feet in diameter and 2½ to 3½ feet deep. The shoes used in the different pans vary considerably in shape, size, and number. The minimum number is three; the maximum, twelve. They are usually from 2 to 3 inches thick, and are so designed as to draw the pulp under.

174. The pulp in the pans is sometimes heated up nearly to boiling-point (to about 200° F.), the heat being supposed to assist greatly in amalgamation. The heating is done either by passing live steam directly into the pulp or by exhaust steam in a space between the bottom of the

pan and a false or steam bottom. The sides, too, of iron pans are sometimes jacketed. The use of steam passed directly into the pulp is gaining popularity in the later models, as it accomplishes the heating so much more rapidly. It is, however, open to some objections, which are made the most of by the advocates of the other system. In the first place, it requires the use of live steam right from the boilers, as exhaust steam always contains more or less oil, and grease of any sort in the pulp will cause a great deal of trouble. The second objection, which, to tell the truth, is not a very serious one, is that the water from the condensation of the steam thins the pulp and makes it too thin to work properly. The use of jackets allows of the utilization of waste steam for the heating, but it is rather slow and unsatisfactory in its operation. A compromise between the two methods is a good idea, the pulp being brought up to the proper temperature by direct steam, and maintained there by the heat from the exhaust steam in the false bottom and steam jackets, if the latter are used. When live steam is used, the pans should be closely covered with a cover of cast iron or wood, the steam being introduced through a hole in the top. Covers are useful in any case, as they retain the heat and prevent splashing.

175. There are a number of different forms of pans in use, though the idea is the same in all. The pan is essentially an amalgamating machine, not a crusher, and the grinding action should be of secondary importance. By far the greater part of the wear on the machine arises from the grinding, and for this reason it is advisable to crush the ore as fine as practicable before it enters the pan. Moreover, the longer the pulp has to be ground, the greater is the loss of mercury from flouring. In some mills the ore is ground or crushed to the desired fineness before entering the amalgamating pans, either by the ordinary crushing apparatus or, as in the Boss process, in special grinding pans; in such a case, the iron shoes in the amalgamating pans may be replaced by wooden ones.

Pans were formerly made with conical bottoms, with the idea that they required less power, but this construction is now practically abandoned, as it has been proved that, for the work done, the conical-bottomed pan requires as much power as the flat-bottomed pan, and that flat bottoms wear more evenly, and consequently longer, than conical bottoms, and are more easily repaired. When the sides of the pan are of wood, the bottom is usually cast with a rim inside of the staves, against which they are drawn very tightly to prevent leakage of mercury and amalgam, and the pan is sometimes also covered on the outside with a tight casing of sheet iron. The pans discharge at the bottom. A common and convenient scheme is to have the discharge through a flexible hose, which can be tied up against the side of the pan when not in use. In some mills the mercury and amalgam are withdrawn by themselves into an amalgam kettle, and the pulp is then discharged into the settlers; in others, the entire contents of the pan are conveyed at once into the settlers, and all the amalgam and mercury collected there. With most flat-bottomed pans there are always 50 or 60 pounds of mercury left in the bottom of the pan; but this is really an advantage rather than a disadvantage, as the mercury is not lost, but is utilized in the next charge, and the silver and gold it may contain make it amalgamate more readily and alloy any new mercury which may be put in the pan.

176. The **Wheeler** pan, though one of the oldest forms, is still quite extensively used. The general details of the construction are the same as those previously given in the general description; the method of suspension, however, differs somewhat. The pan is shown in section in Fig. 87. The upper portion of the spindle *g* is threaded, and a corresponding thread is cut in the muller nut *n*, so that it can be screwed up or down on the spindle when cleaning up, putting in new shoes, etc. A keyway cut in the muller nut receives a key which locks the muller at any desired height on the spindle. The position of the muller

on the spindle is only altered when a large movement is required, as when the muller must be raised above the top of the pan, in cleaning up or in order to change shoes or dies. All small alterations in the height of the muller, such as raising it from the dies when charging or amalgamating, are made by means of a hand-wheel *h* on a vertical rod *r* at one side of the pan; the rod *r* connects with one end of a bent lever *l*, underneath the pan, the other end of the lever being suspended from the frame of the pan. The lever passes under the center of the pan and forms the support for a pin *p*, which in turn supports the lower bearing of the spindle *g*. The bevel gear-wheel on the spindle is attached in such a manner as to allow the spindle a slight vertical displacement without affecting the gears, and the shaft and muller can be raised or lowered as desired by screwing the hand-wheel to the right or left, respectively.

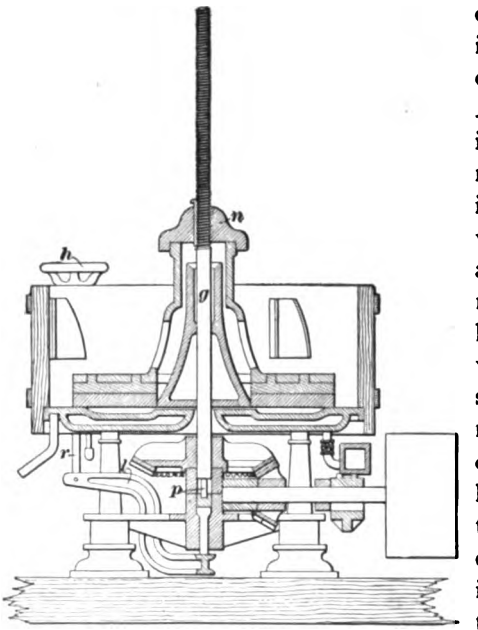

FIG. 87.

The sides of the pan are variously made of cast or wrought iron or wood; in the latter case, the bottom is let slightly into the sides. The pan has a double, or steam, bottom for heating the pulp. The shoes are from 6 to 12 in number, and are wedged into the muller plate with wooden wedges. The dies, 4 to 12 in number, are in the shape of sectors of a circle, and are fastened in the bottom of the pan by dovetail wedge joints; the radial spaces between the

dies are usually filled in with strips of hardwood. The shoes and dies usually last from 3 to 6 weeks. Very hard dies may last considerably longer, particularly with good care, but many millmen prefer rather softer shoes and dies, made of a mixture of equal parts of white and soft iron. The space left between the muller and the sides of the pan is considerably larger than in most of the other pans.

177. The **Varney** pan is somewhat similar in construction to the Wheeler. The shoes, however, are much larger and of a peculiar spiral outline, and the shoes and dies are bolted to the muller and the bottom of the pan, respectively, making them rather inconvenient to insert and remove. The suspension of the muller also differs somewhat from that employed in the Wheeler pan. The muller is merely keyed firmly on the spindle, and not threaded on, and when for any reason it is desired to raise it any considerable distance from the dies, the key must be loosened and the muller raised by overhead tackle. Any small vertical movement of the muller, however, is accomplished by the hand-wheel and lever underneath the pan, as in the Wheeler pan. The pulp is heated by direct steam, there being no steam bottom or jacketing. The guide wings are not attached to the sides of the pan, but are suspended from rods passing through the wooden cover of the pan and through cast-iron sleeves bolted to it, and are raised and lowered by means of hand-wheels threaded on the upper portion of the rods. The cover is bolted to a flange on the rim of the pan when the machine is in operation.

178. The **Horn, Greeley, Patton,** and **McCone** pans are all double-bottom pans, and differ essentially from the Wheeler pan only in the method of suspension of the muller, which is the same in all. The muller ring and the suspending cone or driver are cast separately, and either bolted or wedged together in the different pans. The shoes and dies are held in place by self-tightening wedge joints. The apparatus for raising or lowering the muller is all above the pan, as shown in the illustration of the McCone pan,

Fig. 88. It consists of a vertical screw *a*, turned by a hand-wheel at the top. The lower end of this screw rests upon the top of the driving spindle, and a thread is cut on the inside of the muller nut *b*, corresponding to that on the screw, and the muller is raised and lowered by turning the wheel. The muller is free to slide up and down on the spindle, but is caused to rotate with it by a vertical key fixed in the spindle and working freely in a slot in the muller hub *c*. The muller in the Horn and Patton pans is not fastened tightly to the driving cone or hub, but is caught in grooves, so that it tightens when the driver is turned forwards, and is loosened when the motion is reversed, and can be readily detached from the driver. All these pans differ more or less from one another in unimportant details, such as the shape of the false bottom and muller, the shape, weight, and number of the shoes, etc., the difference being in many instances barely sufficient to characterize the pan. The **Fountain** and **Stevenson** pans dispense with the ordinary guide wings, having instead flaring lips on the muller which guide the pulp downwards through radial slots in the plate beneath the lips. A similar device is sometimes used on the McCone pan.

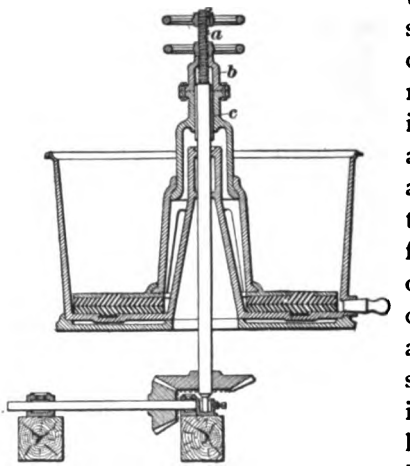

FIG. 88.

179. A method of suspending the muller sometimes used is similar to that on the Wheeler pan, except that, instead of keying the muller at the desired height on the spindle, it is locked in position by a hand-wheel threaded on to the upper portion of the spindle and screwed firmly down

on the muller nut when the latter is in the desired position. The muller nut is made as a hand-wheel, for convenience in raising and lowering the muller.

180. The **Boss** pan, used in the Boss continuous process, presents some characteristic features. One of the most

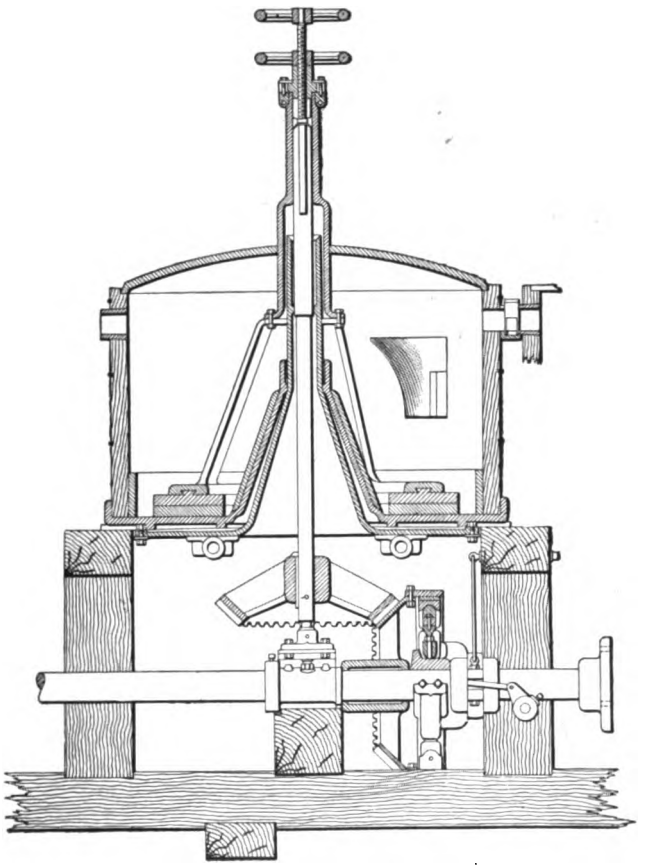

FIG. 89.

important of these is the extension of the steam bottom up into the central cone of the pan, as shown in Fig. 89, thus greatly increasing the heating surface. The cone of the false bottom is extended up beyond the top of the main-

bottom cone, and forms the sleeve and upper bearing of the spindle. A rust joint is made between the two cones. The steam enters on one side of the bottom and exhausts on the other, and is regulated by a horizontal valve operated by a hand-wheel on a rod extending out to the side of the pan. The pans are set in series, the pulp flowing from one to the other, and the driving shafts of the entire series are coupled together and driven as a whole; and any pan in the series can be thrown in or out of gear by a friction-clutch without disturbing the rest. The friction ring which the clutch engages is cast separately from the driving bevel-gear and bolted to it, so that it can be replaced independently when worn out or broken. The step bearing of the spindle is carried on a bracket cast on the driving-shaft box in such a way as to allow the removal of the shaft without disturbing the spindle. The mercury bowl in front of the pan (see Fig. 90) has a siphon arrangement, by means of which the pan may be readily drained of amalgam and pulp, if desired.

181. Chemicals.—In the early days of pan amalgamation, all sorts of mixtures were employed in pans, with the idea of assisting the operation. These nostrums were mostly harmless, but some of them were highly ridiculous, and nearly all of them absolutely useless. They were hit upon with about the same authority as the "charms" of a negro "voodoo doctor"; and once an old-time millman conceived the idea that tobacco juice, sage tea, or some other equally nonsensical substance was an aid to amalgamation; it was as difficult to shake his faith in it as it is to undermine that of a superstitious negro in his "charm." However, new blood and modern education have now almost completely displaced this class of "rule-of-thumb" metallurgists, and out of all the motley collection of nostrums formerly used, only those remain whose chemical reactions are known and which are used to obtain definite effects. Thus, salt and "bluestone" (sulphate of copper) are always used, for exactly the same reasons as they are employed in the patio process. Lime is used to counteract the sickening

effect on the mercury of too much acid in the water; dilute sulphuric acid is used when the ores are too strongly basic; lye and potassium cyanide and niter are used to cut grease, and cyanide and niter to clean rusty scales of gold and silver. Sodium amalgam is used, as in all processes of amalgamation, to clean and enliven sickened mercury.

182. Charging.—While charging the pan, it is customary to raise the muller about ½ inch from the dies, and use it at first merely as a stirrer or mixer. If the charge is of dry-crushed or roasted ore, water is first run into the pan until the muller is covered. The muller is then started up, running at a speed varying, in different mills and with different pans, from 60 to 90 revolutions per minute, and the ore is then dumped or shoveled in. *The muller must be in motion while charging*, or the ore will pack on it and hold it down, and it will either be impossible to start it or the force required will be so great that there will be considerable risk of breaking the machine. The charge varies from 800 or 1,000 pounds, in the old-type Wheeler and Varney pans, to 4,500 pounds or even more in large pans treating slimes. Modern practice favors the use of pans of large capacity, as they do nearly, if not fully, as good work as the smaller pans, require but little more time to grind and amalgamate the charge, and the additional power necessary to drive them is small in proportion to the increased capacity.

The pulp in the pan, when the charging is finished, is about the consistency of batter, and fills the pan about half full. The motion of the muller causes the pulp to rise nearly to the top of the rim of the pan, sloping inwards towards the center, and the guide wings or mold-boards, as the case may be, throw it back again to the center. As soon as the charge is all in, the muller is lowered until the shoes and dies almost touch, and the ore is ground to a fine pulp. The grinding usually requires from 1 hour to 1½ hours, the end of the operation being recognized by the feeling of the pulp when rubbed between the thumb and finger. Rebellious ores sometimes require as long as 4 hours. Towards the end of

the grinding, steam is turned into the pan or into the steam bottom, as the case may be, and the charge brought up to the proper temperature, about 200° F., and this temperature is maintained throughout the amalgamating operation.

To obtain the best results in grinding, the pulp should be moderately thin, while the best amalgamation is obtained with the pulp somewhat thicker—about the consistency of honey. The pulp, for good amalgamation, will thicken up sufficiently during the grinding if not made too thin at the start.

183. Charging the Mercury.—There seems to be no general rules for the addition of the mercury, either as to the amount or as to the time of addition. The charge of mercury is usually a fixed weight per pan, the amount varying in different mills from 100 to 350 pounds per ton of ore in the charge; as a rule, the greater the capacity of the pan, the smaller the proportion of quicksilver required. In some mills, indeed, the amount of quicksilver added is proportioned to the amount of silver in the ore, which is determined by assay; but even these rules are empirical and applicable only in the practice of these particular mills. The addition of mercury is generally made after the grinding is completed, and the muller is raised from the dies during the amalgamation. Occasionally, a mill will be found where the mercury is charged and ground with the ore, but this is extremely bad practice under ordinary circumstances, as it does not appreciably increase the amalgamation, and it causes excessive flouring and loss of mercury and amalgam. The mercury may be all added at once, or a part of it reserved till the amalgamation is completed, and then added to thin and collect the amalgam.

The mercury is scattered over the top of the charge, through a strainer of cloth over the top of the flask, or poured from the flask between the closed fingers, or in some mills it is squeezed through canvas—the object in all cases being to break it up into very fine globules. Under no circumstances should the mercury be merely poured into the

pan; as is sometimes done. The motion of the pulp and the muller further breaks up the mercury, the thick pulp holding the minute globules in suspension, and they gradually circulate throughout the entire charge, amalgamating all the gold and silver they meet. The amalgamation usually requires from 4 to 5 hours; the additional saving from lengthening this period seldom compensates for the loss of time. The entire time of the ore in the pan is usually from 4 to 6 hours; in some cases it runs as high as 8 hours.

184. Charging the Chemical Reagents. — The essential chemical reagents—salt and bluestone—are charged at different periods in the operations in different mills, and in quantities varying with the character of the ore. The amount of each reagent necessary must be determined by experiment. The charge of bluestone seldom runs higher than 4 pounds per ton of ore; the salt is about twice or three times as much. They may be added with the mercury or at any time previous. Some millmen charge the salt and bluestone with the ore; others charge the salt with the ore, and the bluestone at some time during the grinding; there is no fixed rule, and the time of the addition seems to make very little difference with the amalgamation. The longer the chemicals are in the pan, the greater will be the corrosion of the ironwork — a strong argument for postponing their addition till towards the end of the grinding operation, when there will still be plenty of time for their chemical action on the ore.

In combination mills, working ores containing both gold and silver in amalgamable form, and amalgamating both metals in the pans, the mercury is allowed sufficient time to amalgamate the gold before the addition of the bluestone, as the latter hinders rather than aids the amalgamation of gold, though it is practically indispensable in the amalgamation of silver minerals.

The *auxiliary* reagents—lime, cyanide, sodium amalgam, etc.—are added as required. When the character of an ore requires the constant use of any of these reagents in definite

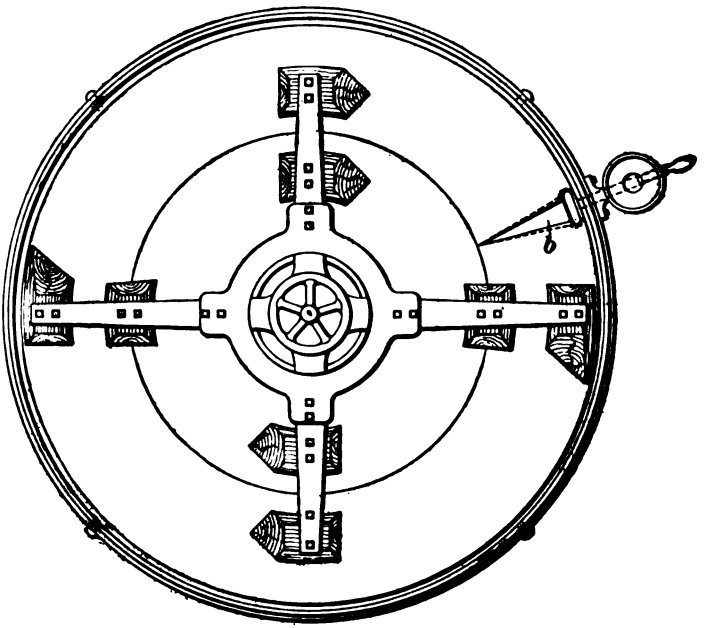

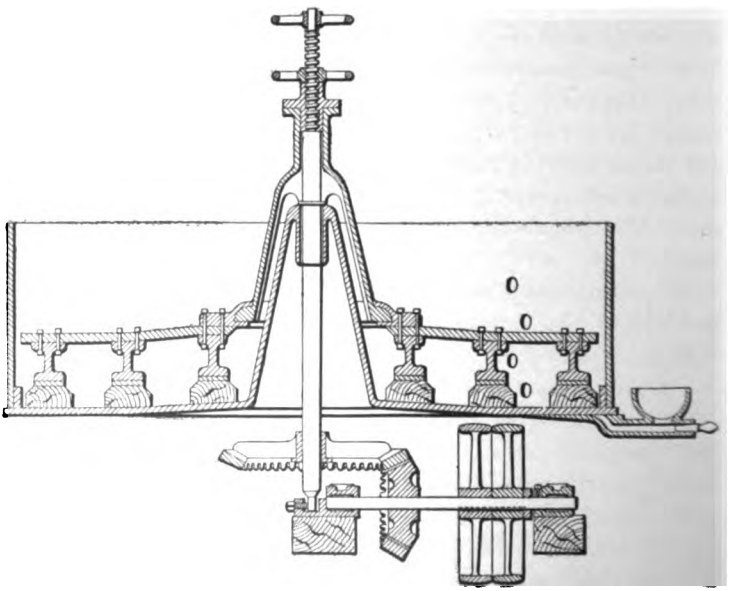

FIG. 90.

quantities, they may be made up into a stock mixture or solution with the salt and bluestone, to save time and trouble. The quantities used are, relatively to the size of the charge, usually very small—a few pounds to the ton of ore being sufficient, in most cases, to produce the desired result.

185. When the amalgamation in the pans is completed, the speed of the mullers is usually reduced to about 40 revolutions per minute, the steam shut off from the pans, if it is on, and the pulp thinned with water to cool it and allow the suspended globules of mercury and amalgam to settle. They are run for 15 or 20 minutes in this way, and then the mullers are stopped and the pans drained into the settlers. The amalgam in the bottom of the pans may either be withdrawn separately or the entire contents of the pans may be run into the settlers, where the mercury and amalgam remaining in suspension are settled out.

186. Settlers.—The settlers used for this purpose are merely large tubs of wood or iron—or with a cast-iron bottom and wooden or sheet-iron sides—usually 7 or 8 or even 10 feet in diameter, in which the thinned pulp is slowly stirred by stirrers resembling the mullers of amalgamating pans. The whole construction of settlers, indeed, is quite similar to that of amalgamating pans, except that, as no grinding is required, the shoes on the stirrer are usually made of wood, and no dies are used on the bottom of the pan. The general construction of the settler is also considerably lighter than that of the amalgamating pan, as the speed of the stirrers and the resistance of the pulp are both very much decreased.

The stirrer usually has four radial arms, on which the shoes are arranged as in Fig. 90; the path of each shoe on the short arms thus lies between the paths of two other shoes on the long arms, and the width of the shoes being equal to the width of the spaces, the entire bottom of the pan comes under the action of the shoes, up to the base of the central cone. The stirrer is hung like the muller of an

amalgamating pan, and is raised and lowered by a hand-wheel. The shoes never quite touch the bottom, but are worked to within ¼ inch or less of it, and the currents set up by them keep the pulp from packing on the bottom.

Settlers vary much less in the essential details of construction than amalgamating pans; in fact, most of the ordinary forms are practically identical in construction, the only radical departure from the construction here described being in the case of the Boss settler, which is used with the Boss continuous process, and is described farther on.

187. The pulp is discharged from ordinary settlers through a number of orifices in the side of the pan at different levels (see Fig. 90), the lowest being about 8 inches above the bottom of the pan; these are closed by wooden plugs, and are opened one at a time, beginning with the top one. The pulp is thus discharged by layers, and the lower portion is undisturbed by the drawing off of the upper portion, so that settling and discharge can be going on at the same time, thus saving considerable time in the entire operation. The discharge holes are best placed on an incline down the side of the pan, and not one directly beneath another, so that the lower plugs will not become covered with the slime from those above. The bottom of the settler is usually raised slightly towards the center, and a groove *b* conducts the amalgam into the mercury bowl in front of the pan, from which it can be dipped or siphoned as desired. In some of the later designs a small bowl or hollow in the bottom of the pan, near the side, replaces the outside mercury bowl, and the amalgam discharges automatically, through an inverted siphon, as fast as it forms. The excess of mercury in the amalgam is strained off and returned to the pans.

188. The pulp is ordinarily discharged from the settler through the side holes alone, leaving about 8 inches, more or less, of the heavier sand and pulp packed in the bottom of the pan; and the next charge from the amalgamation pans is turned right in on top of this. In starting the

stirrer on a new charge, it is raised so that the shoes are at about the level of the lowest side hole, just clearing the top of the packed sand from the previous charge, and is run in this position for about half an hour before adding any water, in order to get the heavy sand into suspension; or water may be added slowly, in a series of fine jets, about 1 inch apart, from the under side of a pipe extending radially from side to center of the pan. The stirrer is then gradually lowered, reaching its lowest position about 2 hours after starting. The addition of water through the jets is continued meanwhile, and is kept up until the contents of the pan are within about 6 inches of the top, when it is shut off. The stirrer is run in its lowest position from 1 to 3½ hours with the pan full; the top plug is then removed and clean water allowed to flow through the hole for about half an hour; then the next plug below is removed, and so on, the stirring continuing all the while. The entire time consumed in the settling is gauged to correspond with that required for the amalgamation, so that neither the pans nor the settler will be obliged to stand idle, waiting for one another. Each settler usually handles the pulp from two pans, though sometimes a single small settler is used for each pan.

189. Once a week the settlers are completely drained through a hole in the bottom of the mercury well, and all the amalgam carefully collected in an iron vessel and washed. In this time from 300 to 400 pounds of mercury and amalgam will have collected, unless a continuous siphon discharge is used.

The amount of water used in the settlers should be carefully regulated, for if the pulp is too thick the mercury will not settle completely, and if it is too thin the coarser sand will settle along with the mercury and prevent the globules from uniting. Beyond a certain point all further addition of water is useless, as at this point the mercury separates as readily from the pulp as it would if the pulp were thinner, and any further addition of water only thins

the pulp unnecessarily. With ordinary care, the settler is not apt to clog; if, however, the sand shows a decided tendency to pack on the bottom, the settler should immediately be cleared, to avoid any risk of breaking the apparatus.

190. Agitators.—The pulp from the settlers is sometimes run into still other settlers, called *agitators* or *dolly tubs*. These are simply large wooden tubs, from 8 to 20 feet in diameter and from 2½ to 4 feet deep, with four radial arms, hung and driven like the arms of a settler, revolving about in the tub at the rate of from 10 to 20 revolutions a minute. Each of the arms carries from six to eight vertical wooden staves, reaching nearly to the bottom of the tub, and these keep the pulp in a state of gentle agitation, allowing the fine shots of mercury and the coarse sand to settle. A constant stream of water is kept running through the agitator. Every three or four days the accumulated material is shoveled out and worked over in pans. One agitator will handle the pulp for five or six settlers. These agitators are now seldom used, having given way to modern concentrators or to various modifications of the ordinary settlers.

191. A few years back it was customary to build long blanket sluices below the agitator, through which the tailings from the agitator were run. These sluices resembled the undercurrents used in hydraulic mining. They usually consisted of a number of shallow troughs, 18 to 20 inches wide and 2 or 3 inches deep, placed side by side, on a grade of from 6 to 10 inches in 12 feet, and varying in length from 75 to 1,700 or 1,800 feet. The bottoms of the sluices were covered with blankets, tarred on the under side to prevent their rotting; or, in the short sluices, riffle bars were sometimes used. The sluices were cleaned at intervals, either by sweeping or by removing the blankets and washing them. Both blanket sluices and agitators have of late years given way almost entirely to improved modern slime washers, such as buddles and vanners.

192. Boss Continuous Process.—The Boss continuous process for the amalgamation of silver ores is a comparatively new process, but is bound in time to supersede all the older processes, on account of its cleanliness and mechanical advantages. The adoption of the Boss system also obviates the necessity of a considerable portion of the hand labor ordinarily required about a mill. The operation is entirely continuous, and, except where the ore requires roasting, it need not be handled from the time it is fed into the stamps until the settled mineral and amalgam are cleaned out of the settlers. When the ore is roasted, the pulp from the stamps (crushed dry) is conveyed to a roasting furnace, and from there to the cooling floor, where it is spread out and allowed to cool before charging into the grinding pans, in which the ore is mixed with water and ground to the proper fineness before entering the amalgamating pans. Fig. 97 shows a Boss-process mill in section.

193. The **grinding pans** are small iron pans, 4 feet in diameter and 1 foot 4 inches deep, constructed somewhat similarly to the grinding and amalgamating pans previously described. The driving arrangement is the same as that used on the Boss amalgamating pans, with this exception: there is a compressed spring in a sleeve around the muller nut, which keeps the adjusting screw pressed down firmly on the spindles.

The muller ring and driving cone are cast in one piece. The ring is a flat, vertical rim, connected to the cone by horizontal spokes, and the shoe is bolted to lugs projecting outwards from the sides of the rim, opposite the ends of the spokes. The upper edge of the rim is turned inwards at right angles, forming a flat, horizontal flange, or lip, about 5 inches wide. The shoes and dies are both solid, flat rings, but have oblique slots on their inner edges, extending a short distance into the rings, in order to get the same effect of suction that is obtained when the shoes are in segments, with oblique slots between them. The pulp is fed into the muller ring, and is obliged to pass

under the muller in order to get to the outside of the pan, since the joint between the muller ring and the shoe is made water-tight by a rubber gasket, and the flange at the top of the ring prevents the pulp from splashing over the sides, and turns it back to the middle of the pan. Grinders are usually placed in pairs, two for each ten stamps, one being set slightly lower than the other. The pulp from the entire ten stamps passes into the first pan, where it is ground; thence it passes on into the second pan, where it is still further ground; from here it discharges into the first amalgamators—or in some mills into a *chemical mixer*, which is interposed between the grinders and the amalgamators, and in which the chemicals are mixed with the ore before it enters the pans. This chemical mixer is described in Art. **196.** The grinding pans are on a higher level than the amalgamators, and behind them, and are driven by friction-clutches on a separate shaft, the clutches being thrown in and out of gear by levers operated from the pan floor.

194. The **amalgamating pans** used in the Boss process are described in Art. **180.** The number of pans in the series depends both on the capacity of the mill and on the character of the ore. Thus, the greater the capacity of the mill, the larger must be the number of pans in the series, since the ore must be in the pans a certain length of time in order to obtain a good percentage of amalgamation. As the operation of the mill is perfectly continuous, and all of the pulp has to pass through every one of the pans in the series, the greater the quantity of pulp the less time it will be in each pan; consequently, if the amount of ore handled by the mill is increased, the number of pans in the series must be increased proportionately, in order to have the material exposed to the action of the mercury for the proper length of time. Or, again, if one ore amalgamates more readily than another, it will require less time in the amalgamating pans, and allowing both ores the same time in each pan, the first would require fewer pans in the series to treat the same amount of pulp than the second.

The same is true of the settlers. The pans, settlers, and—when one is used—the chemical mixer are all in the same line and on the same level and are driven from the same shaft, each machine being thrown in or out of gear independently of the rest by means of the friction-clutches shown in the illustration of the pan in Fig. 88.

To avoid the necessity of stopping the whole mill when pans are cut out for cleaning or repairs, steam siphons are used, which carry the pulp past the idle pans and into the next pans beyond them, and the operation of the mill proceeds without interruption. The shaft is made in sections—one section to each pan—coupled together. Every other coupling is a clutch coupling, and the rest are ordinary flange couplings. Between the faces of each flange coupling a ring or washer is inserted, the thickness of which is a trifle greater than the distance it would be necessary to draw the two portions of the clutch coupling apart in order to disengage them. When it is necessary to remove any section of shafting, the cover of the shaft box is removed, the flange coupling at one end is unbolted, the washer removed, and the section drawn back till the clutch coupling disengages, when the shaft can be lifted out of the box.

195. The **Boss settler,** which is used in the Boss continuous process, is shown in Fig. 91. This settler differs from those previously described mainly in the shape and arrangement of the stirrer and shoes. The pan is 8 feet in diameter, with a cast-iron bottom and wrought-iron sides. The bottom of the pan is flat, and the central cone has a much wider base than is usual in the ordinary forms. There is a slight trough in the bottom, next to the sides of the pan. The shoes are of iron, and are much larger than those used in the ordinary settler, each shoe extending across the bottom from the base of the cone to the edge of the outside groove, at a slight inclination from the radial line instead of radially. They are bolted to a muller ring or plate, which is in turn bolted to the three legs of the driver. The shoes do not touch the bottom of the pan, but work quite close to

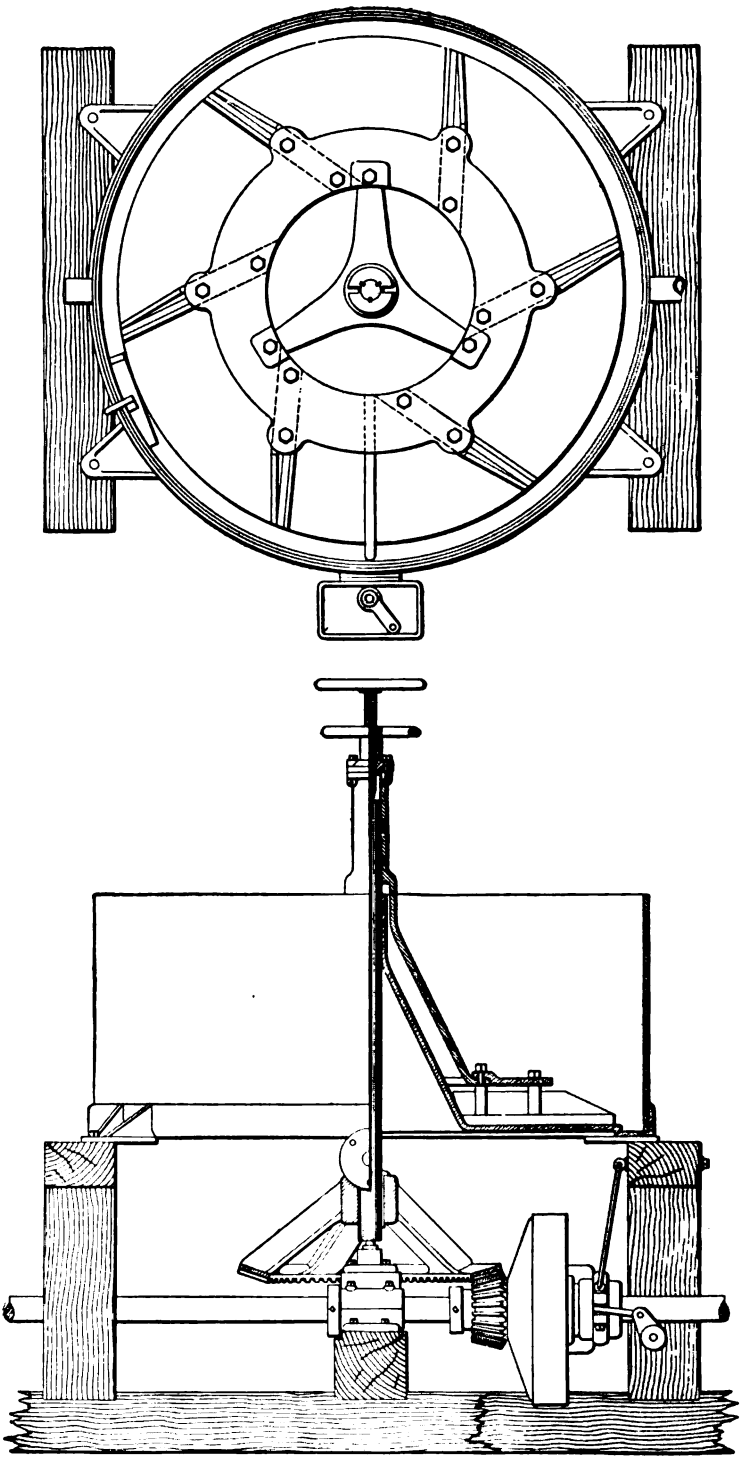

FIG. 91.

it. The angle at which the shoes are set induces a strong current on the bottom and keeps the pulp from packing. The driving and following gears are proportioned so that the stirrer makes about 20 revolutions a minute. (The speed of the amalgamator mullers is about 60 revolutions.) As a rule, no additional settling apparatus is used in Boss-process mills.

196. The **chemical mixer,** which is frequently used in the treatment of somewhat refractory ores, is of the same size as the settler and nearly identical in construction. It has, however, wooden sides, as they withstand the reaction of the chemicals much better than wrought iron; and a steam cone is run up inside the main-bottom cone, the heat from it greatly assisting the action of the chemicals. The chemicals are relatively light and the motion of the stirrer slow, so that the solution is strongest in the top of the charge, where the pulp meets it on entering the mixer; and the discharge is practically from the bottom, a vane or wing just in advance of the discharge-pipe deflecting the pulp into it as it rises from the bottom at the outside of the pan. In this way the chemicals are retained longer in the pan, and the necessary chemical action on the ore is completed sooner. The number of mixers used in the series depends on the character of the ore and the capacity of the mill. The more refractory the ore, the longer must it be exposed to the action of chemicals; consequently very refractory ores sometimes have to be passed through several mixers in order to give the chemicals sufficient time to act on them. The chemicals are fed into the mixers by an automatic chemical feeder. When mixers are not required, the chemicals (salt and bluestone) necessary for amalgamation are fed into the first pan by one of these feeders, which is placed between the first two pans of the series, and if any additional chemicals are necessary, they are fed in by another feeder farther down the line, usually between the last two pans.

197. The **mercury system** is also entirely mechanical. The mercury is stored in an iron reservoir and is run into the pans through pipes having inverted siphon-traps, where they connect with the pans to exclude the pulp. The amount being charged into each pan is regulated by a cock in the pipe near the pan. The total amount of mercury being used is shown on the dial over the reservoir. The shaft which carries the hand on the dial has a small sprocket on it, over which passes a link-belt chain, one end of which is fastened to a cast-iron float on the mercury in the reservoir, while the other end carries a counterweight which keeps the chain taut. As the mercury falls in the reservoir, the float sinks with it and draws the hand around on the dial. The mercury bowls of the pans and the first settler are connected by pipes with a receiving tank, into which the amalgam may be run by merely withdrawing the plugs in the bottoms of the bowls. The amalgam can be drawn at will from the receiving tank into an automatic amalgam safe, in which it runs into canvas straining bags. Most of the excess mercury drains off automatically and falls into the bottom of the safe, leaving the amalgam in the strainer; the strained mercury runs out of the safe, through pipes, into the boot of a small link-belt elevator, by which it is raised and dumped back into the storage reservoir, to be used again.

198. In the Boss process, when the ore is crushed wet, the pulp runs directly from the stamps into the grinding pans. The proportion of water ordinarily used in wet crushing in stamp-mills would render the pulp altogether too thin for amalgamation; so the size of the screen meshes is increased considerably and the water cut down to the proper proportion for pan pulp. In this way the same crushing capacity is obtained and the average size of the product is practically the same, and the pulp can pass to the grinding pans at once, without intermediate settling.

When the ore is very refractory and has to be crushed dry and roasted, the roasted ore is mixed with water and fed

continuously into the grinding pans by a screw feeder. Ordinarily the roasted ore is spread out on cooling floors to cool before going to the pans, but in the more modern continuous-process mills there is no handling of the ore from the beginning to the end of the process. The ore passes from the bins into revolving drying furnaces; from the dryers it goes directly into the automatic feeders of the stamp battery; the pulp from the battery is elevated by a continuous-belt elevator into the hopper of the roasting furnaces—which are generally of the revolving type (Howell-White continuous or Brückner cylinder)—where the salt is added to chloridize the ore; after passing through the furnace it goes to the mixing pan, from which the screw conveyer carries it to the grinders; and from here on the operation is as previously described. In old-style mills the roasted ore is spread out on a cooling floor and cooled, and is then carried to the mixer by hand.

199. Clean-Up Pans.—Clean-up pans are small amalgamating pans, used in gold and silver amalgamating mills for cleaning dirty or impure amalgam before retorting, and for working up small quantities of heavy blanket concentrates, battery sands, etc. They are made in various sizes, from 15 inches to 5 feet in diameter, 4-foot pans being the most commonly used in large mills. The construction and mechanism are the same as those of ordinary amalgamating pans. For cleaning amalgam, wooden muller shoes are generally used, as they are required more for stirring than for grinding. The dirty amalgam is charged into the pan with enough additional mercury to make it perfectly fluid, and thoroughly stirred. The foreign matter rises to the top of the liquid bath of amalgam, and is washed away by water running through the pan.

For treating concentrates and battery sands, iron shoes are used, as it is necessary to grind the pulp, and iron shoes not only wear better, but clean the surface of the gold, so that it amalgamates more readily. When the pans are used for both purposes, the deep wooden shoes are shod with cast

iron. The wooden blocks extend above the surface of the amalgam, so that no amalgam will be deposited on top of the shoes when the pan is drained.

In many small mills, amalgam is still cleaned by hand, grinding with more mercury in iron pots or hand-mortars, and concentrates and battery sands are panned with an ordinary miner's gold pan, to recover free gold and amalgam. All modern mills, however, are fitted with some form of mechanical clean-up apparatus—usually pans. A clean-up pan known as the **Berdan pan** is considerably used in Australia and New Zealand. It is merely a revolving pan, slightly inclined from the horizontal, and containing an iron ball, which naturally stays at the lower edge as the pan revolves, grinding the ore as it is carried around by the pan.

200. Clean-Up Barrel.—The clean-up barrel is made and operated in the same way as the amalgamating barrel (Art. **202**), but is unlined, and not so large—being usually 3 feet in diameter and 4 feet long, or smaller. The amalgam and mercury are charged into the barrel; the barrel is then run nearly full of water, closed, and revolved for several hours at about 20 revolutions a minute. Scrap-iron is sometimes added, but this flours the mercury and does not materially assist the operation, and its use is now being generally abandoned. At the end of the agitating period the barrel is opened and washed out with water—the tailings being run over amalgamated plates or through some other form of amalgam saver—and the amalgam in the barrel is removed, strained, and retorted.

BARREL AMALGAMATION.

201. The Freiburg, or barrel, process of amalgamation is not used in America. A few attempts at barrel amalgamation have been made, but in all cases they have given way to the pan process, which is much quicker, and in every way superior to the barrel process. However, a

description of the barrel and a brief outline of the process will be given.

202. The Barrel.—The amalgamating barrel is cylindrical in shape, usually about 4 or 5 feet long inside and the same in diameter. Fig. 92 shows one form of barrel. Some barrels have a replaceable lining of wooden blocks, about 5 inches square and 3 or 4 inches thick, set on end, as shown in the illustrations; this lining can be replaced when it wears out, and the barrel will last indefinitely. The barrel is made of soft pine staves, 2 or 3 inches thick, bound together with iron bands; and the joints between the planks forming the heads are grooved and fitted with tongues of hardwood. When the barrel is not lined, the staves are from 4 to 6 inches thick when new, and are replaced after they have worn down to about 2 inches. The ends of the barrel are strengthened and braced by a cast-iron spider, through the ends of whose arms are passed tie-rods which draw the barrel heads firmly up against their seats. These

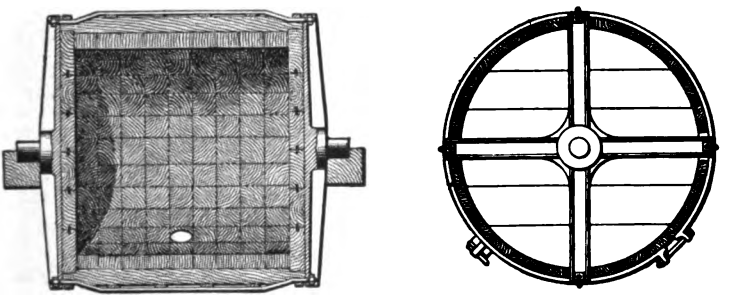

FIG. 92.

spiders are cast in one piece with the trunnions on which the barrel revolves. In some mills steam is used in the barrel to heat the pulp, in which case one of the trunnions is made hollow and the steam-pipe is passed through it, with a gland to prevent leakage.

203. The general plan of operation in the barrel process is practically the same as in pan amalgamation—drying, crushing, roasting, and amalgamation—but the details of

the process are entirely different and necessitate much expensive machinery, and the entire process extends over a period several times as long as would be required to treat the same ore by the pan process.

Drying.—The ore from the mines is run through a jaw crusher, and then conveyed directly to the drying floor or kilns, where it is spread out to dry as rapidly as possible. The drying floor is usually a floor of cast-iron plates, forming the covering of a series of flues about 8 inches deep, through which the smoke and waste gases of the roasting furnace pass; or the floor may be heated by a special fireplace. The ore is constantly raked and turned on the drying floor until perfectly dry.

204. Roasting.—From the drying floor the ore is carried to some form of dry-crushing apparatus, usually either stamps or a ball mill, where it is reduced to a maximum size of 40 mesh, or, in some cases, to 60 or even 70 mesh. The crushing and screening to such fine sizes naturally consume considerable time. From the crushers the ore goes to the roasting furnaces, which are usually either reverberatory, Stetefeldt, or Brückner cylinder furnaces. The ore is roasted with salt until the silver is all in the form of chloride, and any sulphur and arsenic are volatilized. This usually requires 6 or 8 hours; in the case of very rebellious ores it may require as much as 16 hours, or even longer. The ore is roasted for several hours before adding the salt, in order to volatilize the sulphur, etc., as the chloride of silver is slightly volatile, and a small amount of it is apt to be carried off in the fumes, particularly in the first part of the roasting operation, when copious fumes of sulphur, arsenic, and antimony are passing off.

205. Screening.—When the roasting is complete, the roasted charge is withdrawn and spread out on the cooling floor to cool as rapidly as possible, in order not to form lumps. As soon as it is cool enough, it is run through a 40-mesh screen, or finer, and all lumps which refuse to pass this screen are repulverized. The reason for this screening

is that the barrel pulp is mixed with only enough water to make a rather thick mud of it, but not sufficient to soak into and disintegrate clots, so the mixing must be extremely careful. It is this fine crushing and repeated screening that consume so much time in the barrel process and make it so much slower than the pan process.

206. Charging.—The roasted ore is thoroughly mixed with sufficient water to make a fairly thick mud, and this is charged into the barrel, together with from 60 to 200 or 300 pounds of scrap-iron, and run in this condition for 2 or 3 hours before adding the mercury; the object in using the iron is to reduce the chlorides of silver, lead, and copper to the metals, which the mercury would otherwise have to do itself. The mercury is then added—from 250 to 500 pounds to the charge—and the barrel again revolved for from 12 to 16 hours at the rate of 15 revolutions per minute. A small quantity of bluestone is usually added with the mercury, for the same reason as in pan amalgamation.

207. Discharging.—When the amalgamation is complete, the plug in the mercury hole is removed when the hole is in its lowest position, and the mercury and amalgam are withdrawn into a receiver beneath. As soon as the pulp commences to follow, the plug is replaced. The amalgam is then removed and the pulp from the barrel is run into a large agitator, where the fine globules of amalgam are settled out. The rest of the process is the same as pan amalgamation.

AMALGAMATING STAMP BATTERY.

208. The amalgamating stamp battery is specially designed for the recovery of *metallic* gold and silver from their ores, and is the simplest apparatus known for this purpose, and, with proper care, one of the most efficient. The pan and barrel systems just described are designed especially for the treatment of *silver* ores in which the metal is in the combined form, either as minerals not susceptible to direct amalgamation—as the sulphides, arsenides, etc.—or

as minerals, like the chloride, bromide, and iodide of silver, which, although amalgamable, are, from their comparative lightness and other physical characteristics, not readily brought into direct contact with the amalgamated surfaces of the battery plates and apron plates. The slow and long-continued working of such ores in pans or barrels gradually brings every particle of ore in contact with the mercury—a thing practically impossible in the comparatively swift moving and turbulent water in the battery and on the apron plates.

209. Amalgamating Mortar.—The mortar of the amalgamating stamp battery differs very little from mortars used simply as crushers, except that amalgamated copper plates are placed *inside* the mortar. The amalgamating mortar must be made somewhat wider than is necessary if the mortar is to be used for crushing alone, in order to get the plates farther away from the stamps and dies, and thus decrease the force of the splash. The same thing may be accomplished by deepening the mortar, using a higher discharge, and setting the plates higher above the dies; but this either decreases the capacity of the battery or necessitates the use of a coarser screen or more water, and is less satisfactory generally. If the plates are too close to the stamps, the splash will scour off the amalgam and greatly injure the efficiency of the battery as an amalgamating machine.

210. Wet crushing is absolutely essential for successful direct amalgamation in the battery, as the pulp must be very thin and open to insure the gold coming in contact with the plates. Even when the pulp is very thin, the battery screen of quite fine mesh, and the gold comparatively coarse, there is always more or less gold which escapes from the mortar without amalgamating, and with it considerable finely divided amalgam; and in order to catch these, copper *apron plates* are placed in front of the battery. These apron plates are thin sheets of copper, usually from 8 to 12 feet long and the full width of the mortar, and are set on an

incline of about 1 in 12. They are described in detail in Arts. **212** to **215.** The pulp falls from the battery screens directly upon the plates, and flows over them in a thin, rippling stream; the gold and amalgam sink to the bottom and are caught by the amalgamated surface of the plate. If the gold is very fine or is rusty, some of it will not be caught even on the apron plates, but will be floated on with the tailings. Formerly this loss in the tailings was overlooked; but close competition and the working of low-grade ores have forced it into the notice of the millman and metallurgist, and at present there are a large number of devices in use designed to save float gold. These will be discussed farther on.

211. Battery Plates.—Figs. 30 and 31 show amalgamating gold mortars. Inside the mortar there are usually two copper battery plates—one at the back, bolted to the mortar, as in Fig. 31, or held in place by taper keys, as in Fig. 30, and one in front, screwed on to the chuck block and inserted and removed with it. Occasionally end plates are used, but they are not common. Some mills, working base ores by combined amalgamation and concentration, use only the front plate. The plates are generally from $\frac{3}{16}$ to $\frac{3}{8}$ inch thick, and are usually not silvered.

In most modern amalgamating mortars, the back plates are protected from the scouring of the ore, as it is fed into the mortar, by projecting shelves or lips, as shown in Figs. 30 and 31; but there are still many mortars in use in which the back plates are set directly in the feed opening. When the plates are protected by a lip, the mortars are sometimes made with a second opening at the back, extending the full length of the mortar, through which access may be had to the plate in the place beneath the lip. This opening is kept closely covered, while the battery is in operation, by a tightly fitting splash-board, as shown in Fig. 30. On an average, about 75 per cent. of the total gold saved as amalgam is caught on the inside plates of the battery. The proportion in a few instances runs up to a little over 90 per

cent. Most of the gold that escapes the battery plates is caught on the apron plates, and a little on the blankets, bumping tables, or other concentrating apparatus.

212. Apron Plates.—Apron plates are set immediately in front of the mortar, fitting snugly up under the cast-iron lip or apron. They are usually of $\frac{1}{16}$ or $\frac{1}{8}$ inch copper, and in all modern mills are electroplated on the upper surface with silver—from 1 to 3 ounces of silver to the square foot of surface—as the silver amalgamates much more readily than pure copper, and works well from the very beginning of the run, while it requires several days' run and elaborate preliminary cleaning to get the surface of a plain copper plate into fit condition for amalgamating the gold to good advantage. Plates of Muntz metal—an alloy of 60 per cent. copper and 40 per cent. zinc, used for ship sheathing—have been tried in some localities, and on certain qualities of low-grade ores give better results than plain copper plates, and do not foul so readily, probably on account of a weak galvanic current formed by the copper and zinc with the acid water. The plates amalgamate more readily than plain copper, and work well from the very start, but the coat of amalgam is very thin and superficial and easily removed; hence, they are less advantageous for rich ores, as they have to be cleaned up too frequently. Further experiments with this metal are desirable.

213. The plates are fastened to carefully planed tables by copper screws or nails, or are held down by cleats, and are beaten down to a perfectly smooth, even surface by means of hardwood blocks, which are placed on the plate and struck with heavy mallets. It is highly important that the surface of the plate be perfectly smooth and set horizontally parallel to its width, so that the pulp will be evenly distributed over the entire surface. The table may be made of narrow widths of heavy planking, spiked firmly to the inclined framework; but a better design is made up of narrow strips of wood, set edgewise, lengthwise of the table,

and bound together every two or three feet by light iron tie-rods. A table built in this manner will not warp, and the even surface of the plate is more easily preserved. Tables made of sections of cast iron are sometimes used, but wood is cheaper and lighter, and answers the purpose just as well.

214. In the California milling practice, a very peculiar and unpractical arrangement of the outside plates has been in vogue for years, and, though rapidly dying out, is still retained to a considerable extent. The length of the apron plate proper is cut down to from 10 to 48 inches, and from it the pulp is run into sluices from 14 inches to 2½ feet in width and 10 to 16 feet long, paved with copper sluice plates. Besides being much narrower than the apron plates, the sluice plates are given a slightly greater inclination, usually ¼ inch more to the foot. In spite of the increased speed and scouring action of the pulp stream after leaving the apron, as a result of the contracted channel and increased grade, the California millman of the past imagined that he was saving in the sluices gold and fine amalgam which could not be caught on the apron plates. Notwithstanding the fact that on its very face the whole idea is contrary to all reason, California millmen have clung desperately to it for years, refusing to see what one would suppose impossible to overlook, and being governed by precedent rather than reason. The decline of the old-school millman and metallurgist, however, is attended by the passing of such unscientific constructions.

215. Preparing the Plates.—As has been stated before, quicksilver which already contains some gold or silver catches gold or silver more readily than mercury alone. If the surface of the plates be amalgamated with pure mercury, they will allow considerable gold to escape at first, but will steadily improve as the amalgam grows richer, until they are working normally. But if the surface be previously coated with a gold or silver amalgam, well worked in, the plates will do full duty from the start.

For this reason new copper plates are coated with gold or silver amalgam before being used, or else plates electroplated with silver (see Art. **212**) are used, the silver plating amalgamating with the mercury used in dressing the plates and giving the same effect as preparing with amalgam, with much less time and trouble. Gold amalgam works somewhat better on the plates than silver amalgam, but is seldom used, on account of the great expense.

To prepare plates for amalgamation, they are first scoured with sand or emery-paper until they are clean and bright. They are then washed with a strong soda or lye solution to remove all traces of grease. Dilute nitric acid—a 10-per-cent. solution—or a comparatively strong solution (about 2½ per cent.) of potassium cyanide may be used instead of lye or soda. After washing with the chemicals, the plate is well washed with water, and then a mixture of equal parts of sand and sal ammoniac and a little mercury is rubbed on with a scrubbing-brush. The sand and sal ammoniac are used to keep the plate clean while the mercury is being rubbed in. Enough water is used to make a thick mud. More mercury is sprinkled upon the plate from a flask with a piece of cloth tied over the top, and the rubbing is kept up until the surface of the plate has absorbed all the mercury it will hold. The plate is then allowed to stand for about an hour, and then washed clean with water, or with cyanide of potassium and water, and more mercury is added if the plate will hold it. If the plates are plain copper, they are next given a coating of gold or silver amalgam, and are then ready for use. The amalgam is rubbed in with a piece of rubber belting or cloth, the plate meanwhile being kept wet with sal ammoniac. When rubber belting is employed, a piece is fastened between two blocks of wood so as to leave about 1 inch of the belting projecting from the wood. The entire block, belting and all, is sometimes called the rubber. If old mercury is used in preparing the plates, the use of special amalgam is unnecessary, as mercury strained, or even distilled, from amalgam retains enough gold or silver to start amalgamation at once.

216. Cleaning and Dressing. — The plates are cleaned up at intervals varying with the richness of the ore being treated, the idea being to let as much amalgam accumulate as possible without loss from scouring. The amalgam does not accumulate evenly all over the plate, but in ridges, which grow steadily, and, if left too long, commence to scour off. If the mill is running on low-grade ores, the outside plates are usually wiped twice a day—morning and evening—or only once a day if the ore is very poor.

As the richness of the ore increases, the interval between clean-ups shortens, and for very rich ores it is sometimes necessary to clean the apron plates every hour, or even oftener. The battery plates are not cleaned until the amalgam stands up in thick ridges; with very rich ores it may be necessary to clean them once or twice a week, or even every 48 hours, but they are usually cleaned every two weeks, when a general clean-up of the whole mill is made.

217. The plates are cleaned by rubbing the amalgam loose with a wiper made by fastening a piece of rubber belting between blocks of wood, with about half an inch of the rubber projecting, or with a whisk-broom, cut down to make it stiff. The apron plates are wiped from bottom to top, the men using bits of plank to kneel on while working. If necessary, fresh mercury is sprinkled on the plates after wiping, and is rubbed in with a piece of rubber. In a general clean-up the stamps are hung up, two batteries at a time, and the screens, battery plates, and dies are removed and carefully cleaned of amalgam. The battery sands are removed and are either fed into one of the other batteries or are panned, bits of iron removed by a magnet, and the concentrates transferred to the clean-up pan; or, in some mills, they are saved and returned to the mortar on starting up again. All amalgam sticking to the stamps and to the inside of the mortar is carefully collected, and, with the rest of the amalgam from the clean-up, is first strained to remove the excess of mercury and then transferred to the

clean-up pan, or—in small mills—to a hand-mortar, where it is ground with fresh mercury and cleaned. The amalgam from the pan is again strained, and the balls of dry amalgam are then ready for retorting. The process of retorting and the retort are described farther on, in Arts. **232** to **234.**

218. Every three to six months, according to the richness of the ore, the plates are scraped with a steel scraper or spatula, leaving only a very thin film of amalgam on the plates. In some mills the plates are "sweated," in order to get more gold out; but the plates frequently have to be resilvered or reamalgamated after sweating, and the operation involves much more labor than simply scraping; the thin film of amalgam left after scraping is, moreover, very advantageous in starting up again. Sweating is merely heating to loosen the amalgam. The plates are removed from the tables and heated over a wood fire, expelling most of the quicksilver, and the gold scale remaining behind is then scraped off. Practically the same result is accomplished without removing the plates from the tables by washing them with boiling water or playing a jet of steam on them to soften and loosen the amalgam, which is then scraped off. In some mills, chemicals are used in the sweating, the plate being first heated to expel the quicksilver and then rubbed with a solution of niter and sal ammoniac and again heated, when the gold rises in scales and blisters. The plate is sometimes plunged into a tank of boiling water on being removed from the fire, when the gold scales off. "Skinning" plates in this manner is not usually advisable during the life of the mill, as the plates are very apt to get buckled and be irreparably ruined, and there is then nothing left but to melt them up and get new plates. The gold recovered from the old plates is usually more than sufficient to pay for a new set, but it takes some time to get new plates to work properly, and they will soon absorb practically as much gold as would have remained in the old plates after scraping; so that there is really little or nothing gained financially, even

if we do not consider the time lost in changing the plates and the time and amalgam lost in breaking in the new plates.

219. New plates rapidly become tarnished from the action of the acids in the pulp, forming a thin film of copper salts, or "verdigris," over the surface of the plates, which prevents them from catching the gold and amalgam flowing over them. The tarnish appears in spots—yellow, brown, or greenish—and spreads rapidly if not removed at once. To remove the stains, the battery is stopped and the spots scrubbed with a solution of sal ammoniac; this is left on for a few moments to dissolve the coating, and is then washed off and the plate scrubbed with a potassium cyanide solution to brighten it; this is finally washed off, more mercury is added if necessary, and the battery is again started up. After the plates have once acquired a thick coating of amalgam they do not tarnish very readily; for this reason silver plates give less trouble from this source than plain copper. Plates dressed with nitric acid tarnish more rapidly than those dressed with soda and cyanide. In some mills, a little cyanide of potassium is fed into the mortar from time to time, to prevent the plates from tarnishing; and soda or lye is frequently used in the mortar to counteract trouble from grease.

220. Mercury Feed and Loss.—The amount of mercury used depends upon the richness of the ore. The quicksilver does not wholly dissolve the gold scales, but only forms a coating of amalgam on the surface; consequently, weight for weight, the finer the gold the more mercury is necessary to amalgamate it, as the smaller particles present more surface in proportion to their weight than the larger ones. Generally speaking, with a clean gold ore, about 1 ounce of mercury should be charged into the mortar for each ounce of gold in the ore treated. Impurities alter the proportion greatly, however, and it is sometimes necessary to charge two or three times as much mercury as there is gold in the ore, in order to preserve an amalgam of the proper

consistency. In American practice no mercury is charged on to the outside plates, except a mere sprinkling after clean-ups, all the mercury for the amalgamation being charged into the mortar. It is charged a little at a time, at intervals of from half an hour to two hours. Automatic mercury feeders are made which dip up and feed small quantities of mercury into the mortar at proper intervals, but most millmen prefer hand feeding, as the feed is more easily regulated thus, and the work of feeding amounts to practically nothing; in fact, the regulation of an automatic feeder to suit the varying conditions in many mills would consume more time than would be required to feed the batteries by hand.

The rate of feed of the battery is regulated according to the appearance of the amalgam on the apron plates. About half of the quicksilver fed into an amalgamating mortar escapes through the screen on to the apron plate, and if the battery has no inside plates, practically all the quicksilver sooner or later finds its way on to the apron plate. This mercury catches on the amalgamated surface of the plate, and then amalgamates with any free gold or amalgam coming in contact with it. The proportion of mercury fed should be kept such that the amalgam thus formed on the apron plate is pasty. If too much is fed, the amalgam becomes liquid, and is apt to gather into globules and run off the plate or scour off easily; if the feed is too slow, the amalgam becomes too hard and does not catch gold well.

221. On an average, from 20 to 30 per cent. of the mercury used in stamp-battery amalgamation is lost—mostly through flouring and sickening. Of course, the loss depends largely upon the character of the ore and the experience and judgment of the amalgamator; in many instances it runs much above 30 per cent., either unavoidably or through carelessness. By careful amalgamation and the use of amalgam savers below the apron plates, it can be reduced to a minimum.

DEVICES FOR SAVING FLOAT GOLD AND AMALGAM.

222. Step Plates.—As previously stated (Arts. **157** and **163**), one of the chief sources of gold loss is from float gold and floured amalgam being carried away in the pulp stream without coming in contact with the plates at all. In stamp-milling, various devices are adopted to overcome, or at least to mitigate, the losses from this source. The *step plate* is one of the most common of these. The apron plate, instead of being one continuous sheet, is divided laterally into two or more segments, and between the foot of each segment and the head of the next one below there is a step or drop of 1 or 2 inches—just enough to cause a slight splash and free floating particles of gold and amalgam from their buoyant film of air, submerging them and bringing them into contact with the plates, but not enough to scour the plates.

Sometimes the plates are placed directly under one another and zigzag, the alternate plates slanting with the same gradient, but in opposite directions. The pulp stream falls from one plate to the next one below, reversing its direction each time. This arrangement allows the use of a great length of apron plates on a limited floor space, and is advantageous when the gold is very fine, as the drop from plate to plate tends to submerge float gold and amalgam, while the increased length of plate surface gives the suspended particles of gold and amalgam more time to settle. It is rather inconvenient for cleaning up, however, and has not been generally adopted.

223. Shaking Plates.—For saving fine amalgam that may escape the apron plates, shaking copper plates, placed below the apron plates, are much superior to the blanket sluices sometimes used. Sheets of copper—preferably silvered—usually 4 feet square, are set on light frames, with a grade of about ¾ inch per foot; the frame is either suspended, or, better, mounted on rocking legs, and is given a rapid side shake by connecting-rods operated by eccentrics on a belt-driven shaft at the side of the frame. The shaft has a speed of from 180 to 200 revolutions per minute.

The throw of the table is about 1 inch. At the upper end of the plate, which is about a foot shorter than the table, there is generally a cleat or riffle about ½ inch high, extending from side to side. In case the amalgam on the battery plates gets too hard, any lumps of amalgam escaping from the battery will be caught behind this riffle, the shaking motion of the table rolling them up into little balls, which gradually pick up more amalgam and increase in size, like a snowball rolled in the snow. Two shaking plates will handle the pulp from five stamps, after it has passed over the apron plate.

Shaking plates need not necessarily be used after stationary apron plates, but may take the pulp directly from the battery. The *Gauthier* shaking table is designed especially for this purpose. It has an end shake instead of a side shake, and is practically only a shaking apron plate, mounted on rocking legs and driven by an eccentric on a rapidly revolving shaft extending from side to side, underneath the table. If desired, this table can be used below the ordinary apron plates.

224. Corrugated Plates.—An effort has been made to save flour gold and amalgam by the use of corrugated apron plates. The corrugations extend horizontally from side to side, and form a series of parallel troughs or traps (see Art. **225**) in which mercury settles and catches the gold and amalgam passing over it in the pulp stream. It is doubtful if corrugated plates have any advantages over the ordinary flat plates. If much gold is escaping as float gold, a second corrugated plate, amalgamated on its lower surface and placed immediately above the first, with just space enough between them to allow the pulp stream to pass through without being backed up at all, will accomplish a considerable saving by amalgamating a good deal of the float gold and amalgam on its own surface, and forcing the rest to become submerged in order to escape it; and once wet, the particles will sink quickly and amalgamate on the lower plate.

225. Mercury Wells.—Mercury wells, or traps, are merely horizontal troughs parallel to the discharge of the mortar; a bath of liquid amalgam is placed in these troughs and the pulp stream either passes over or through this bath. When it passes through the bath, a vertical iron partition is run along the middle of the trough and dips beneath the surface of the bath, forcing the pulp stream to pass under it and up through the mercury on the other side, in order to get past the trap. The mercury-trap system is open to criticism at many points. A comparatively large quantity of amalgam is used in the traps, and the amount of capital locked up in this form is considerable. Again, this disposition of the mercury is not nearly so advantageous for amalgamation as the use of amalgamated plates, since it is much more difficult to secure the proper contact of the pulp with the mercury in the baths than on the plates. This is true even of those wells in which the pulp is forced to pass through the mercury bath, as it goes through in lumps or bubbles, and only a comparatively small portion comes in actual contact with the amalgam bath. The use of mercury wells is being gradually dropped from American stamp-milling practice. Single troughs are sometimes used below the apron plates, where they save some amalgam; but in all cases they could be advantageously replaced by shaking plates. Occasionally a mill is found in which mercury wells are used above the apron plates, but this is bad practice, as it makes it much more difficult to detect overfeeding or underfeeding of mercury in the mortar, conditions which, with the ordinary arrangement of the apron plates, become apparent at once in the condition of the amalgam on the aprons.

In Australia mercury wells are still retained to a great extent. The battery pulp passes through a series of wells and then usually over blanket tables—amalgamated plates, in many cases, not being used at all. In some mills, working rich free-milling ores in which the gold is very coarse, no mercury is used at all except in the clean-up, the heavier gold settling in the mortar, and the finer gold

being caught on the blankets. The whole practice is rather primitive in many of its details, and not up to the American standard.

226. Swinging Plates.—A form of amalgam saver used in many California gold mills is the swinging plate. Curved plates of amalgamated copper, about 3 inches deep, are hung on wires across the sluice-box, with their lower edges dipping beneath the surface of the pulp stream, and the concave, amalgamated side facing up stream. The current keeps the plates swinging gently back and forth, and float gold and amalgam are forced to pass under them to get down the stream. A great deal of the gold and amalgam is thus caught by the plates themselves, while the rest, once wet, will sink to the bottom and catch on the sluice plates or blankets. A ridge of amalgam accumulates on the bottom of the sluice immediately under each plate. The plates are placed a few feet apart along the sluice. They are comparatively inexpensive, and go a long way towards correcting the faulty design of the sluice. Straight plates would answer the purpose, but a slight curvature makes them more effective, drawing the pulp into the center and creating an eddy that aids materially in submerging the floating particles.

227. Miscellaneous Appliances.—There are numerous other gold and amalgam saving machines of varying merit. In the early days of gold milling in California, before the blanket table had given way to the amalgamated copper apron plate, **Atwood's amalgamator** and the **Eureka rubber** were quite generally used below the blankets. The former has now given way almost entirely, with the blankets, to amalgamated copper plates; and the work of the rubber is much better performed by the grinding pan. The blanket concentrates were treated in the Atwood amalgamator. This was merely an inclined table with two horizontal mercury wells or troughs, over which the pulp was run. Two revolving paddle-wheels, one over each well, with their blades barely clearing the bath of mercury, forced the concentrates to pass through the mercury,

where the gold, on account of its weight, sunk and was amalgamated. After passing the amalgamator, the material ran over a simple riffle sluice, and any escaping amalgam was caught in the riffles. The skimmings from the wells of the amalgamator and the tailings from the blankets were passed through a rubber, where they were ground between iron surfaces, cleaning the gold and freeing it from gangue; as soon as it was cleaned it was amalgamated on copper plates in the rubber. The rubber was merely a flat box with a false bottom of alternate strips of wood and cast iron, extending across the box from side to side; above this was a muller, shod with plates of cast iron similar to the bottom plates, bolted to level blocks; narrow, amalgamated copper strips were fastened on the sides of the blocks. The muller was hung from four swinging rods, so that the shoes barely cleared the bottom, and was given a short backward and forward motion by a connecting-rod and an eccentric on a shaft at the lower end of the box. The stroke of the muller was about 4 inches and the faces of the shoes and dies were 4 inches wide.

228. Besides the foregoing machines, there are numerous patented amalgamators used occasionally here and there, none of which, however, give any promise of driving amalgamated plates and pans out of the market, although some are founded on theoretically correct principles. A great many of these make the galvanic or electric current an essential feature, the idea being that the galvanic or electrolytic action keeps the mercury clean and lively—which is perfectly true; but mechanical drawbacks prevent the general adoption of these machines. To this type belong the **Molloy hydrogen amalgamator** and the **Bazin centrifugal amalgamator.**

HUNTINGTON MILL.

229. In Art. **50** the Huntington mill has been described at length and compared with the stamp battery—both as a crushing machine and as an amalgamator—and the description need not be repeated. It is not probable that

the Huntington mill will ever generally displace the stamp battery, though it may to a considerable extent.

230. When it is desired to amalgamate as much gold as possible inside the pan of the Huntington, the water-supply should be kept down as low as it can be without clogging the screens. The thick pulp remains in the mill longer before discharging, and the gold is given more time to amalgamate. As in the stamp-mill, however, a decrease in the water-supply is attended with a corresponding decrease in the capacity of the mill. On the aprons, a moderately thin pulp, flowing readily, is best; too thick a pulp will clog the plates with sand.

ACCESSORY APPARATUS.

231. Amalgam Strainers and Safes.—In silver pan amalgamation mills, where large quantities of amalgam are handled, the liquid amalgam from the amalgamating and clean-up pans is strained automatically. It is run or poured into an amalgam safe similar to the one illustrated in Fig. 93. The top and bottom of the safe are made of cast iron and the body of wrought iron. The top is concave, with a hole in the middle through which the amalgam drops into the conical canvas bag or strainer beneath. The hole is protected by a raised cap, cast on the cover or bolted to it, to prevent the theft of amalgam. The excess of mercury in the amalgam is strained through the canvas by its own weight, and falls into the bottom of the safe, leaving the lumps of nearly dry amalgam in the bags. The strained

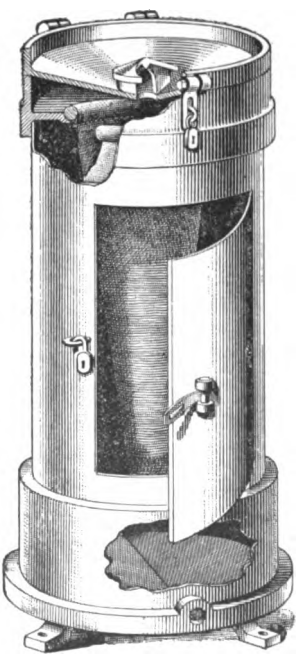

FIG. 93.

mercury is drawn off into flasks or reservoirs, or, in the continuous-system mills, is elevated by a quicksilver pump or elevator to the receiving reservoir (see Art. **197**). The cover is hinged, and can be raised to obtain access to the strainer. The strainer is fastened to a ring, and can be lifted out and cleaned. A door in the side gives access to the bottom of the safe without removing the strainer. Both this door and the cover are kept locked with padlocks, the keys of which are held by the superintendent of the mill.

232. Retorts.—The mercury is separated from the gold in the amalgam by distillation in cast-iron retorts. In

FIG. 94.

small silver mills and gold mills, where the amount of amalgam handled is comparatively small, retorts of the

type shown in Fig. 94 are generally used; but in larger silver mills, where a large quantity of amalgam is retorted,

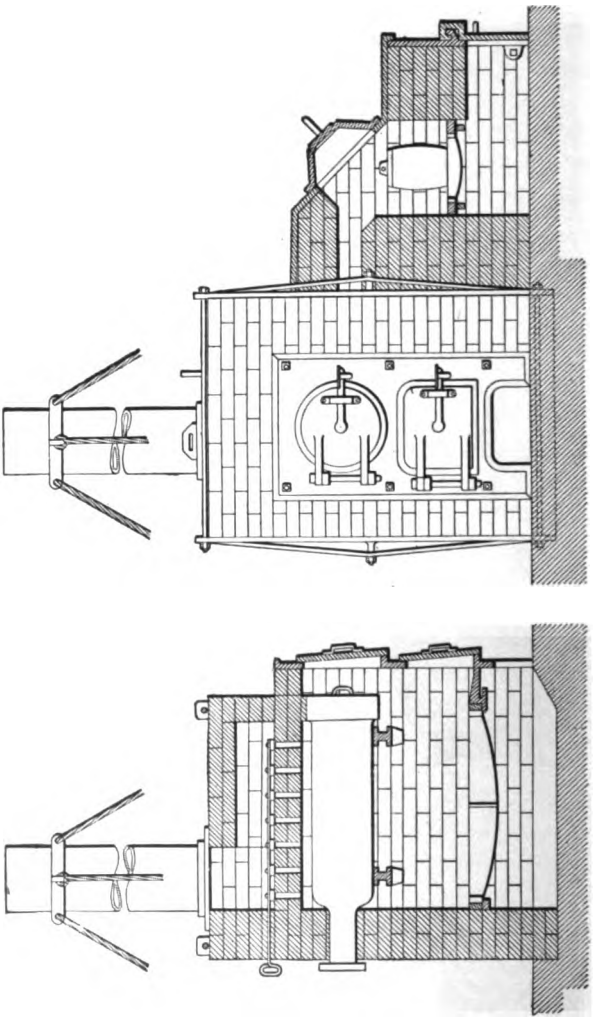

FIG. 95.

larger retorts, of the type shown in Fig. 95, 12 to 14 inches in diameter, are necessary. The small pot retort, Fig. 94, does not require a special fireplace, although one is generally

provided, but may be heated in a crucible furnace or blacksmith's forge. A special retorting furnace is, however, always provided for the large silver-mill retorts. A melting furnace, in which the bullion is melted to be cast into bricks or bars, is frequently built in connection with the retorting furnace, as shown in Fig. 95. The retort is usually placed immediately above the grate, but where large quantities of amalgam are retorted, if the furnace is left unattended for any time, a retort which is set immediately above the fire is apt to become overheated, and the weight of the metal inside then causes it to "belly," ruining it completely. To prevent this the retort is sometimes arranged with the fire at one side and a fire-bridge between, the retort being supported at several points.

In most modern retorting furnaces a number of small rectangular openings, connecting the fire-chamber with the flue at intervals along the top of the arch, causes the heating to be distributed evenly along the length of the retort; and the draft can be very delicately regulated and the heat localized, if desired, by the use of individual dampers over these holes. Many furnaces are still built, however, with only a single flue connection, at the front end.

233. Before charging the retort with amalgam, the inside surface is chalked or coated with a thin wash of clay, or is lined with a few thicknesses of paper, the ashes of which effectually prevent the gold from adhering to the sides of the retort. In large stationary retorts, the amalgam is placed in iron trays which slip into the retort and save much trouble in charging and handling. The lumps of amalgam from the strainers are broken up, placed in the retort or in trays, and pressed down firmly. In many mills the amalgam is packed with the head of a bolt, but most millmen disapprove of this practice, as packed amalgam requires longer to retort and is apt to hold some unvolatilized mercury in the center of the lumps. The condenser pipe should be carefully cleared of all obstructions, and if the amalgam is put directly into the retort, it should be

spread evenly, and in such manner that by no mischance can this pipe become clogged, as an explosion would be apt to result, filling the retorting room with poisonous mercury fumes and greatly endangering the health and lives of the men. In retorting impure amalgam containing solid substances which volatilize and recondense in the condenser tube, clogging is very apt to occur, and the condenser should be so arranged that a rod may be slipped through the tube, from time to time, to keep it open. The heating should also be very slow at first, as a further precaution against explosions.

After the retort is charged, the cover is put on. The cover and its seat are carefully faced, and in addition to this a luting of clay or an asbestos gasket is placed between the cover and the retort, to prevent the escape of mercury fumes. The cover is held firmly on its seat by clamps, tightened either by wedges or by clamp-screws. The pipe to the condenser connects with the neck at the back of the cylindrical retort, or screws into the cover of the pot retort. The condenser is merely a water-jacketed pipe; a constantly changing supply of cold water keeps the pipe cool, and the volatilized mercury is recondensed and runs into a basin of cold water at the lower end of the condenser pipe. Thus there is very little chance of any mercury vapor escaping condensation. Care should be taken that no water is drawn back into the retort by sudden cooling, as the steam generated might cause an explosion. Some millmen use a rubber or canvas sack over the end of the condenser tube beneath the water, to avoid risk from this source, the condensed mercury running into this sack.

234. The heat is gradually raised under the retort until the boiling-point of mercury is reached and active distillation commences. It is kept at this point for one or two hours, according to the amount of amalgam, and is then again gradually raised to a bright red heat and held there for some time, to expel the last of the mercury. The fire is then drawn and the retort allowed to cool. After it is

thoroughly cooled, the cover is removed and the metal withdrawn. The trays used in large retorts are divided into small compartments by partitions, so that the "retorts," as the masses of retorted metal are called, will be of a convenient size and form for introducing into the melting crucible without breaking up. The retorted metal is porous and spongy, and usually contains a considerable proportion of impurities. It always retains a small amount of mercury, which is only expelled in the final melting.

235. The melting is done in clay or graphite crucibles, with borax and bicarbonate of soda; and if the "retort" contains much sulphur or base metals, a little niter is also used to oxidize these impurities. The fluxes aid in the fusion and slag off the impurities. The fluxes are added a little at a time; as soon as their action has ceased and the slag becomes quiet, it is skimmed off and more flux added. This is continued till the surface of the melt remains perfectly clear and shiny, when the crucible is withdrawn and the bullion quickly poured into an iron ingot mold, previously warmed and greased on the inside with heavy mineral oil or beeswax. Most large mills do their own melting and refining, but many small mills sell their "retorts" to private refineries or directly to the mint.

236. There should be a "hood" above the melting-furnace to carry away the fumes that arise when the crucible is uncovered for skimming and prevent their spreading through the room. This precaution is very frequently neglected, but the many cases of salivation among the melters are proof of the necessity of observing it.

GENERAL MILL ARRANGEMENT.

MILL SITE.

237. One of the first considerations in the erection of a gold, silver, or concentrating mill, next to the certainty of an ore supply to keep it running, is the selection of an advantageous location.

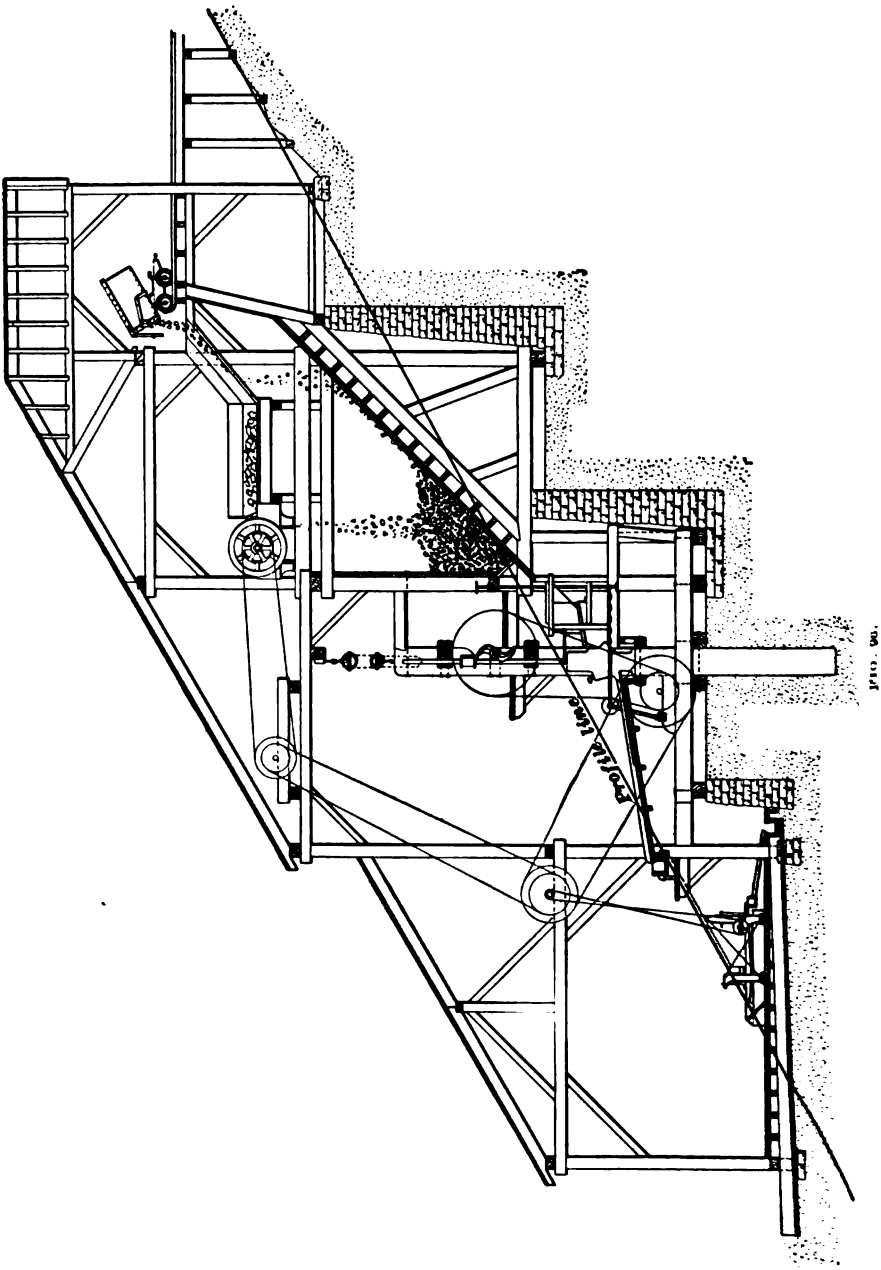
Fine coal
Coal
Fine coal
Fine coal
Fine

238. Fall of Ground.—In order to avoid mechanical handling of the ore and to keep the expense of milling down as low as possible, the mill designer takes advantage of the force of gravity and places the successive machines at successively lower levels, so that the material runs directly from each machine to the next one in order. To secure the necessary difference in elevation between the crusher and the final apparatus for this arrangement, without building the back of the mill very high, it is always desirable to place the mill on sloping ground. The slope should be chosen to correspond as closely as possible with the calculated slope of a line from the gates of the ore bins to the tailings discharge of the mill, in order to avoid all unnecessary building or excavation. When ground has to be cut away, strong retaining walls should be built at the back of the excavation and between the benches, as shown in Fig. 96, to prevent caving.

GENERAL ARRANGEMENT OF BUILDINGS AND APPARATUS.

239. Mills are usually arranged so that the mine-cars or skips, or the ore wagons, if the ore has to be hauled to the mill, can run into or alongside the mill on an elevated track or staging (see Fig. 96). In most modern mills the cars dump on to grizzlies, and only the coarser lumps of ore go to the rock-breakers, the smaller stuff falling through the grizzlies into the ore bins below; this greatly lightens the duty of the crusher. Many mills are still found, however, where all the ore entering the mill is put through the rock-breaker, regardless of its size. The coarse ore from the grizzlies passes on to the crushing floor, or, in most large modern mills, to a coarse storage bin, the gate of which opens upon the crushing floor. By keeping a supply of coarse ore in this way, the crusher may be kept steadily at work, and the power used by the mill kept more nearly constant. This is particularly desirable in concentrating mills where vanners are used, as these machines are very

sensitive to change of power, and a variable power makes their regulation much more difficult and renders constant attention necessary; and even if every possible precaution is observed, they will not do nearly so good work as when running under uniform power. In small mills the power consumed by the crusher is often about one-fourth of the total power of the mill, so that throwing it in and out makes a decided difference in the speed of the other machinery. With large mills this is less important than in small mills, but, nevertheless, it is a notable factor in the working of a mill.

240. Rock-Breakers.—The mouth of the rock-breaker is set level with the feed floor, so that the ore can be shoved into it, and need not be raised, thus saving the feeder much work. Gyratory crushers are gradually displacing jaw crushers for large mills, both on account of their great capacity and the comparatively small jar and vibration. In modern milling practice, the rock-breaker is frequently placed at the mine, and the ore comes to the mill bins already crushed. This relieves the mill of the strain and jar of the crusher, and makes the consumption of power, and consequently the running of the mill, more uniform.

241. Ore Bins.—The sills of the framework of the ore bins should all be on the same bench or terrace, and should not be set on different levels along the slope. The bottom timbers of the bin proper are usually set sloping at an angle of about 45 degrees towards the gate, so that the ore will run down to the gate by its own weight. Bins are sometimes built flat-bottomed, but this necessitates shoveling the ore to empty the bin, and thus offsets the increased capacity. The bins are double-boarded with heavy planks, usually with a layer of building paper in between to prevent the loss of fines. The inside bottom planks should be laid lengthwise down the slope, as they wear better this way and the ore slides more readily. Planks set crosswise wear away rapidly and form riffles, which hold back the ore and catch the fines behind them. The bin linings should be renewed

as fast as they wear out. When large amounts of ore are handled through the bins, they are frequently lined with plates of iron. Owing to the fact that ore slides better on iron than on wood, it is possible to give the bottoms of the bins a flatter slope, and hence a greater capacity when iron linings are employed.

242. Water-Tanks.—In most mills the water-supply runs into wooden or iron tanks—usually circular and from 8 to 20 feet in diameter—and is drawn from them as desired. By this means a practically constant head or pressure is obtained, and there is always a reserve supply of several thousand gallons—enough to run the mill for several hours if necessary. Some mills use two tanks, one of which is filling while the other is in use. These tanks are usually set outside of the mill, on the ground. In cold countries, however, this is not always practicable, as the tanks would freeze up during the cold weather, and it becomes necessary to keep them under cover. In such a case, the tanks should be put in a separate room with its floor sills independent of the rest of the framework of the mill; or if set in the main building, they should at least be set on independent timbers; for if the tanks are set on the mill timbers, the jar of the crusher and other machinery is communicated to the water in the tanks and sets it in rhythmic motion, and the vibration of this immense weight of water is transmitted to the mill timbers, and will sooner or later, if continued, rack the building to pieces.

AMALGAMATING MILLS.

243. The general arrangement of the rock-breakers and ore bins is practically the same for all classes of gold and silver mills. Below the bins, however, the machinery and arrangement vary with the amount and nature of the work required of the mill. Thus, the machinery of a concentrating mill is entirely different, and differently arranged from that of an amalgamating mill, as will be seen by comparing Figs. 96 and 98. Of course, all mills should be designed to make the operation as nearly as possible continuous and

automatic. For instance, in an amalgamating mill the ore bins discharge directly on the feed floors of the stamp battery, Huntington mill, or whatever fine-crushing machine is used; or, if automatic feeders are employed, into the hoppers of the feeders. The battery or mill discharges on the apron plate, and the pulp flows from the apron plates directly on to any subsequent gold or amalgam saving apparatus that may be used, and which is on a level 3 or 4 feet lower than the battery floor. If the mill is a combined amalgamation and concentration mill, as in Fig. 96, the concentrating

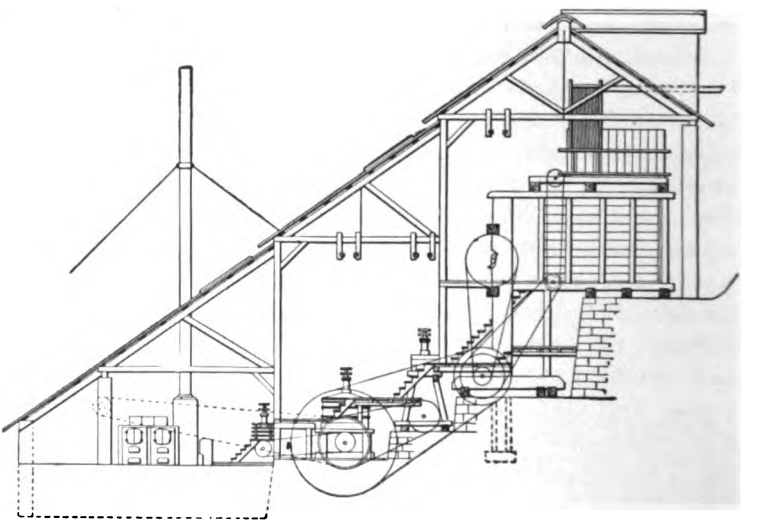

FIG. 97.

apparatus—vanners, bumping tables, or similar machines—is put on the floor below the battery floor. If hydraulic classifiers are used, they can be suspended from the roof timbers or set on frames, usually parallel to the battery discharge, and receive the pulp directly from the plates, discharging the sized ore through pipes into the distributing boxes of the concentrators. Further slime-saving apparatus below the vanners or other concentrators is seldom used, but the tailings water may be run into large settling vats and the tailings settled out. This is particularly applicable in

dry countries, where the water-supply is limited, as the water from the settled tailings may be pumped back to the tanks and used over again, with a loss of perhaps 20 or 25 per cent. The tailings, if they contain much value, may be treated by chlorination or cyaniding. In very dry regions, as portions of Australia, the water is sometimes removed from the tailings by means of filter presses. The design of silver amalgamating mills is still different from that of gold amalgamating and concentrating mills. Fig. 97 shows a Boss continuous-process mill in section.

CONCENTRATING MILLS.

244. The object of a concentrating works is merely to get the values in an ore into a smaller bulk, in order to diminish the trouble and expense of shipping and further treatment, and not the immediate actual extraction of the metals in the ore.

The operation is purely mechanical, the ore and gangue being separated by crushing, and the gangue, owing to its lower specific gravity, being washed away. This being the case, crushing and careful sizing become highly important.

245. No definite scheme can be laid down for the arrangement of concentrating mills. This depends largely upon the nature of the ore, and still more upon the ideas of the designer. Several methods, each requiring different apparatus and arrangement, may be equally well adapted to the concentration of an ore, and the selection of any one method lies with the designer, who is supposed to take into consideration local conditions as far as possible. Thus, local factories, if there are such, are usually given the preference, if their machines can compete on anything like equal terms with those of outside manufacturers. The personal preferences and prejudices of designers are frequently important factors in the designing of mills.

The concentrating gold mill is, for several reasons, usually much simpler in design than concentrators for copper,

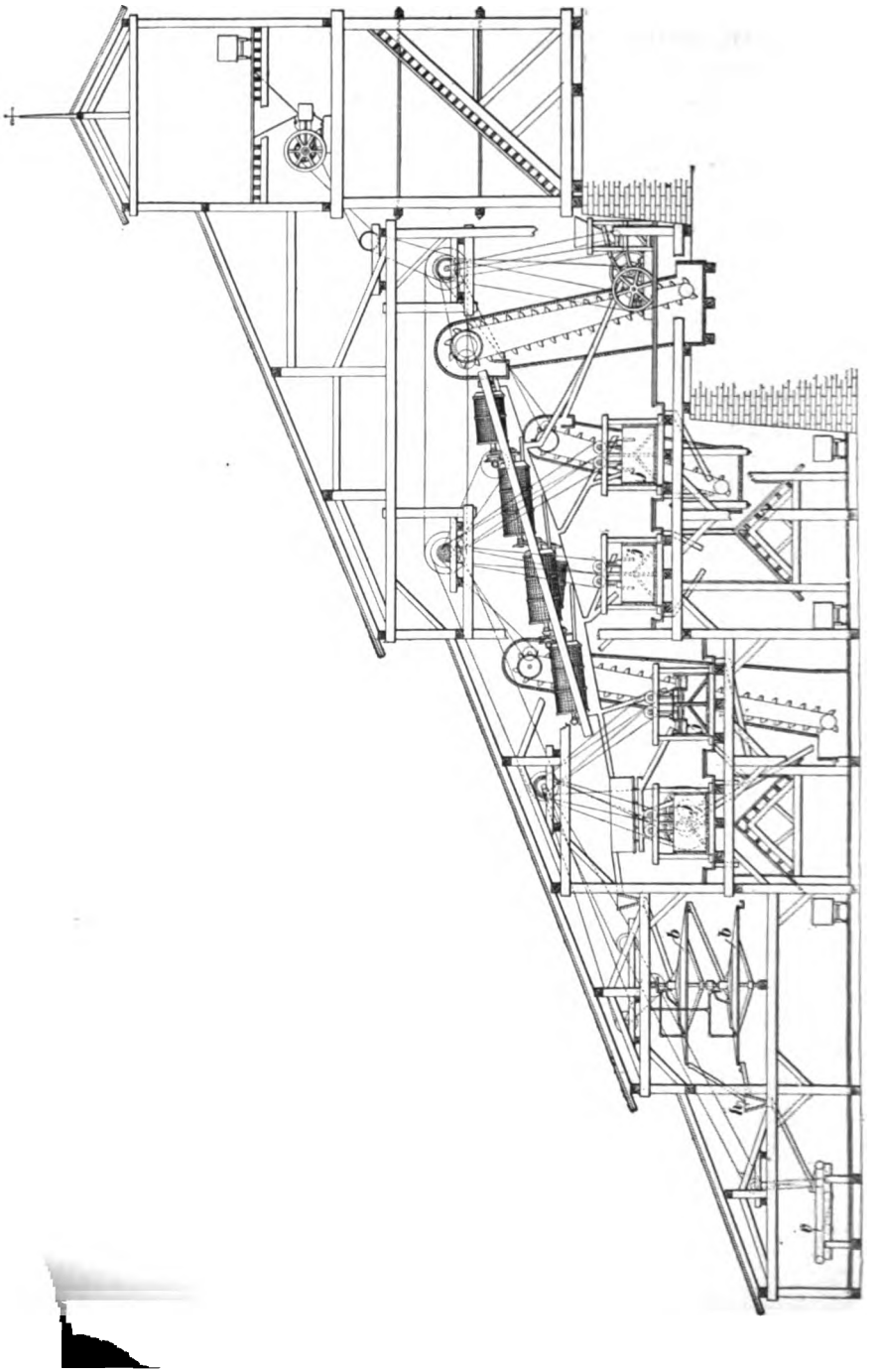

lead, and zinc ores. In the first place, the out-of-the-way location of the average gold mill makes the freight on apparatus an important consideration in the first cost and running expenses; and, again, such mills are usually only temporary structures, doomed to abandonment as soon as the ore-body is exhausted. As a rule, gold mines are exhausted after being worked continuously for a few years, and the ore-body may play out unexpectedly at any time, so that it is desirable to put as little extra expense into the mill as possible. It is seldom worth while to dismantle an old mill. Nevertheless, the mistake of putting too little apparatus in a mill is much more common than that of putting in too much. Additional machines, if of good design and within reasonable limits, will usually pay for themselves.

With immense low-grade deposits, like those of Dakota, Idaho, and Douglas Island, Alaska, it will usually pay to put in more elaborate concentrating plants, as a very small increase in the saving per ton counts up rapidly where several hundred tons of low-grade material are being treated daily, and the ore-bodies are practically inexhaustible. Fig. 98 is a cross-section of an Idaho concentrating mill, showing jigs *j*, *j*, hydraulic classifiers *h*, buddles *b*, and vanners *v*. In the Butte (Montana) copper region, concentration has reached its highest development in America. The ores of this region, though containing small quantities of gold and silver, are essentially copper ores, the gold and silver being obtained merely as by-products.

246. Roll crushing is almost invariably adopted in concentrators, though steam stamps have replaced rolls to a considerable extent in the Montana and Lake Superior copper regions. The usual arrangement of concentrating mills is somewhat as follows: The grizzlies, rock-breakers, and bins are practically the same as for amalgamating mills. From the bins the ore goes to the coarse or *roughing* rolls, or to a second rock-breaker, set closer than the first, which fills the place of the roughing rolls. In many mills a second

rock-breaker is placed between the main rock-breaker and the rolls, to lighten the duty of the latter. In such a case the product of the first rock-breaker usually goes to a trommel whose meshes correspond to the maximum size of the product of the second breaker, and the material which is already fine enough to pass the second crusher is taken out, only the oversize product of the screen (the portion which will not pass through the screen) going to the second breaker.

The product of the second crusher is elevated by a belt or chain elevator back to the trommel, which is the first of a series of three or more. The undersize product of trommel No. 1 includes the undersize product from the first crusher, and practically the entire product of the second crusher; this falls into the hopper beneath the trommel and passes through a chute into trommel No. 2, whose meshes correspond to the maximum size of the product of the roughing rolls. The oversize from this trommel goes to the roughing rolls, while the undersize goes to trommel No. 3, whose meshes correspond to the maximum size of the product of the fine or *finishing* rolls. The product of the roughing rolls is elevated back to trommel No. 2 and rescreened. The oversize from trommel No. 3 goes to the finishing rolls.

The product of the finishing rolls may be elevated directly back to trommel No. 3, or may be taken off by a chute—or, if the rolls are on the same level, by a horizontal traveling belt—and combined with the product of the roughing rolls and elevated with it to trommel No. 2. The latter arrangement saves one elevator, but it throws more work on trommel No. 2, without appreciably lightening the work on trommel No. 3, and necessitates a horizontal traveling belt or chute between the roughing and finishing rolls.

The undersize from trommel No. 3 goes out to the next machine. In most gold-concentrating mills this is the coarse jig, but in many large mills the undersize from trommel No. 3 is carried to a fourth trommel, only the oversize from which goes to the coarse jigs; the undersize from trommel

No. 4 may be further sized by going through more trommels, each additional trommel giving another jig size, or it may be carried directly to the intermediate jigs, and the work of sizing thrown upon them.

247. When ore is crushed fine and sized through screens, the undersize from the last screen usually goes to hydraulic classifiers, which remove the slimes. The spigot discharge of the classifiers is carried to the finishing jigs, and the overflow, with the slimes, goes to settlers, where the superfluous water is removed, and then to the slime concentrators—vanners, buddles, etc. In the Butte concentrators, trommels are replaced to a large extent by classifiers of the type shown in Fig. 58, with two or more spigots, the discharge from the spigots going to the respective jigs or to vanners, and the overflow going either to the settling tanks, and thence to the slime concentrators, or to waste. This arrangement is common among those mills using steam stamps instead of rolls for the comminution of the ore.

248. Treatment of Jig Products.—The treatment of the jig products depends upon the character and grade of the ore. When the mineral occurs in bunches, rather sparsely scattered through a clean gangue from which it separates readily, the ore is usually crushed rather coarse, and after screening out the fines, goes to the coarse jigs. The clear mineral headings from these jigs are a finished product containing very little gangue, and go to the drying floor, and thence to further treatment for the extraction of the values. The tailings from these jigs are usually quite clean and go to the tailings dump. The middlings are mixed gangue and mineral, and are recrushed in fine rolls, stamp batteries, or some patent mill, like the Heberle, Sturtevant, or Huntington, to further liberate the enclosed mineral. In the recrushing of coarse-jig middlings such as we have been considering, rolls would be preferable, and the recrushed material would be sized by trommels, the oversized going to the next jig below in the series, and the undersized going on to the finer jigs and subsequent apparatus.

249. When the mineral is distributed quite uniformly through the gangue, and particularly when the gangue is tough and intimately associated with the mineral, the crushing must be much finer to begin with than in the previous case, in order to secure a clean separation, and we will get a small headings class, a large middlings class, and a more or less rich tailings class. Frequently, in working medium-grade ores, it is found advisable to recrush the jig tailings from the coarse jig, and sometimes from the fine jigs as well, in some fine-crushing machine, and then classify them and concentrate them on vanners, buddles, etc. As the grade of the ore improves, other conditions remaining the same, the loss in the tailings, of course, increases.

MISCELLANEOUS APPARATUS.

250. Elevators.—Belt elevators and link-belt (chain-and-sprocket) elevators are largely used in mills for automatically raising the material from the crushing machinery to the screens, or to samplers, etc., or, in general, for delivering material to higher levels. These elevators are merely continuous belts, to which sheet-iron or steel buckets are fastened at intervals. The belts in gold and silver mills are uniformly run at a speed of about 200 feet per minute, the capacity of the elevator being regulated by the size and spacing of the buckets.

The belts commonly used are 5 or 6 ply rubber belts or link belts. Leather belts are used to some extent in dry-crushing mills, but would soon stretch out of shape if used for elevating wet material. For elevating hot material, such as ore from dryers and roasters, chain-and-sprocket elevators are used exclusively. The buckets are fastened to rubber and leather belts by countersunk rivets. The belts run on pulleys (or sprockets) on countershafting. The entire apparatus—unless it is to be used for handling hot material—is enclosed in a tight wooden casing or housing, to prevent splashing or dust, as the case may be, with their

attendant inconveniences and loss of material. The material falls into the boot of the elevator—which is usually made, like the rest of the casing, of wood, but sometimes of heavy sheet iron—and the buckets scoop it up, elevate it, and discharge it into a chute or spout leading to the next piece of apparatus, as shown in Fig. 99.

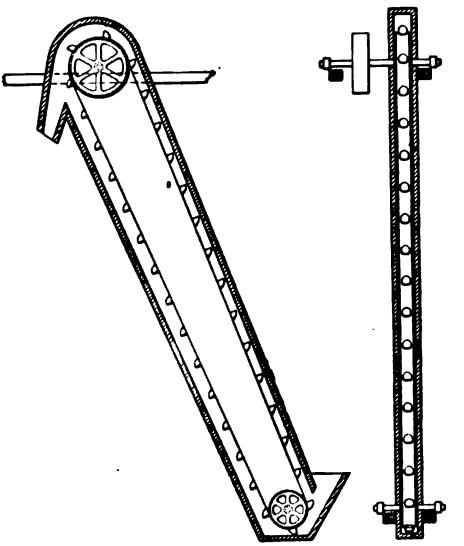

FIG. 99.

Chain-and-sprocket elevators are of two general types—single-chain and double-chain. In the first type, the buckets are bolted at their backs to the links of a single chain, while in the second type the buckets are hung between two parallel chains. Link-belt machinery has been generally adopted for conveyers of all kinds.

251. Sand-Wheels. — Frequently the tailings-discharge opening of a mill or concentrating works in time becomes blocked by the tailings backing up from the dam or tailing dump, so that it becomes necessary to lift the tailings as they leave the mill. This may be accomplished by a bucket elevator similar to that shown in Fig. 99, but when an elevator is employed it requires a belt, and the expense for the belts in the long run is considerable. On this account sand-wheels are frequently employed. They are really nothing but overshot water-wheels which have been reversed, so that in place of the descending water operating the wheel, the rotating wheel lifts the water and tailings in its buckets. The buckets are placed on the inside of the

rim of the wheel and are filled from launders or sluices at the bottom and discharged into launders or sluices at the top, which carry the tailings to the dump or tailing dams. The sand-wheels are driven by belts or gearing.

252. Sand-Pumps. — Sometimes tailings are discharged by means of centrifugal sand-pumps, which force the material mixed with water up and into the launders on a higher level, so that it can flow away.

In cases where plenty of water is available at the mill, the tailings may be removed by means of a hydraulic elevator, which is really a water ejector, and which takes advantage of the force of a comparatively small stream of water under a great velocity and makes it move a large stream of water and sand at a comparatively slow velocity and raise it to a moderate height. This device is frequently employed for handling the tailings in placer-mining work, and will be found equally efficient for handling the tailings at mills.

253. Discharging Tailings Without Water.—In regions where water is scarce, some arrangement must be made for removing the tailings after the water has been drained or filtered out of them. This may be accomplished by means of a railroad track and cars, or by conveyers, either of the chain-and-bucket or endless-rope pattern. One great difficulty in regard to all forms of conveyers has been that as the tailings pile increased it became necessary to lift either the track or conveyer so as to keep it from being buried up under the tailings. To overcome this the tripods carrying the conveyer may be supported on screw-piles, which can be lifted as fast as the pile of material grows. One of these adjustable supports for a conveyer is shown in Fig. 100.

254. Differential Pulleys.—Differential pulleys are indispensable around mills for lifting heavy apparatus, such as stamps, the mullers of amalgamating pans and settlers, etc. By their use one man can raise easily, and with no risk of dropping and breaking, weights which several men could not move by main strength alone.

255. Crawls.—Overhead crawls, or tackle-block carriages, are merely movable hangers or supports for the differential pulleys. They are usually made entirely of iron, the most common form being the four-wheeled carriage shown in Fig. 101. There are various other forms in use, however—four-wheeled carriages, with flanges outside, running on a single horizontal timber, with iron or steel strips for tracks; two-wheeled carriages running on a single track; and a single wheel carrying a hook.

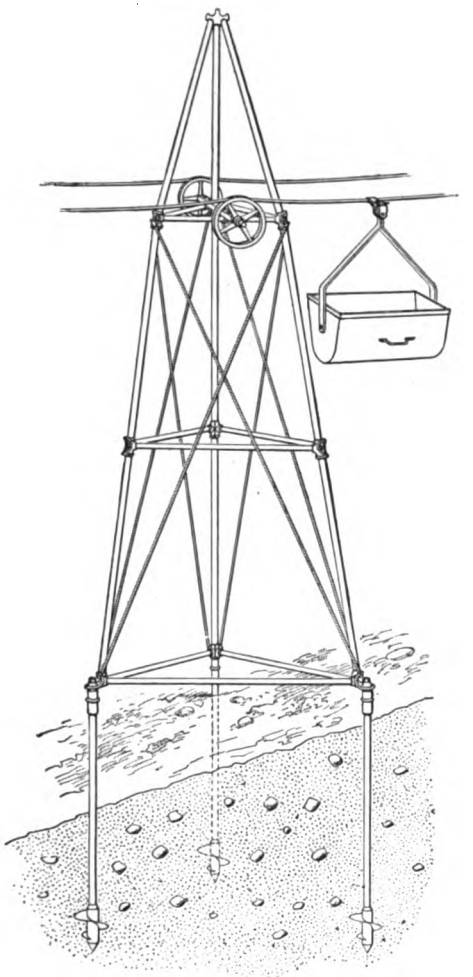

FIG. 100.

The tracks on which the crawls run are suspended from the timbers above the stamp batteries, pans, etc., so that the crawl with its pulley can be run back and forth to any point, and the stamp or muller lifted and swung out of the way. One crawl and one pulley are supplied for each row of apparatus. The tracks most commonly used are made by fastening flat steel or iron strips by screws to heavy horizontal timbers, which are suspended by wooden

hangers from the overhead frame timbers. Flat iron bars, suspended edgewise by iron hangers, are also common.

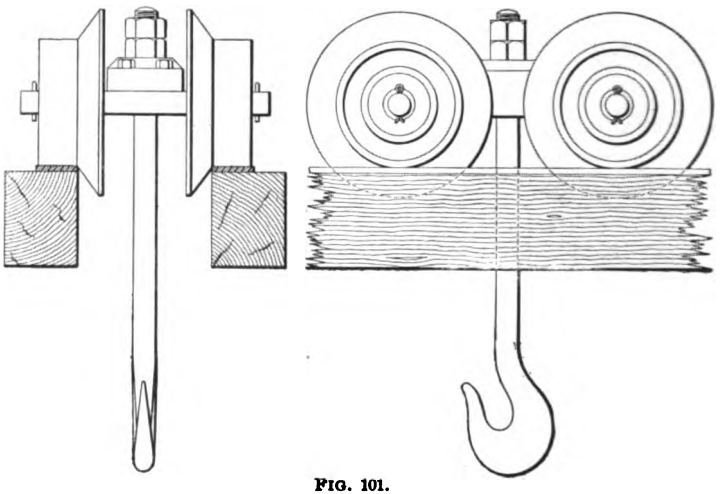

FIG. 101.

256. Exhaust-Fans.—Exhaust-fans are used in all modern dry-crushing mills, to draw off the dust, more or less of which will escape even from the most carefully housed machinery. The fans are placed at advantageous points in the upper part of the mill, and keep up a draft through the mill, drawing in the dust and discharging it outside. They are indispensable to the health and comfort of the workmen in dry-crushing mills. In addition to these ventilating fans, sometimes fans are connected by pipes directly to the housing of the machinery, drawing off the dust before it can get out into the mill.

SPECIAL EXAMPLES OF CONCENTRATION.

CONCENTRATION AND PREPARATION OF COPPER ORES.

257. The concentration of copper ores as carried on at present naturally divides itself into two distinct methods: (1) The concentration of those ores in which the copper occurs in metallic form, as, for instance, the ores of the Lake

Superior region in the United States. (2) The concentration of ores in which the copper occurs as a copper mineral, usually one of the compounds with sulphur or oxygen.

258. Native Copper Ores.—In the first case, the concentration is simplified by the fact that the copper is all in metallic form, and hence it is practically impossible to produce slimes from the metal itself; also the great difference in specific gravity between the copper and the associated gangue renders the separation much easier than is the case with the copper minerals. Owing to these facts, a special method or system of concentration has been developed in the Lake Superior region. The old gravity stamps have been abandoned and heavy steam stamps introduced. (See Art. **42.**)

The copper ore as it comes from the mine is, to a certain extent, hand sorted in order to remove any large masses of the metal. The ore is all stamped through coarse screens and is classified by means of hydraulic classifiers. (See Arts. **81** to **83.**) As a rule, no screens or trommels are used for sizing the material. The material leaving the hydraulic classifiers (Arts. **81** and **82**) passes to Collom jigs. These jigs, as a rule, produce three classes of material: fine concentrates passing through the jig sieve and into the hutch box under the jig (commonly called hutch work); barren tailings over the end of the jig and a bed of mineral on the sieve, composed, in the case of the coarse jigs, mainly of nuggets of metallic copper; and on the jigs farther down in the series, a mixture of gangue and metallic copper, which requires further crushing. This material is commonly called ragging. The beds of the jigs are cleaned out at intervals, the metallic copper being placed with the concentrates, and the ragging being returned to the stamps for further reduction. The hutch work passes to other jigs or settling boxes and is worked over again. The slimes passing through the screens of the finishing jigs are worked on buddles or slime tables and in tossing tubs or keeves. The slime concentration machinery at many of these copper concentrators

appears very complicated, and yet it is mostly composed of such simple machines as buddles and keeves, which have very few parts requiring renewal.

259. Ores Containing Copper Minerals.—Ores of the second class present a very different problem, for the copper mineral naturally crushes finer than a large portion of the gangue rock. This results in the production of a great percentage of slimes. The engineers in charge of concentration works in the West have followed two lines in dealing with this class of material. In some cases they have introduced the steam stamp on account of its great capacity and the low cost per ton for which it will crush the material. Where steam stamps have been introduced, an attempt has been made to follow the Lake Superior system of concentration as closely as possible; but most mills have introduced some more expensive machinery for dealing with the slimes (such as Frue vanners and other special concentrating machinery), in addition to buddles or slime tables. They have also been forced to introduce large slime pits, in which an attempt is made to catch the valuable portions carried off in the fine slimes. The overflow from these pits is carried out of the mill and saved behind dams. The pits are cleaned and the material mixed with lime before it is fed to the furnaces. The material which settles behind the dams is cleaned out every few years, and either allowed to dry in solid cakes or mixed with lime and charged into the furnaces. This handling of the slimes is very expensive and leaves a large amount of copper locked up for months or years before it is recovered.

260. The other general method followed by engineers in charge of this class of concentration works is that of successive reduction and separation, the crushing being accomplished by means of rock-breakers and rolls, and the material being sized by means of trommels or screens. Hydraulic classifiers are also used to make intermediate classifications. The material is passed over jigs, and any of the middle products (corresponding to the raggings of the

Lake Superior ore) are recrushed by rolls or special machines (such as Huntington mills). The jigs used for the coarse concentration work are usually of the Hartz pattern, those for the finer work being of the Collom, Evans, or Slide pattern. The work is carried on very much as described under the heading of "Concentrating Mills" in Arts. **244** to **249.**

POINTS TO BE OBSERVED IN CONCENTRATION.

261. In concentrating any ore of copper, the object is to produce a product suitable for the copper furnace, and on this account iron pyrites is not unwelcome, as it will assist in forming the matte, and the iron is useful in the subsequent processes of treating the matte. In concentrating ores of tin, lead, or zinc, it is of considerable importance that the different minerals be separated, for iron and lead will injure the retorts or furnaces in which the zinc is treated, while zinc in the lead furnace renders the smelting very difficult and tends to carry off both lead and silver as fumes or to carry them into the slag. When it becomes necessary to separate two minerals which have specific gravities varying but little, the material must be closely sized before it is passed to the jigs or other concentrating machines.

262. Before any ore can be concentrated, it should be crushed to such a size that the grains or crystals of the different minerals are set free, and the first crushing should be such that the average size of the product is the average size of the mineral grains. The result of concentrating such a product will be pure grains of the mineral and barren tailings; also a third or intermediate product, consisting of particles which contain both the mineral and the gangue and require further crushing before they can be concentrated. This rule applies equally to the methods of dry, magnetic, and wet concentration.

263. When gold and silver are present in the minerals in the ore to be concentrated, this may have a decided effect

upon the method pursued, for if the gold or silver occurs in one particular mineral, the concentration will be carried with an idea of saving the greatest possible percentage of the mineral containing the gold and silver.

CONCENTRATION OF LEAD ORES.

264. Lead ores which occur pure, that is, free from other metals, are frequently hand-picked or washed on hand jigs to separate them from the gangue. Where the ores occur in somewhat harder formations, they require crushing and sizing previous to jigging, and if the mineral is finely disseminated through the ore, fine crushing and close sizing will be necessary, especially if the zinc ores occur associated with those of lead. Some concentrating mills also use buddles, or other slime-working machines for concentrating the fine ore. Where the lead ores are associated with some zinc ores or with iron pyrites, a separation may be effected by closely sizing the ores and then carefully jigging them.

CONCENTRATION OF ZINC ORES.

265. Where the ore of zinc is blende, either associated with lead ores or occurring by itself, it may be separated by picking and by crushing and jigging. When the zinc ores contain minerals carrying iron or manganese, they may be treated by magnetic concentration (see Arts. **142** to **144**). Where the objectionable material is franklinite, it may be separated from such minerals as willemite or zincite by means of magnetic concentration, as is done at the New Jersey mines, the franklinite being removed and employed for the manufacture of zinc pigment, and the residue from this process used in the manufacture of spiegeleisen. The non-magnetic portions, consisting mainly of willemite, are used for the manufacture of zinc. The non-magnetic portions carry more or less gangue material with them, and this has to be separated by means of ordinary wet

concentration on jigs. Some ores of zinc have been freed from iron by roasting the ore until the iron is rendered magnetic, and then separating the same on magnetic separators.

CONCENTRATION OF TIN ORES.

266. Tin ore should be free from other compounds before it is introduced into the smelting-furnace. These facts render the concentration of such ores somewhat more difficult, but by taking advantage of the difference in their specific gravities, the problem is by no means impossible.

Ordinarily tin is concentrated by hand-sorting or crushing and then stamping the ore, after which it is sized and separated by means of jigs, buddles, and keeves. The concentrates consist of tinstone and minerals carrying iron associated with sulphur and arsenic. The sulphur and arsenic are driven off by roasting, after which the iron oxide is removed by further concentration. The fact that tinstone is already in the form of an oxide keeps it from being changed during an oxidizing roasting.

When tinstone is associated with large amounts of mica and close sizing is not desirable, most of the concentrates of the jigs are formed as hutch work; that is, the concentrates pass through the sieves of the jig and the tailings over the ends, while the material from the ordinary concentrate, discharged over the bed, is middlings or raggings, which require further treatment.

CONCENTRATION OF MERCURY.

267. As a rule, the ores of mercury are separated entirely by hand-picking and sorting, no concentration machinery being employed.

CONCENTRATION AND PREPARATION OF IRON ORES.

268. Most of the iron ores need no preparation before they are charged into the furnace, but there are great deposits of lean ores, or ores containing certain ingredients

which it is desirable to remove, and various processes have been introduced to prepare these ores for use. These operations or processes may be described as follows:

1. Separation of the ore from barren rock or gangue by means of ordinary wet concentration.
2. The separation of ore from clay by washing.
3. The elimination of sulphur or carbonic acid.
4. Magnetic treatment of ores.

269. Wet Concentration and Sorting.—Under the first class can be considered all the ores in which the iron mineral is fairly hard and the gangue consists of quartz or other worthless material. Such ores are commonly broken or crushed and separated by hand-sorting or cobbing. For this purpose, special sorting floors are sometimes provided; the best or clean ore being picked out in the mine, goes directly to the cars or stock-pile, while the ore which is mixed with more or less gangue is sorted into two or more classes of merchantable ore (the number of classes depending upon the percentage of ore in each), and a worthless class composed of the barren rock or gangue. The sorting or picking may be done on floors, from tables, or picking belts. A great many plants have been introduced for the preparation of ore by ordinary wet concentration, using rock-crushers and rolls to reduce the material, screens or hydraulic classifiers to size or sort the crushed material, and jigs or other concentrating machines to separate the ore from the worthless material. Owing to the extremely low price per ton which iron ore brings at the present time, it is impossible to concentrate most low-grade ores at a profit. This is especially true in cases where both the ore and the gangue are hard, thus causing excessive wear on the rolls, crushers, and other machinery, and requiring a large amount of power. The expense per ton is often more than the price of the ore warrants, and as a result nearly all, if not all, of the plants which were operating upon the harder non-magnetic ores, by means of wet concentration have been closed.

270. Iron Ores Containing Clay.—Many of the iron ores, especially those of the Eastern and Southern States, are associated with more or less clay. A great many machines have been brought out to wash this material from the ore, but the primitive log washer has developed into a form which seems the best adapted for this purpose. (See Art. **151.**) Figs. 102 and 103 illustrate a log-washing plant that has been in successful operation for a number of

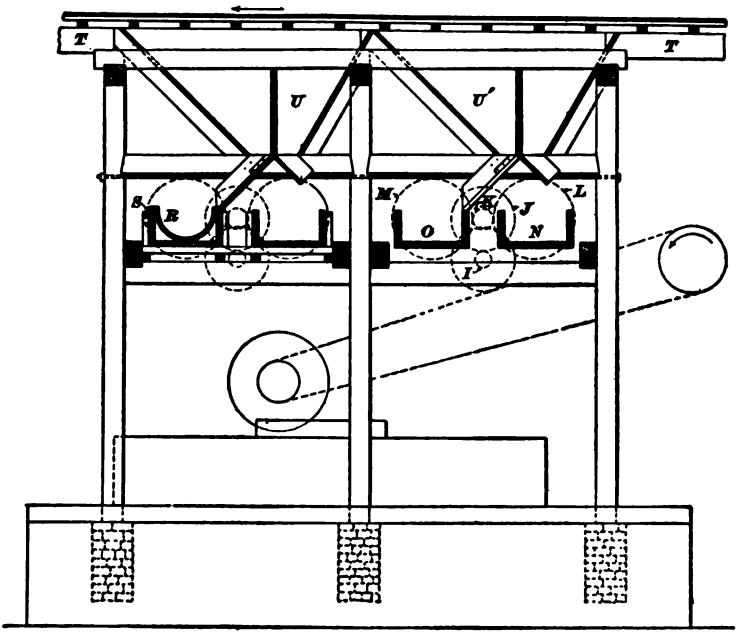

FIG. 102.

years. Fig. 102 is a front and Fig. 103 a side elevation; the engine is not shown in the plant, but is an automatic Buckeye giving 25 H. P. with 60 pounds of steam when running at 285 revolutions per minute. The plant is driven by a 12-inch belt passing over a 3-foot belt-pulley on the engine shaft. The washer proper is driven with 6-inch rubber belts running over the pulleys *D* and *E*, Fig. 103, *F* and *G* in the same figure being the loose pulleys on to

which the belts can be shifted when it is desired to stop the engine. The 4 logs are arranged in pairs, and as the pairs are alike, a description of only one pair will be needed.

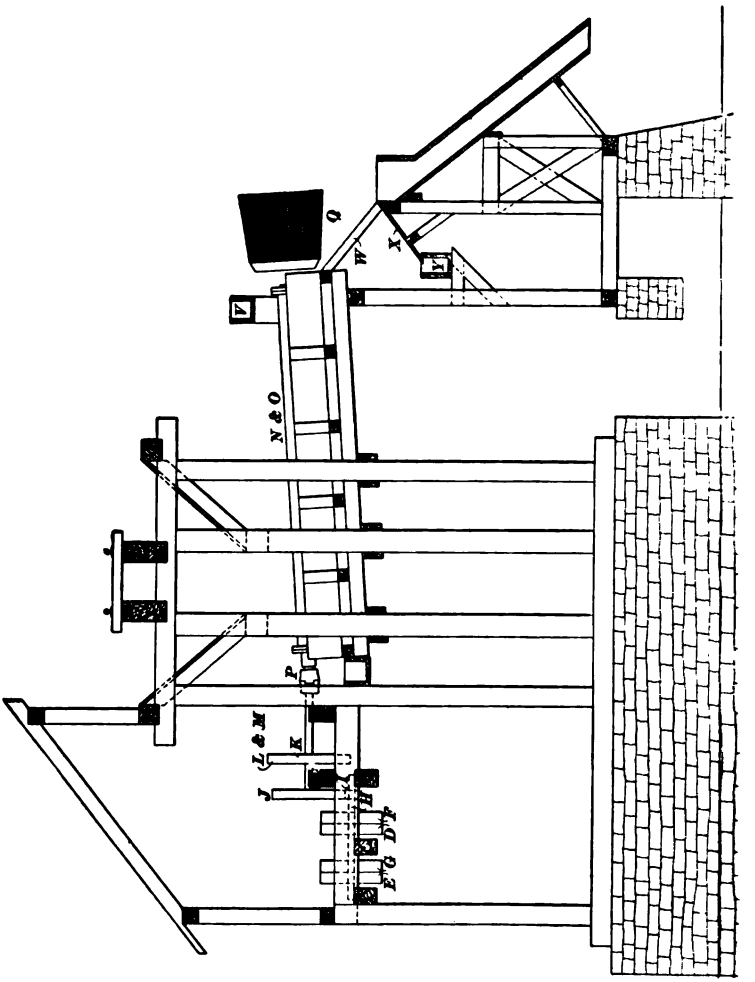

FIG. 103.

To the end of the shaft *H*, Fig. 103, on which is fastened the pulley *D*, is keyed the small pinion *I*, which meshes into the spur-wheel *J*. This drives another pinion at *K*, and this in turn gears into the spur-wheels *L* and *M*, which

drive the logs in the two washers *N* and *O* at the rate of 12 revolutions per minute.

The driving-gear is connected to the logs, which are on a slope of $\frac{3}{4}$ inch per foot, by cast-iron clutches, one of which is shown at *P*, Fig. 103.

The rear bearing is $5\frac{1}{2}$ inches in diameter and is of cast iron. It is cast solid with a flange, on the face of which is turned a shoulder. This shoulder fits into a corresponding recess turned in the similarly flanged end of the log. The two flanges are bolted together and make a very stiff joint, as the shoulder prevents any lateral motion.

The logs are simply pieces of cast-iron pipe, 17 feet $5\frac{1}{2}$ inches long, $11\frac{1}{2}$ inches in diameter, with metal $\frac{3}{4}$ inch thick, and flanged at each end. This makes a splendid log —one that is stiff and wears well.

The method of attaching the spoons is shown in Fig. 104. They are put on in two spiral threads, 180° apart, and with a 5-foot pitch. They are set 45° apart on the circumference, thus making 8 spoons to each revolution, as shown in Fig. 104. By this method of laying out, there are, at every $\frac{1}{8}$ of a revolution, two spoons opposite each other and 180° apart. If, now, holes be bored through the pipe, under the two holes with which the foot of each spoon is provided, two through-bolts will fasten on two spoons. These bolts are $\frac{3}{4}$ inch in diameter, and are made with nuts at each end as shown.

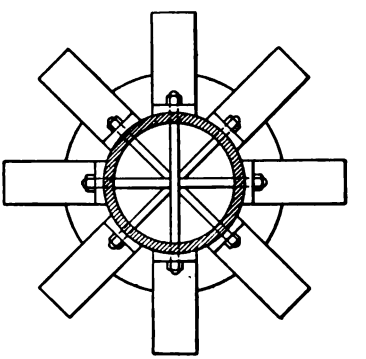

FIG. 104.

At the upper end of the log there is a gudgeon, similar to the one at the lower end, except that the bearing is only $4\frac{1}{2}$ inches in diameter and extends 2 feet beyond the box. To this end the revolving screen *Q*, Fig. 103, is attached. The screens are made of $\frac{3}{16}$-inch steel plates perforated with $\frac{3}{16}$-inch holes, $\frac{1}{2}$ inch from center to center.

The troughs in which the logs work are made of a wooden frame in which are fastened the iron plates constituting the trough proper. The bottoms and sides of the frames are of 3-inch pine, thoroughly braced by the yokes shown at *S*, Fig. 102. Both bottom and sides are bolted to iron end-pieces, in which are cast seats for the chilled-iron gearing boxes.

The iron plates constituting the trough proper rest upon the sides of the frames, to which they are attached by $\frac{5}{8}$-inch lag-screws. As indicated at *R*, Fig. 102, they are of the usual semicircular pattern, and are cast in sections only 15 inches long. This permits them to be made as open-sand castings.

In the operation of the plant, the ore is brought from the mines in side-dump cars, holding about $5\frac{1}{2}$ tons each. The cars are pushed out past the washer on the trestle *T*, Fig. 102, which is built with a grade ascending in the direction of the arrow shown in the drawing. The cars are then allowed to drop down, two at a time, until they come over the chutes *U* and *U'*, which are lined with 1-inch iron plates.

The ore, falling through the chutes to the logs, is caught by the spoons, which force it up against a descending current of water from the trough *V*, Fig. 103, until it reaches the revolving screens *Q*, into which a stream of water from the same trough *V* is flowing. There the ore is further washed and at the same time separated. All over $\frac{3}{16}$-inch diameter passes along the screen and falls into the "chute to cars," Fig. 103.

The fines, which drop through the perforations, fall on the 14-mesh wire-cloth screen *W*, Fig. 103, where they are further washed and screened, all over 14 mesh going to the cars, while the sludge falls on the apron *X*, and is thence carried away in the trough *Y*, which also conveys away the water from the rear end of the washers.

The current of water descending in the troughs is apt to carry off more or less ore through the rear end, and to prevent this loss, two perforated screen plates (not shown in the drawings) are used. The muddy water from the trough

passes through a gate upon these screens, through which it falls and is carried away into *V*, while the ore remains upon the screen. Only one screen is used at a time, and as soon as ore enough has accumulated upon it to stop the perforations, the water is shut off and turned into the other. The ore is shoveled back into the washers. This device saves a great deal of ore at a very low cost, as it requires the attention of one man for only part of his time, thus leaving him free to help at other points.

271. When clay is the only material removed from an iron ore, the percentage of impurities will not be much affected; that is, the phosphorus and similar impurities, as a rule, occur in the iron ore and not in the associated clay; hence the washing will not increase the grade of the ore materially, except in its percentage of iron. Washing plants are sometimes introduced to clean ore from clay before it is put through some other form of concentrating machinery, such as jigs, etc., or before it is hand-picked.

272. Ores Containing Sulphur or Carbonic Acid.—These impurities have to be removed by roasting, and as this is usually done at the smelter, the apparatus need not be fully described in a work on Mining. It will be sufficient to say that the roasting kilns now in use for this class of work are fired with gas and that the ore is fed to the kilns and the roasted material drawn from them continuously, much as in the case of a lime-kiln or an iron blast-furnace. This continuous action greatly increases the capacity of the kilns, and the firing with gas results in a more uniform roast than was possible in the old style of intermittent kilns or roasters.

273. The magnetic treatment of ore containing iron has been described in Arts. **142** to **144.**

PREPARATION OF SALT.

274. As rock salt comes from the mine it usually carries more or less foreign matter, and if it were ground to a fine powder for table use, it would have a dark color, and

hence would not find a ready market. For this reason, the greater portion of the table salt of commerce is made by the evaporation of brine solutions obtained either from salt wells, salt lakes, or from the sea. There are a few rock-salt mines which produce perfectly clear crystal salt, and from these table salt can be manufactured without the intermediate stages of dissolving and re-evaporation. The regular product of salt from any mine is treated as follows: The large lumps are laid under sheds to undergo a process called weathering, for the salt attracts moisture, and if the lumps are not properly weathered they are liable to break up more or less during shipment. The water which the salt absorbs from the air forms a brine on the surface which effectually cements all crevices and renders the masses solid pieces. The portion of the salt intended to be treated in the mill is crushed in rock-breakers and toothed rolls, after which it passes over shaking screens which separate the different grades. The coarsest material (up to $\frac{1}{2}''$ cubes) is used for cappings in packing meat. These cappings are added to the brine on top of the meat in order to maintain the brine at its full strength. The finer grades of salt are used in the manufacture of ice cream, for preserving hides, and for similar commercial purposes. The large lumps of weathered salt are shipped as cattle salt. When salt is prepared for the table, it is ground fine and either separated by means of shaking screens or by a blowing-machine, the different grades of salt being collected in various bins or chambers owing to their various sizes, the lightest material being blown the greatest distances.

POINTS TO OBSERVE IN DESIGNING A CONCENTRATING WORKS.

275. When an engineer is called upon to design a concentration plant, he should be very careful that he is not deceived by new conditions. For instance, the condition of the mineral may be such that concentration is impossible, as in the case of a silver sulphide ore in a comparatively hard

gangue. The silver sulphide would be pulverized so fine and form such bad slimes that it would be impossible to recover the greater part of the values from the ore.

276. Another case which might be mentioned is that of the hard iron ores banded with jasper. The jasper is frequently so intimately associated with the iron that it is impossible to separate them by crushing, and as the specific gravity of the jasper is frequently very high, a separation of the two would be practically impossible. On the other hand, the magnetic ores of iron being in the form of crystals can easily be separated from the gangue by crushing, and hence can be concentrated.

277. General Rule.—*As a general rule, it may be stated that in order to concentrate any substance, it must be of such a nature that by crushing the mineral it separates in the form of distinct crystals or distinct pieces.* Where minerals are practically of the same hardness and are intimately associated with each other, it is rare that concentration by mechanical means is successful.

A SERIES

OF

QUESTIONS AND EXAMPLES

RELATING TO THE SUBJECTS
TREATED OF IN THIS VOLUME.

It will be noticed that the various Question Papers that follow have been given the same section numbers as the Instruction Papers to which they refer. No attempt should be made to answer any of the questions or to solve any of the examples until the Instruction Paper having the same section number as the Question Paper in which the questions or examples occur has been carefully studied.

PRELIMINARY OPERATIONS AT METAL MINES.

(1) Give a general statement as to the best method of exploring ore-bodies of a uniform nature.

(2) What different forms of opening may be employed for working veins or deposits which outcrop to the surface?

(3) What are the advantages possessed by an incline as an opening into a mine?

(4) What advantages has a shaft as an opening into a mine?

(5) What influence has the character of the ore upon the form of opening used for working the mine?

(6) What influence have the workings in neighboring properties upon the methods of opening a mine?

(7) What determines the number and size of the compartments in a shaft?

(8) How should the head-frame or gallows-frame be set; that is, how should the foundation be prepared and what relation should the foundation bear to the shaft lining?

(9) What effect has the hoisting speed upon the character of the timbering necessary in any shaft?

(10) Describe the method of lining a shaft with cribbing made from round logs.

(11) Why should the cross-pieces between the shaft compartments break joints with the timbers of the cribbing sets when sawed timber is employed?

(12) What are some of the advantages of the square set system of timbering?

For notice of the copyright, see page immediately following the title page.

(13) Make a sketch illustrating one form of square set timbering and give the names of the various pieces comprising the set and of the timbers and other fastenings between the sets.

(14) What is the point aimed at in designing the joints of mine timbers?

(15) How are circular shafts usually lined?

(16) When timbering a shaft through swelling ground, is it best to attempt to resist the swelling action by means of the strength of the timbering?

(17) How are masonry shaft linings usually supported?

(18) What is the water blast?

(19) What would be a theoretically perfect grade for the track in a tunnel?

(20) What factors determine whether a tunnel should be made for a single or for a double track?

(21) Describe forepoling or spiling, as applied to work in tunnels.

(22) What are breast-boards?

(23) Why is it better to employ sawed timber in tunnels than to use rough or round timber?

(24) When approaching old workings which are liable to be filled with water, or when driving a tunnel through formations where large amounts of water are liable to be encountered, what precautions should be taken?

(25) In the case of inclines how can cars be run into lateral openings?

(26) How are steep inclines timbered?

(27) Give a statement of the general principle of the pneumatic method of shaft sinking.

(28) How is the material removed from under the pneumatic caisson during sinking?

(29) To what depths can shafts be carried by the pneumatic process?

(30) What divisions are there of the freezing process?

(31) To what classes of formation is the freezing process applicable?

(32) To what depth can shafts be sunk by means of the freezing process?

(33) Under what conditions is the Kind-Chaudron system of shaft sinking required?

(34) Describe the process of excavating and removing the material from the shaft during the sinking by the Kind-Chaudron system.

(35) How is the water made to assist in the lowering of the tubbing or shaft lining into position?

(36) Describe the continuous or "long-hole" system of shaft sinking.

(37) What special advantages has the pneumatic method of shaft sinking as compared with the other methods?

METAL MINING.

(1) What precautions should be taken when working the outcrop of veins by open cutting?

(2) What are the advantages and disadvantages of working the outcrop of a vein as an open cut?

(3) What are the advantages and disadvantages of working large bodies of ore by means of the steam shovel?

(4) Describe the milling system of mining as applied to ore deposits which are near the surface, and give the advantages of this system of mining.

(5) What is the general advantage of having the workmen outside rather than underground?

(6) What determines the distance between levels in a mine, where should they be placed, what grade should they have, and in which direction?

(7) What is the most convenient width of a deposit for mining, especially when dealing with the precious metals?

(8) Describe both systems of underhand stoping, and state the advantages and disadvantages of each.

(9) Describe overhead stoping, and make a sketch of one form of overhead stoping; also state what advantages this system has over underhand stoping.

(10) What are the advantages and disadvantages of the filling system?

(11) What are the two general divisions of the caving system?

For notice of the copyright, see page immediately following the title page.

(12) Are the caving and filling methods safe methods of mining?

(13) Why is it best to use rooms not over three or four sets high when working by means of the rooming and caving system?

(14) What effect has the value of the surface on the method of mining employed?

(15) What effect has the character of the walls upon the method of mining employed?

(16) For what class of deposits are posts and breast caps, or drift sets, employed in mining?

(17) Give a description of the method by which salt is usually mined.

(18) What two general classes of explosives are there?

(19) Illustrate by a sketch why it is more efficient to drill a blast-hole at an angle to the face than it is to drill it perpendicular to the face.

(20) What advantage is there in firing several shots or blasts simultaneously?

(21) What is meant by "bulling" a hole, and when is it employed?

(22) What are key holes, cut holes, or breaking-in holes?

(23) What is a safety-fuse?

(24) What is a detonator, with what kind of powder is it used, and how should it be placed in the cartridge when using a fuse to fire the detonator?

(25) Give a description of electric blasting or shot firing, and state by what means the electricity is generated and how the exploder should be placed in the cartridge. Also, what are the advantages of electric blasting?

(26) Of what is black powder composed?

(27) For what class of explosives is dynamite or giant powder a general name?

(28) What are stulls?

(29) Describe the system of square-set timbering and state for what class of deposits it is best fitted.

(30) What are the objections to the use of patent square-set timbering in which the tenons are round?

(31) When drifts may ultimately become parts of stopes what form of timbering is employed?

(32) What can you say in regard to the seasoning and treating of timber with the intention of increasing its life?

(33) Why is it that metal or masonry linings have not come into extensive use?

(34) Make a sketch of and describe a cast-iron post which can be used in place of a post or stull and which is so arranged that it can be removed.

(35) What are the causes of air vitiation in metal mines?

(36) What points should be observed in selecting explosives to be used in a mine, in regard to their effect upon ventilation?

(37) Describe a simple test by means of which the direction of the air-current and its approximate velocity can be noted.

(38) What are the advantages of having the men pass to and from their work through the downcast, and under what circumstances should they pass through the upcast?

(39) What are sollars, what are they used for, and what are the objections to them?

(40) What are brattices, and what are the objections to their use in metal mines?

(41) Are air-compressors ever installed primarily for the ventilation of mines, and when they are installed for other purposes, what effect have they on the ventilation?

(42) What are blowers, and under what circumstances are they used for ventilating?

(43) How does the American practice in the use of fans for ventilating metal mines differ from the English and Continental methods?

(44) What precautions should be taken in regard to the sanitary conditions underground?

(45) What is the dry or change house, and how should it be fitted?

(46) What can you say in regard to the sanitary arrangements that should be made at a mine location?

SURFACE ARRANGEMENTS AT METAL MINES.

(1) What is the ultimate object of all improvements at metal mines?

(2) What are the advantages of having individual hoisting plants located at the shafts, and when such plants are employed, what is the best arrangement in regard to the engine-house?

(3) Sketch a good pocket stop for use with coarse ore.

(4) What is the difference between a bin and a stall for storing ore?

(5) What is the object of picking or sorting ore, and how is it usually done?

(6) What is a stock-pile, and under what circumstances are stock-piles used?

(7) What is the object in separating the material on the dumps at mines into different grades, even though all the grades may not be sufficiently high to be worked at the time the material is placed on the dumps?

(8) Sketch the two different methods of measuring the gauge on a railroad, and state which is in common use on large railroads.

(9) What is the advantage of having but one style of tracks at a mine, i. e., the advantage of having tracks the gauge of which is measured in the same way, even though the gauge may not all be uniform?

For notice of the copyright, see page immediately following the title page.

(10) How does the character of the ore mined affect the means of transportation between the mine and the outside country?

(11) When ore or supplies are taken to and from the location by wagons, what is the advantage of drawing the wagons in trains?

(12) What is the advantage of keeping the timber intended for underground use in a lake or river?

(13) How does the manner in which the timber is brought to the mine affect the amount of space necessary for the storage of timber?

(14) When machine-framed timber is employed at a mine, what machines should be provided for the timber-framing plant?

(15) If power is to be transmitted some distance from the water-power plant to the mine, what two methods of power transmission are available, and what advantages has each?

(16) What should the general machine or repair shop at a large mine contain?

(17) What are the advantages of having the various buildings of the mine plant comparatively near together?

(18) How should a powder house be constructed, and what precautions should be taken in regard to storing, handling, and thawing powder?

(19) What is the advantage of using split caps on pile bents for trestle construction?

(20) Why should round stones not be used in the construction of foundations for trestle bents for railroads?

(21) What is a scarfed joint, and what are fish-plates?

(22) What two general systems of framing are employed in the construction of mills or other buildings requiring heavy timbers?

(23) What are corbels?

(24) What effect does the tendency to work low-grade ore-bodies have upon the style of machinery and the plants used at a mine?

(25) What effect does the manner in which the ore is removed from the mine have upon the bins, pockets, or other arrangements for storing ore which must be provided at a mine?

ORE DRESSING AND MILLING.

(1) What points should be observed in selecting a mill site?

(2) What is the object of crushing ores?

(3) Under what conditions does it become necessary to crush ores dry?

(4) What are the advantages of wet crushing?

(5) Give the fundamental principles of all concentration, and state the law of equally falling bodies.

(6) What is the reason for concentrating ores?

(7) What is a grizzly, and at what stage of the work in a concentration mill is it introduced?

(8) Why is close sizing necessary in the preparation of ore for concentration, and should pulp for buddles or similar machines be classified, and if so, why?

(9) What are the main points of difference between Blake and Dodge crushers, and how do these jaw crushers compare with gyratory crushers?

(10) What is the principal field for crushing rolls?

(11) Describe a log washer, and tell what it is employed for.

(12) How are crushing rolls designed to resist excessive strains?

(13) Describe the construction and crushing action of the Huntington mill, also state for what class of material it is best fitted.

(14) Give one common order for the dropping of stamps in a battery, and state what is the object for dropping them in this order.

For notice of the copyright, see page immediately following the title page.

(15) What are the advantages of sectional guides for stamps?

(16) When the tailings-discharge opening of a mill becomes too low for an ordinary discharge, how may the tailings be removed?

(17) What is a good construction for battery blocks?

(18) What is meant by the discharge of a mortar, and how is the height of discharge regulated?

(19) What is the essential condition of a mineral in order that it may be concentrated?

(20) What is the objection to iron frames for batteries?

(21) How do steam stamps work?

(22) Tell what materials are used for battery screens, and give the relative advantages of wire and punched screens.

(23) Describe the separating action of the spitzkasten, and state how it differs from the spitzlutten.

(24) What is the purpose of the diving boards used in the spitzkasten and in settling boxes?

(25) When and why are settling boxes used?

(26) What are the advantages of automatic feeding for rolls and stamps?

(27) On what class of ores (and why) does the Challenge feeder work better than the Telloch feeder, and what relative advantages have both in regard to cost, simplicity, and ease of repair?

(28) (*a*) What are the two general classes of concentrating machinery? (*b*) Name the principal machines of each class.

(29) What are jigs, and for what are they employed?

(30) Explain the sorting action of jigs, and tell how it is accomplished.

(31) If an ore containing galena and blende, with a quartz gangue, is to be jigged to concentrate both the galena and the blende separately, how many compartments should the jig have, and what would be the headings for each compartment?

(32) How is the force of water regulated in jigs?

(33) Describe the construction of a double eccentric.

(34) How do the ordinary Hartz jigs and the quick-return Hartz jigs differ in action?

(35) Describe the Heberle gate, and mention the other forms of discharge employed for removing the concentrates.

(36) What is a stay box, and what is its use?

(37) What are the respective advantages and disadvantages of inward and outward flow buddles, and when both are used in succession, how should they be placed?

(38) How are the headings protected in the Evans buddle?

(39) How does the bumping table work?

(40) Give the principle of vanners, and describe their action.

(41) Give the general construction and describe the separating action of a Wilfley table.

(42) Define paramagnetic and diamagnetic, and give the two general classes of magnetic concentrating machines.

(43) In gold and silver amalgamation, what are the principal sources of gold, silver, and mercury loss?

(44) How is the sickening of mercury remedied when it is due to the formation of metallic oxides?

(45) Name the principal devices for saving float gold and floured amalgam.

(46) How is greasy gold remedied?

(47) How and why are amalgamating pans heated?

(48) If ore is to be amalgamated in pans, why should it be crushed as fine as practicable before being introduced into the pans, and what effect has long grinding in the pan upon the mercury?

(49) What are the principal objections to barrel amalgamation, and how does it compare with the systems of pan amalgamation, such as the Boss process?

(50) What office do salt and bluestone (sulphate of

copper perform in silver amalgamation, and for what object is lime used in the same process?

(51) Why are wooden pans employed when working acid ores?

(52) How may non-amalgamable silver minerals be gotten into an amalgamable form previous to introduction into the pans?

(53) Why is it necessary to use silver-plated plates or to dress new copper plates with amalgam before starting up?

(54) Describe the operation of preparing and cleaning battery and apron plates.

(55) What is meant by sweating and skinning plates, and is the latter advisable?

(56) What is the cause of verdigris, and how may verdigris be removed?

(57) How are apron plates arranged to secure a large amount of amalgamating surface with a limited floor space?

(58) What are crawls, and for what are they used?

(59) For what are elevators used in mills, and what are the differences of construction when they are employed for dry, wet, and hot materials?